2021

BRAKE PADS AND SHOES

FOR MOTORCYCLES, SCOOTERS, DIRT BIKES AND ATV/UTV

ECE R90

sbs
GO AHEAD

HI-TECH BRAKE SOLUTIONS
MADE IN EUROPE



SBSBRAKES.COM

ECE R90

sbs
GO AHEAD

HI-TECH BRAKE SOLUTIONS
MADE IN EUROPE

Your guarantee for reliable OEM replacement quality

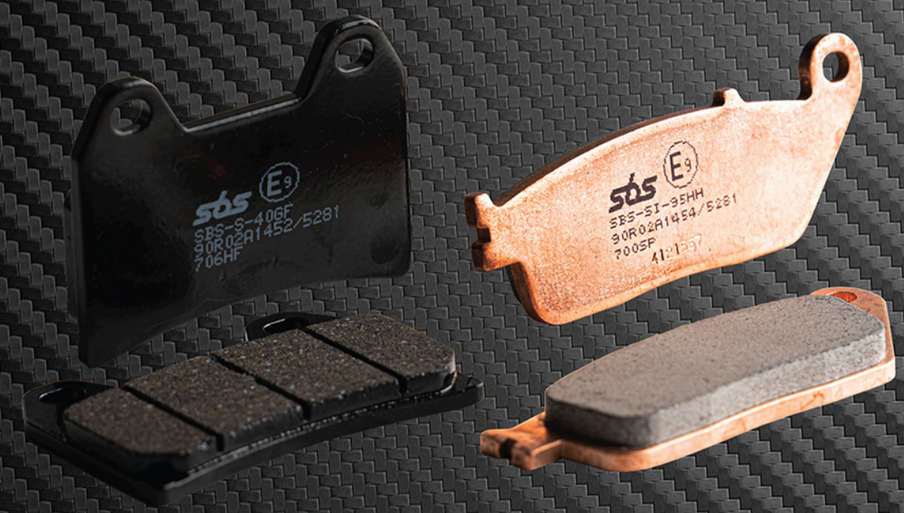

Our SBS brake pads are made in Europe under approval of the ECE R90 regulation that confirms the highest quality in terms of design, manufacturing and performance of the individual brake pads. Go ahead, we've got you covered with braking excellence.

Our promise to SBS riders

- Same or better quality than original equipment manufacturer. Ensured by laboratory and vehicle testing similar to that of homologation for new vehicles.
- Consistent brake pad performance no matter the situation: wet, low and high speeds etc. Tested and documented by the most stringent test standards.
- Same product every time – Ensured by internal quality control and testing following the highest standards.

@sbsbrakes | sbsbrakes.com | #GoAhead

HOW TO CHOOSE YOUR BRAKE PADS

GO AHEAD

THE RIGHT CHOICE FOR YOUR MOTORCYCLE AND YOUR RIDING STYLE.

1. *Choose your motorcycle type "Street Motorcycles", "V-Twin / American Motorcycles", "Off Road / Motocross", "ATV / UTV", "Road Racing", "Street use - scooter".*
2. *Find your "Type of use" in the matching diagram.*
3. *Pick the compound matching your needs and requirements.*
4. *Go to the "Motorcycle Model Applications" section to find your bike and matching SBS brake pad numbers.*

STREET MOTORCYCLES

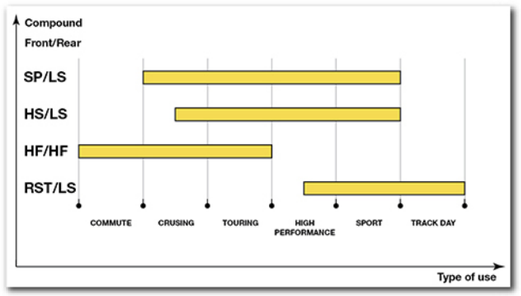

V-TWIN / AMERICAN MOTORCYCLES

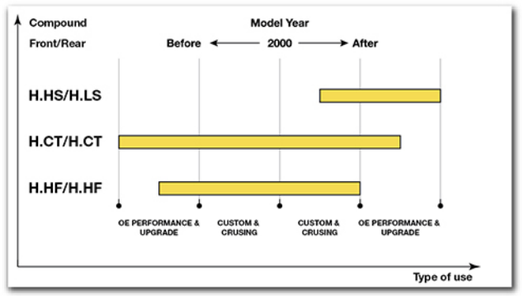

OFF ROAD / MOTOCROSS

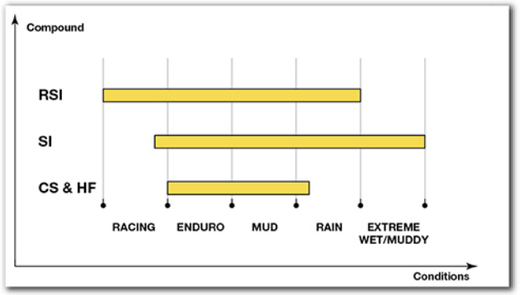

ATV / UTV

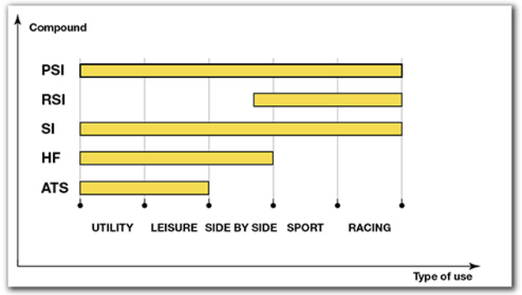

Choose ATS compound for older Arctic Cat and Polaris with **plain steel discs**.

ROAD RACING

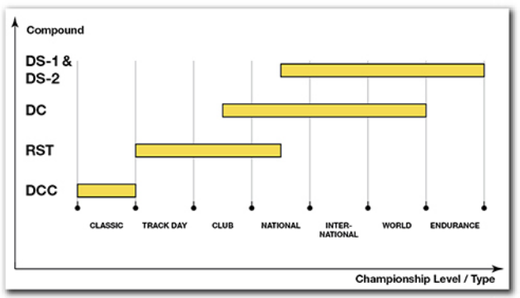

STREET USE – SCOOTER

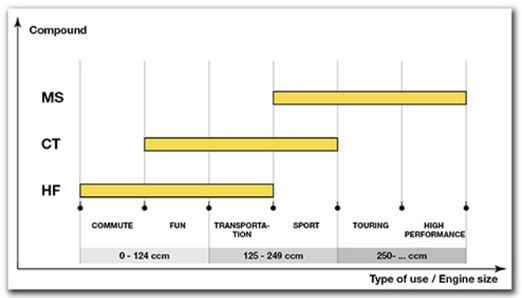

HI-TECH BRAKE SOLUTIONS MADE IN EUROPE SBSBRAKES.COM

NEW! Get the brake feel you want!

GO AHEAD

Find the right brake pad compound for you and your bike with the new Compound Selector at sbsbrakes.com

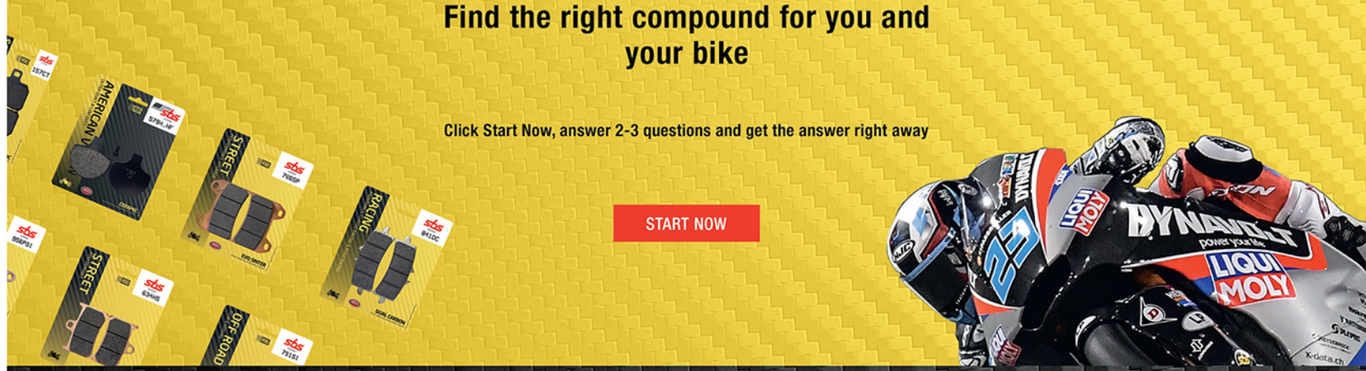



@sbsbrakes | sbsbrakes.com | #GoAhead

HI-TECH BRAKE SOLUTIONS MADE IN EUROPE

CONTENT

2	WELCOME TO SBS
3	BRAKE PADS APPROVED ACCORDING TO ECE R90
4	MODEL LOOK-UP WIDGET & COMPOUND SELECTOR WIDGET
5 – 7	BRAKE PADS STREET
9 – 11	BRAKE PADS AMERICAN
13 – 15	BRAKE PADS SCOOTER
17 – 20	BRAKE PADS RACING
21 – 23	BRAKE PADS OFF ROAD & ATV/UTV
24	BRAKE SHOES WITH SPRINGS
25	BRAKE PINS STAINLESS
26	ACCESSORIES – BRAKE SYSTEM BLEEDER & ANTI-NOISE SHIMS
27 – 29	MERCHANDISE
30	DISPLAYS
31 – 32	FLYERS & POS MATERIAL
33	MOTORCYCLE MODEL APPLICATIONS
34	*Motorcycles, Off Road, ATV/UTV, Scooters*
81	*Motocross*
87	*ATV / UTV*
103	*Racing*
107	*Calipers*
111	BRAKE PAD 1:1 DRAWINGS, COMPOUNDS, FITMENTS
601	BRAKE SHOE DRAWINGS, FITMENTS
643	CROSSLIST BRAKE PADS: SAME SHAPE – DIFFERENT THICKNESS
647	CROSS REFERENCE LIST – OE - SBS
659	BRAKE PIN FITMENTS, DRAWINGS

Make copies or extracts of this catalogue only with permission by SBS Friction A/S. The right to make modifications to the design or model application is reserved. Every effort has been made to ensure correctness of the information contained in this catalogue. However, we will not be responsible for any loss arising from errors or omissions made.

No se permite la copia total o parcial del catálogo sin el permiso de SBS Friction A/S. La empresa se reserva el derecho a realizar modificaciones en el diseño o aplicaciones para determinados modelos. Se ha realizado un gran esfuerzo para garantizar la exactitud de la información que se incluye en este catálogo. Sin embargo, no nos responsabilizaremos de las pérdidas ocasionadas por errores u omisiones.

WELCOME TO SBS

SBS Friction A/S is a Danish-based company that develops, produces and markets brake pads and friction solutions for motorcycles, scooters, ATV/UTVs, special cars and industrial applications including wind turbines.

In addition, our product range includes other brake components such as brake rotors, brake shoes, and accessory parts such as brake pins.

Our history goes back to 1964. In the 1970s we were the first to introduce aftermarket disc brake pads for motorcycles. Since then we have continuously expanded our range, and our market coverage is almost complete no matter make, model or year. We are first with the newest and last with the oldest.

We are number #1 in the European aftermarket for motorcycle brake pads, and all over the globe the SBS name is known for braking excellence. Our total distribution network is spread to around 50 countries around the world including the USA, Canada, Japan, Australia, Singapore, South Africa and across the European Union.

Our customer portfolio comprises motorcycle industry OEMs such as brake system and vehicle manufacturers, and due to our friction knowhow, other industries such as wind turbines manufacturers.

Our headquarters, R&D, production and sales are located in Svendborg, Denmark. Our production plant features around 12,000 m^2 with production lines for ceramic, sintered and carbon material components.

We employ around 200 people and our inventory turnover has increased steadily since we introduced our first brake pad.

Just Go Ahead - We have the power to stop you!

BIENVENIDO A SBS

SBS Friction A/S es una empresa danesa que desarrolla, fabrica y comercializa pastillas de freno y soluciones de fricción para motocicletas, scooter, ATV/UTV, coches especiales y aplicaciones industriales, incluidos generadores eólicos.

Nuestra gama de productos incluye también componentes como discos de freno, zapatas de freno y otros accesorios (por ejemplo, tornillos de freno).

Nuestra historia se remonta a 1964. En la década de 1970 fuimos los primeros en introducir las pastillas de freno de disco en el mercado de piezas de repuesto para motocicletas. Desde entonces hemos seguido ampliando nuestra gama de productos hasta cubrir la práctica totalidad del mercado, con independencia de la marca, el modelo o el año de fabricación. Somos los primeros en ofrecer las novedades y los últimos en retirar los productos más antiguos.

Además de ser el número 1 en el mercado europeo de piezas de repuesto para pastillas de freno de motocicletas, SBS es sinónimo de excelencia en sistemas de frenado en todo el mundo. Nuestra red de distribución se extiende por unos 50 países de todo el mundo, entre ellos Estados Unidos, Canadá, Japón, Australia, Singapur, Sudáfrica y toda la Unión Europea.

Nuestra cartera de clientes incluye fabricantes de equipos originales para motocicletas (por ejemplo, sistemas de frenos) y fabricantes de vehículos, además de fabricantes de otros sectores de la industria, como fabricantes de generadores eólicos, gracias a nuestros conocimientos específicos en materia de fricción.

En nuestra sede de Svendborg (Dinamarca) se encuentran los departamentos de I+D, producción y ventas. Nuestra planta de cerca de 12 000 m2 incorpora líneas de producción de componentes de material cerámico, sinterizado y carbono.

Nuestra plantilla está integrada por cerca de 200 empleados y nuestra facturación ha aumentado de manera constante desde que presentamos nuestra primera pastilla de freno. En la actualidad somos líderes del mercado.

Adelante. Tenemos la fuerza para detenerle.



BRAKE PADS APPROVED ACCORDING TO ECE R90

The ECE R90 regulation specifies design, construction, and performance requirements and test protocols for replacement brake parts for road-approved motor vehicles.

SBS has as an industry first received full approval according to the new ECE R90 regulation. You can see on the product pages (pages 5 – 23) which ones are marked “ECE R90 approved”. All future introductions are designed to meet the approval of the ECE R90 regulation.

Your safety – your benefits
ECE R90 tests speed sensitivity and cold performance. Since the lining is part of the braking system converting the vehicle’s kinetic energy into heat, the lining must be capable of surviving high temperatures without excessive wear (leading to frequent replacement) or outgassing (which causes brake fade, a decrease in the stopping power of the brake).

Furthermore, ECE R90 requires correct marking of the products and sealed packaging.

A factory & test equipment approval is also part of the R90 homologation. It involves a once-a-year inspection and accreditation by engineers. SBS, of course, holds the approval for both manufacturing and testing facilities.

Type-approval to ECE R90 is required for all replacement brake linings throughout the European Union and in non-European countries that have adopted ECE Regulations.

How to test – the practicalities
The brake pads are divided into 3 categories – A, B and C - depending on the friction material, and all compounds are tested individually.

All vehicles recommended for the specific brake pad compound must be calculated according to kinetic energy to find the most severe vehicle for testing.

This way, all compounds and vehicles are checked and the most severe combinations tested on track, for the consumer to get a very safe and secure product.

In short: your guarantee for reliable OEM replacement quality.

We strongly recommend that you always check that the brake pads you chose have the proper ECE R90 approval.

PASTILLAS DE FRENO CON HOMOLOGACIÓN ECE R90

En el reglamento ECE R90 se especifican tanto los requisitos de diseño, fabricación y rendimiento como los protocolos de prueba de las piezas de los frenos de recambio de los vehículos de motor que circulan por carretera.

En SBS hemos sido los primeros en obtener plena homologación con arreglo al nuevo reglamento ECE R90. En las páginas de producto (páginas 5 – 23) pueden verse los que están marcados con “Homologación ECE R90”. Las futuras incorporaciones se diseñarán de manera que cumplan los requisitos de homologación del reglamento ECE R90.

Su seguridad, su beneficio
El reglamento ECE R90 pone a prueba la sensibilidad a la velocidad y el rendimiento en frío. Como la guarnición forma parte del sistema de frenado y convierte la energía cinética del vehículo en calor, la guarnición debe ser capaz de resistir altas temperaturas sin que se produzca un desgaste excesivo (lo que conlleva sustituciones frecuentes) o desgasificación (causante del desvanecimiento de los frenos, equivalente a una reducción de la potencia de frenado del freno).

Asimismo, el reglamento ECE R90 exige que los productos estén marcados de manera correcta y se precinten los envases.

La aprobación de la fábrica y el equipo de prueba también forman parte de la homologación R90. Esto conlleva la inspección y la acreditación de la fábrica una vez al año por parte de ingenieros. Las instalaciones de pruebas y fabricación de SBS están homologadas.

En la Unión Europea y en los países extraeuropeos que hayan adoptado los reglamentos ECE se exige que las guarniciones de los frenos de recambio tengan la homologación ECE R90.

Cómo se prueban: aspectos prácticos
Las pastillas de freno se dividen en 3 categorías (A, B y C) dependiendo del área del material de fricción y todos los compuestos se prueban por separado.

En todos los vehículos en los que se recomiendan pastillas de freno concretas, el compuesto debe calcularse en función de la energía cinética para encontrar el vehículo con condiciones más estrictas para las pruebas.

De esta forma, se comprueban todos los compuestos y vehículos y se prueban en pista las combinaciones más exigentes con el fin de ofrecer al consumidor un producto muy seguro y estable.

En resumen, se garantiza un recambio OEM fiable y de calidad.

Es muy recomendable comprobar siempre que las pastillas de freno que se eligen tengan la homologación ECE R90 adecuada.



MODEL LOOK-UP WIDGET

USE THE MODEL LOOK-UP WIDGET AT WWW.SBSBRAKES.COM

Go online and find the best brake products for exactly your bike.
// Go to www.sbsbrakes.com
// Select your specific bike model, year and CCM (in random order)
// The brake pads, brake rotors and clutch kits that match your bike will be listed (recommended and optional)

Go Ahead!

WIDGET DE CONSULTA DE MODELOS

UTILICE EL WIDGET DE CONSULTA DE MODELOS QUE SE ENCUENTRA EN WWW.SBSBRAKES.COM

Conéctese y encuentre los mejores productos de frenado para su moto.
// Vaya a www.sbsbrakes.com
// Seleccione el modelo de moto concreto, el año y la cilindrada (en orden aleatorio)
// Aparecerá una lista con las pastillas de freno, los discos de freno y los kits de embrague que puede utilizar su moto (recomendados y optativos)

¡Adelante!

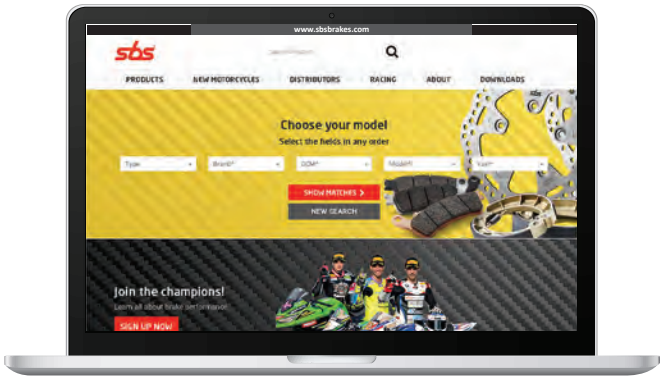

**ANY MAKE.
ANY MODEL.
ANY YEAR.**

Go online and find exactly what you need.
Use the Model Look-up widget at www.sbsbrakes.com

COMPOUND SELECTOR WIDGET

USE THE COMPOUND SELECTOR AT WWW.SBSBRAKES.COM

Go online and find the ideal brake compound for your bike type and need.
// Go to www.sbsbrakes.com
// Select your specific bike type, touring conditions and size
// The right compound type that matches your bike type and need will be listed for front and rear

Go Ahead!

WIDGET DEL SELECTOR DE COMPUESTO

UTILICE EL WIDGET DEL SELECTOR DE COMPUESTO QUE SE ENCUENTRA EN WWW.SBSBRAKES.COM

Conéctese y encuentre el compuesto de freno ideal para su tipo de motocicleta y sus necesidades.
// Vaya a www.sbsbrakes.com
// Seleccione el tipo de motocicleta, las condiciones de uso y el tamaño concretos
// Se indicará el tipo de compuesto adecuado al tipo de motocicleta y a sus necesidades para la parte delantera y la parte trasera

¡Adelante!

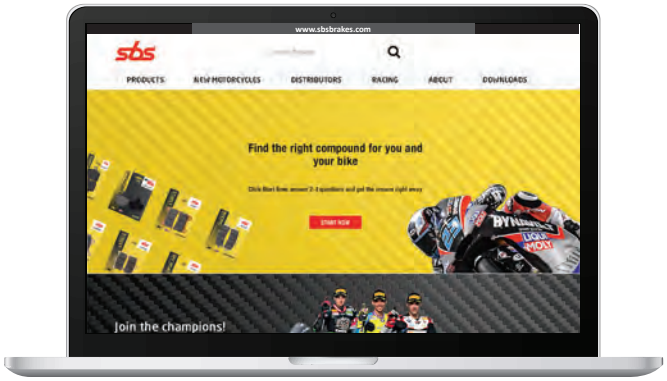

GET THE BRAKE FEEL YOU WANT!

Go online and find the right compound for you and your bike.
Use the Compound Selector widget at www.sbsbrakes.com



LICENSE TO ADVENTURE
#STREETMOTORCYCLE

If a street bike is your favorite. If you are dedicated to touring and adventures on weekends and holidays. If you enjoy the freedom of motorcycle riding. Or if you are commuting every day.

Then SBS STREET brake pads are the right choice for you. Our STREET compounds are developed to match all makes, models and year of street bikes on the market – front and rear.

All brake pads are ECE R90 approved.

They give you the performance, durability and comfort that you need to GO AHEAD.

Choose between:
// PERFORMANCE – HS / LS
// PERFORMANCE UPGRADE – SP
// STANDARD – HF

Follow our recommendations for the ideal pads for your bike.

Si prefiere la motocicleta de calle. Si reserva los fines de semana y las vacaciones para el turismo y la aventura. Si disfruta de la libertad que da pilotar una motocicleta. O si utiliza la motocicleta a diario.

Entonces, las pastillas de freno SBS STREET son perfectas para usted. Nuestros compuestos STREET se adecuan a motocicletas de calle de todas las marcas, modelos y años que hay en el mercado, sin excepción.

Todas las pastillas de freno tienen la homologación ECE R90.

Ofrecen el rendimiento, la duración y el confort que necesita para SEGUIR ADELANTE.

Puede elegir entre:
// PERFORMANCE – HS / LS
// PERFORMANCE UPGRADE – SP
// STANDARD – HF

Para acertar con las pastillas de su motocicleta, siga nuestras recomendaciones.

sbs®
GO AHEAD

PERFORMANCE



ECE R90

HS - SINTER

FRONT / DELANTE

// OE replacement compound for bikes with sintered pads
// Designed for modern high performance, sport, big touring and adventure bikes
// Sintered compound formulated for low wear, high thermal stability, excellent brake feel and easy modulation
// HH rated performance, developed in racing and fine-tuned for street use
// Excellent for stainless steel or cast iron brake rotors
// Front (HS) and rear (LS) compounds for ideal brake balance, to avoid over-braking of rear-wheel

// Compuesto de recambio original y mejorado para motocicletas con pastillas sinterizadas
// Diseñado para utilizarse en motocicletas modernas de altas prestaciones, deportivas, gran turismo y adventure
// Compuesto sinterizado formulado para garantizar poco desgaste, alta estabilidad térmica, excelente sensación de frenado y fácil modulación
// Líder en el sector y alto rendimiento, desarrollado en competición y adaptado para el uso en la calle
// Excelente para rotores/discos de freno de acero inoxidable o hierro fundido
// Compuestos delantero (HS) y trasero (LS) que permiten un reparto de la frenada perfecto para evitar el bloqueo de la rueda trasera



Brake performance diagrams to be compared individually within STREET compounds only.

ECE R90

LS - SINTER

REAR / POSTERIOR

// OE replacement compound for bikes with sintered pads
// Designed for modern high performance, sport and big touring bikes
// Sintered compound offering predictable and controllable performance for rear wheel use
// Exclusive rear wheel compound formulated according to OEM concept offering ideal front/rear brake balance, to avoid over-braking of rear-wheel

// Compuesto de recambio original para motocicletas con pastillas sinterizadas
// Diseñado para utilizarse en motocicletas modernas de altas prestaciones, motocicletas deportivas y gran turismo
// Compuesto sinterizado que ofrece resultados predecibles y controlables en la rueda trasera
// Exclusivo compuesto para la rueda trasera formulado según el concepto del fabricante original, que ofrece un perfecto reparto de la frenada entre la parte delantera y la trasera para evitar frenadas bruscas y el bloqueo de la rueda trasera



Diagramas de potencia de freno para comparar de forma individual los compuestos de STREET exclusivamente.

PERFORMANCE UPGRADE / STANDARD



SP - EVO SINTER

FRONT / DELANTE

// OE replacement and upgrade compound for modern cruisers, sport, adventure & touring bikes
// State-of-the-art conductive sintered EVO compound formulated for strong initial bite to give instant brake feel, easy modulation and powerful in-stop performance
// Fade free, consistent and reliable performance under extreme riding conditions and throughout brake pad lifetime
// High thermal stability in combination with long pad durability and very low brake rotor wear
// Exceeds HH friction rating
// NUCAP NRS technology secures a mechanical and indestructible bonding of the compound – first time ever used on a sinter compound pad
// Front (SP) and rear (LS) compounds for ideal brake balance, to avoid over-braking of rear-wheel

// Compuesto de recambio original y mejorado para motocicletas modernas adventure y cruisers, de altas prestaciones, para carretera, deportivas y de turismo
// Compuesto EVO con sinterizado conductivo de vanguardia, formulado para lograr una mordida inicial enérgica con sensación inmediata de frenado, fácil modulación y altas prestaciones en las paradas
// Resistente al desgaste con rendimiento constante y fiable en condiciones de conducción extremas y durante toda la vida útil de la pastilla de freno
// Alta estabilidad térmica junto con larga duración de la pastilla y desgaste del disco de freno muy reducido
// Tecnología NUCAP NRS que garantiza una adherencia mecánica e indestructible del compuesto
// Compuestos delantero (SP) y trasero (LS) que permiten un reparto de la frenada perfecto para evitar el bloqueo de la rueda trasera



Brake performance diagrams to be compared individually within STREET compounds only.

HF - CERAMIC

FRONT / DELANTE • REAR / POSTERIOR

// OE replacement compound for bikes with non-sintered pads
// Designed for commuters, general-purpose street and cruiser bikes
// Ceramic compound offers long pad life, low dust and low brake rotor wear
// Excellent, consistent performance in wet and dry conditions
// NUCAP NRS technology secures a mechanical and indestructible bonding of the compound
// Innovative noise-reduction technology for high comfort and low development of noise

// Compuesto de recambio original para motocicletas con pastillas no sinterizadas
// Diseñado para motocicletas urbanas, motocicletas de calle polivalentes y cruisers,
// Compuesto cerámico que garantiza una larga duración de la pastilla, poco polvo y un menor desgaste del rotor/disco de freno
// Prestaciones excelentes y uniformes tanto en seco como en mojado
// Tecnología NUCAP NRS que garantiza una adherencia mecánica e indestructible del compuesto
// Innovadora tecnología de reducción del ruido que mejora el confort y reduce la emisión de ruido

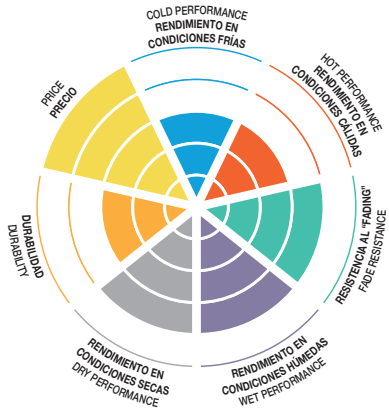

Diagramas de potencia de freno para comparar de forma individual los compuestos de STREET exclusivamente.





LICENSE TO FREEDOM
#VTWIN

If you have a passion for the American lifestyle, and the unique design and characteristics of the famous American motorcycle brands such as Harley Davidson, Victory and Indian, then SBS has the answer to your brake needs.

Our range of brake pads developed especially for American-made motorcycles features compounds that unite high power with low noise and long lifetime. Our range has full coverage - vintage models back from the 80s as well as brand new American-built bikes.

All brake pads are ECE R90 approved.

Choose between:
// HIGH PERFORMANCE & NO DUST – H.HS / H.LS
// HIGH POWER & NOISE REDUCTION FORMULA – H.CT
// ULTRA QUIET & LOW DUST – H.HF

Follow our recommendations for the ideal pads for your bike.

Si le apasiona el estilo de vida americano y el diseño y las características exclusivas de marcas de motocicletas tan legendarias como Harley Davidson, Buell e Indian, SBS tiene los frenos que necesita.

Nuestra gama de pastillas de freno creada especialmente para las motocicletas americanas incorpora compuestos que combinan alta potencia con poco ruido y larga vida útil. Nuestra gama abarca tanto los modelos clásicos de la década de 1980 como los modelos más modernos de motocicletas americanas.

Todas las pastillas de freno tienen la homologación ECE R90.

Puede elegir entre:
// HIGH PERFORMANCE & NO DUST – H.HS / H.LS
// HIGH POWER & NOISE REDUCTION FORMULA – H.CT
// ULTRA QUIET & LOW DUST – H.HF

Para acertar con las pastillas de su motocicleta, siga nuestras recomendaciones.

sbs®
GO AHEAD

HIGH PERFORMANCE & NO DUST



ECE R90

H.HS - SINTER

FRONT / DELANTE

// OE replacement HH rated compound for bikes with sintered pads
// Designed for modern high performance, sport and big touring bikes
// Sintered compound formulated for low wear, high thermal stability and excellent brake feel
// Excellent for stainless steel or cast iron brake rotors and keeps your whitewalls clean
// Front (H.HS) and rear (H.LS) compounds for ideal brake balance, to avoid over-braking of rear-wheel

// Compuesto de recambio original y mejorado para motocicletas con pastillas sinterizadas
// Diseñado para utilizarse en motocicletas modernas de altas prestaciones, motocicletas deportivas y gran turismo
// Compuesto sinterizado formulado para garantizar poco desgaste, alta estabilidad térmica y excelente sensación de frenado
// Excelente para rotores/discos de freno de acero inoxidable o hierro fundido
// Compuestos delantero (H.HS) y trasero (H.LS) que permiten un reparto de la frenada perfecto para evitar el bloqueo de la rueda trasera



Brake performance diagrams to be compared individually within AMERICAN compounds only.



ECE R90

H.LS - SINTER

REAR / POSTERIOR

// OE replacement compound for bikes with sintered pads
// Designed for modern high performance, sport and big touring bikes
// Sintered compound offering predictable and controllable performance for rear wheel use
// Exclusive rear-wheel compound formulated according to OEM concept, to offer ideal front/rear brake balance, to avoid over-braking of rear-wheel

// Compuesto de recambio original para motocicletas con pastillas sinterizadas
// Diseñado para utilizarse en motocicletas modernas de altas prestaciones, motocicletas deportivas y gran turismo
// Compuesto sinterizado que ofrece resultados predecibles y controlables en la rueda trasera
// Exclusivo compuesto para la rueda trasera formulado según el concepto del fabricante original, que ofrece un perfecto reparto de la frenada entre la parte delantera y la trasera para evitar frenadas bruscas y el bloqueo de la rueda trasera



Diagramas de potencia de freno para comparar de forma individual los compuestos de AMERICAN exclusivamente.

HIGH POWER & NOISE REDUCTION FORMULA / ULTRA QUIET & LOW DUST



H.CT - CARBON

FRONT / DELANTE • REAR / POSTERIOR

// Performance upgrade compound, excellent for bikes with customized brake system and rotors
// Compatible with stainless steel, cast iron, chromed and polished brake rotors
// HH-rated performance, developed in racing and fine-tuned for street use
// Unmatched feel and control at brake lever in wet and dry conditions
// NUCAP NRS technology secures a mechanical and indestructible bonding of the compound
// Noice reduced

// Compuesto con mejora de rendimiento, excelente para motocicletas con discos y sistemas de frenos personalizados
// Compatible con discos de freno de acero inoxidable, hierro fundido, cromados y pulidos
// Prestaciones HH, desarrollado en competición y adaptado para el uso en la calle
// Sensación y control inigualables en la maneta de freno tanto en seco como en mojado
// Tecnología NUCAP NRS que garantiza una adherencia mecánica e indestructible del compuesto
// Ruido reducido

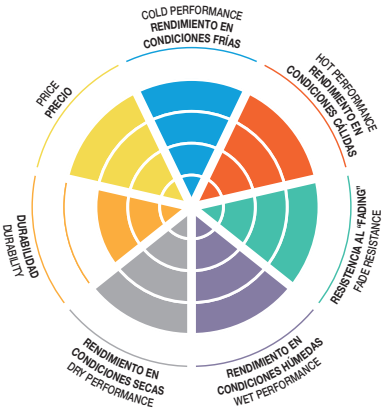

Brake performance diagrams to be compared individually within AMERICAN compounds only.



H.HF - CERAMIC

FRONT / DELANTE • REAR / POSTERIOR

// OE replacement compound for bikes with non-sintered pads
// Designed for commuters, general-purpose street and cruiser bikes
// Ceramic compound offers long pad life, low dust and low brake rotor/rotor wear
// Excellent, consistent performance in wet and dry conditions
// NUCAP NRS technology secures a mechanical and indestructible bonding of the compound
// Innovative noise-reduction technology for high comfort and low development of noise

// Compuesto de recambio original para motocicletas con pastillas no sinterizadas
// Diseñado para motocicletas urbanas, motocicletas de calle polivalentes y cruisers
// Compuesto cerámico que garantiza una larga duración de la pastilla, poco polvo y un menor desgaste del rotor/disco de freno
// Prestaciones excelentes y uniformes tanto en seco como en mojado
// Tecnología NUCAP NRS que garantiza una adherencia mecánica e indestructible del compuesto
// Innovadora tecnología de reducción del ruido que mejora el confort y reduce la emisión de ruido

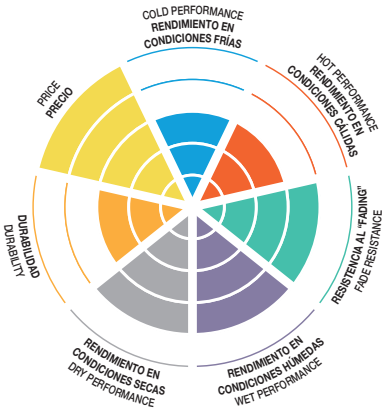

Diagramas de potencia de freno para comparar de forma individual los compuestos de AMERICAN exclusivamente.





LICENSE TO HAVE FUN
#URBANMOBILITY

When it comes to city traffic, a scooter is often the ideal vehicle. In dense traffic you have to rely on your brakes. The SBS scooter brake pads offer the ideal brake performance and durability for this environment.

We offer different compounds for different kinds of scooters and riding needs. Our market coverage is wide with pads and compounds to fit small 50 cc models all the way to modern, high-performance maxi scooters.

Most brake pads are ECE R90 approved.

Choose between:
// MAXI SINTER – MS
// STANDARD & MAXI – CT
// STANDARD & MAXI – HF

Follow our recommendations for the ideal pads for your scooter.

El scooter suele ser el vehículo perfecto para desplazarse por la ciudad. Con tráfico denso, es esencial disponer de unos frenos fiables. Las pastillas de freno para scooter de SBS ofrecen unas prestaciones de frenado y una durabilidad perfectas en ciudad.

Ofrecemos compuestos diferentes que se adecuan a la mayoría de los tipos de scooter y de las necesidades de conducción. Tenemos una oferta comercial amplia que incluye pastillas y compuestos para diferentes modelos, desde scooters pequeños de 50 cc hasta maxi scooters modernos de altas prestaciones.

La mayoría de las pastillas de freno tienen la homologación ECE R90.

Puede elegir entre:
// MAXI SINTER – MS
// STANDARD & MAXI – CT
// STANDARD & MAXI – HF

Para acertar con las pastillas de su scooter, siga nuestras recomendaciones.

sbs®
GO AHEAD

MAXI SINTER / STANDARD & MAXI



ECE R90

MS - SINTER

FRONT / DELANTE • REAR / POSTERIOR

// High performance upgrade sintered compound for Maxi scooters from 250 cc and up
// Recommended for Maxi scooters equipped with motorcycle technology
// State-of-the-art sintered compound formulated for low wear, high thermal stability and excellent brake feel

// Compuesto sinterizado mejorado de alto rendimiento para maxi scooters (de 250 cc en adelante)
// Recomendado para maxi scooters con tecnología de motocicleta
// Compuesto sinterizado de vanguardia formulado para garantizar poco desgaste, alta estabilidad térmica y excelente sensación de frenado



Brake performance diagrams to be compared individually within SCOOTER compounds only.

ECE R90

NRS SAFE

CT - CARBON

FRONT / DELANTE • REAR / POSTERIOR

// Performance upgrade carbon compound for medium size scooters 125-249 cc
// Recommended for sporty riding, everyday transportation and fun
// NUCAP NRS technology secures a mechanical and indestructible bonding of the compound

// Compuesto de carbono con mejora de rendimiento para scooters de tamaño mediano (125-249 cc)
// Recomendado para pilotaje deportivo, transporte diario y entretenimiento
// Tecnología NUCAP NRS que garantiza una adherencia mecánica e indestructible del compuesto



Diagramas de potencia de freno para comparar de forma individual los compuestos de SCOOTER exclusivamente.

STANDARD & MAXI



HF - CERAMIC

FRONT / DELANTE • REAR / POSTERIOR

// OE replacement ceramic compound for small and medium size scooters 50-124 cc
// Recommended for commuters and general-purpose street riding
// NUCAP NRS technology secures a mechanical and indestructible bonding of the compound

// Compuesto cerámico de recambio original para scooters de tamaño pequeño y mediano (50-124 cc)
// Recomendado para pilotar motocicletas urbanas y motocicletas de calle polivalentes
// Tecnología NUCAP NRS que garantiza una adherencia mecánica e indestructible del compuesto







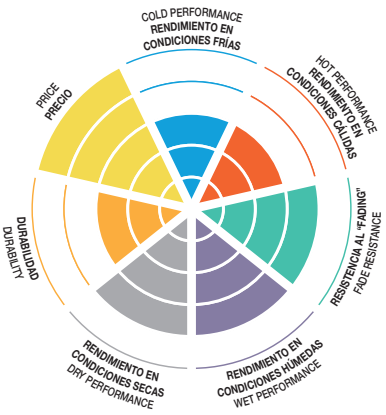

Brake performance diagrams to be compared individually within SCOOTER compounds only.

Diagramas de potencia de freno para comparar de forma individual los compuestos de SCOOTER exclusivamente.

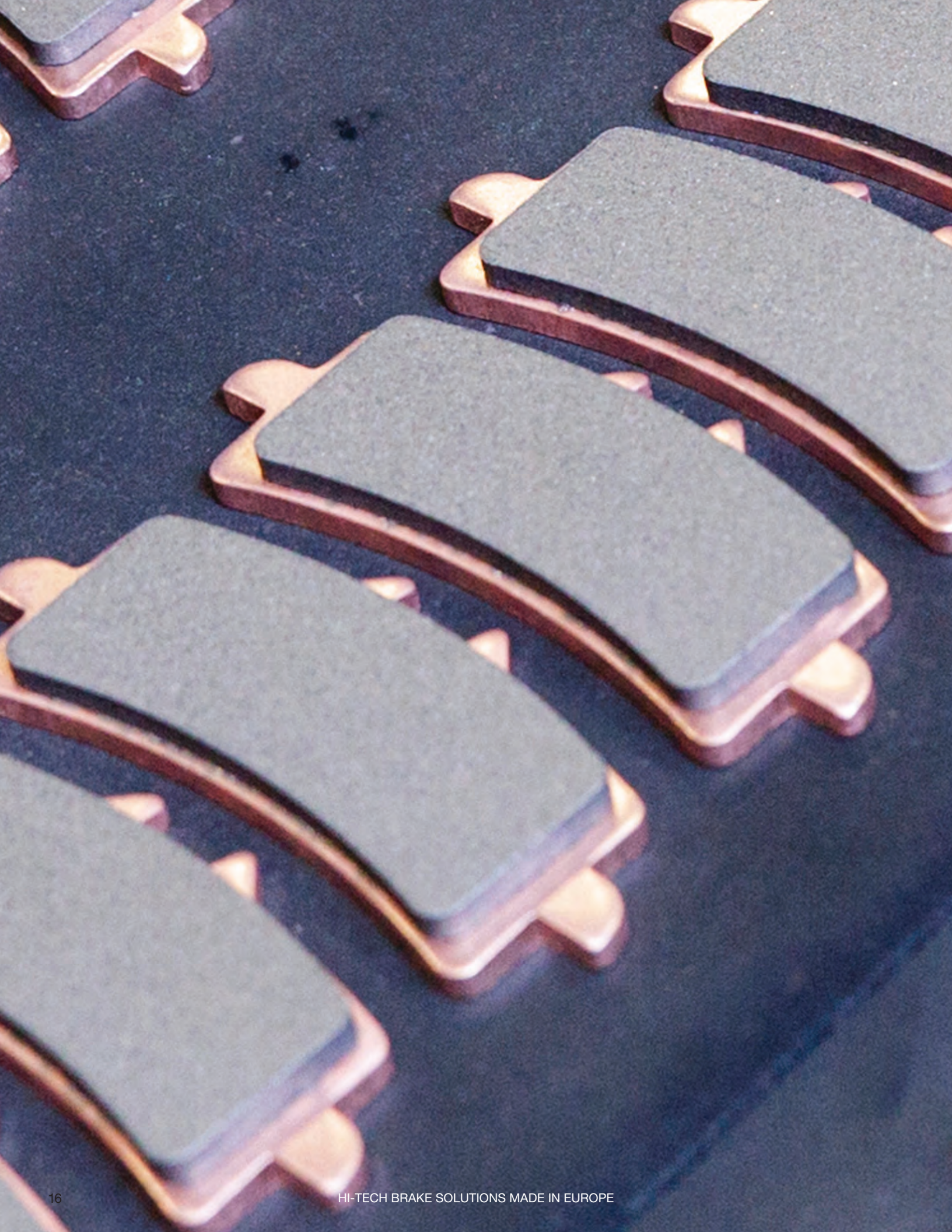

LICENSE TO WIN
#ROADRACING



For more than 25 years racing has been part of our DNA.

Through our Partners in Racing concept, we deliver the stopping power to the best of the best in racing. Whether it comes to international top level road racing such as World Superbike, Supersport , Endurance, The Isle of Man TT, National competitions, track days or classic road racing, SBS offers you the brake pads you need for gaining that important 100th of a second over the competition. Our race compounds are specially developed for competition and race track use – tested and approved by some of the best World Championship riders.

Full blood race pads cannot be ECE R90 approved. All racing pads other than LS are enforced with NUCAP NRS technology.

Choose between:
// DYNAMIC RACING CONCEPT – DS-1 & DS-2
// ROAD RACING & CLASSIC RACING – DC / DCC
// ROAD RACING & TRACK DAYS – RST
// RACING REAR – RQ / LS

Follow our recommendations for the ideal pads for your bike.

Las carreras forman parte de nuestro ADN desde hace más de 25 años.

A través de nuestros colaboradores del Racing concept, ofrecemos potencia de frenado a los mejores pilotos de competición del mundo. Ya se trate carreras internacionales de primer nivel, como Superbike, Supersport o Endurance, competiciones nacionales, tandas en circuito o carreras clásicas en carretera, SBS ofrece pastillas de freno con las que se pueden ganar centésimas de segundo importantes durante la frenada. Nuestros compuestos de carreras se han desarrollado especialmente para el uso en competición y en circuitos de carreras. Han sido probados y aprobados por algunos de los mejores pilotos del Campeonato del Mundo.

Las pastillas de carreras no pueden tener la homologación ECE R90. Salvo LS, todas las pastillas de carreras se realizan con tecnología NUCAP NRS.

Puede elegir entre:
// DYNAMIC RACING CONCEPT – DS-1 & DS-2
// ROAD RACING & CLASSIC RACING – DC / DCC
// ROAD RACING & TRACK DAYS – RST
// RACING REAR – RQ / LS

Para acertar con las pastillas de su motocicleta, siga nuestras recomendaciones.

sbs® GO AHEAD

ROAD RACING & ENDURANCE / ENDURANCE, CLASSIC RACING & ROAD RACING



RACING
ROAD RACING

DS-1 & DS-2
DYNAMIC RACING CONCEPT

FRONT / DELANTE - FOR RACE USE ONLY

// The choice of numerous World Champions in Superbike, Supersport, Moto2 and Endurance
// High-tech sintered compound available for racing & standard brake systems used in racing
// DS-1 with an aggressive initial bite features and linear predictable in-stop performance
// DS-2 with a smooth initial bite and progressive in-stop performance
// A combination (left and right) of the two compounds makes fine tuning of braking performance possible
// NUCAP NRS technology secures mechanical bonding

// La alternativa elegida por numerosos campeones del mundo de Superbike, Supersport, Moto2 y Resistencia
// Compuesto sinterizado de alta tecnología disponible para sistemas de frenos de carreras y convencionales que se usan en competición
// DS-1: Si se prefiere una fuerte mordida inicial y un rendimiento gradual
// DS-2: Si se prefiere una mordida inicial suave y un rendimiento progresivo
// Ahora es posible combinar los dos compuestos: Disco de freno izquierdo DS-1 y disco de freno derecho DS-2. Esto ofrece una combinación de las diferentes características de rendimiento de los dos compuestos. En definitiva, un ajuste fino del rendimiento de frenado según las preferencias de frenado de cada piloto
// Tecnología NUCAP NRS que garantiza una adherencia mecánica e indestructible del compuesto



Brake performance diagrams to be compared individually within RACING compounds only.



DC - DUAL CARBON

FRONT / DELANTE - FOR RACE USE ONLY

// The upgrade choice for Superbike, Supersport and Superstock racers in National Championship as well as for Track Day riders
// High-tech carbon compound developed for racing and standard brake systems used for race and sport bikes
// Low heat transfer rate protects brake system and brake fluid against extreme temperatures
// Smooth initial bite, progressive in-stop performance with excellent brake lever feel and modulation
// DEST technology used for pre-bedding of the compound to eliminate fade and secure consistent performance
// NUCAP NRS technology secures a mechanical and indestructible bond between the compound and backing plate
// Laser cut backing plate to prevent deformation

// La alternativa mejorada para pilotos de Superbike, Supersport y Superstock que corren en campeonatos nacionales así como para las tandas en circuitos
// Compuesto de carbono de alta tecnología desarrollado para sistemas de frenos de carreras y convencionales que se utilizan en motocicletas de carreras y deportivas
// Bajo coeficiente de transferencia de calor que protege el sistema de frenos y el líquido de frenos frente a las temperaturas extremas
// Mordida inicial suave y rendimiento en parada progresivo con modulación y sensibilidad excelentes en la maneta de freno
// Uso de la tecnología DEST para lograr el preasentamiento del componente con el fin de evitar el desgaste y garantizar un rendimiento constante
// Tecnología NUCAP NRS que garantiza una adherencia mecánica e indestructible del compuesto

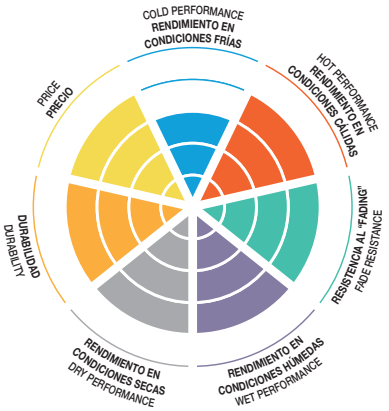

Diagramas de potencia de freno para comparar de forma individual los compuestos de RACING exclusivamente.

ENDURANCE, CLASSIC RACING & ROAD RACING / ROAD RACING & TRACKDAYS



RACING
CLASSIC ROAD RACING

DCC - DUAL CARBON

FRONT / DELANTE - FOR RACE USE ONLY

// The choice for classic road racing derived from more than 25 years of experience in World Championship racing and inspired by our championship winning DC Dual Carbon material
// Smooth initial bite, ideal for classic front fork construction and tires. Progressive brake performance offering superior power and front-end feel
// Thermal stability, suitable for single or dual rotor set-up. Compatible with stainless steel and cast iron brake rotors
// Low thermal conductivity reduces thermal load to seals, brake fluid and caliper parts
// DEST technology used for pre-bedding of the compound to eliminate fade and secure consistent performance
// NUCAP NRS technology secures a mechanical and indestructible bonding of the compound
// Laser cut backing plate to prevent deformation

// La elección para carreras clásicas en carretera gracias a los más de 25 años de experiencia en el Campeonato del Mundo e inspirada en nuestro material DC (Dual Carbon), ganador del mundial
// Mordida inicial suave, ideal para la configuración clásica de horquilla delantera y las llantas Prestaciones de frenado progresivas con mayor potencia y mejor tacto en la rueda delantera
// Estabilidad térmica, adecuada para la configuración de 1 y 2 discos Compatible con discos de freno de hierro fundido y acero inoxidable
// Escasa conductividad térmica que reduce la carga térmica en las juntas, el líquido de frenos y las pinzas de freno
// Uso de la tecnología DEST para lograr el preasentamiento del componente con el fin de evitar el desgaste y garantizar un rendimiento constante
// Tecnología NUCAP NRS que garantiza una adherencia mecánica e indestructible del compuesto

Due to the unique nature of the DCC compound, formulated especially for vintage racing, it is not possible to compare to other products.

El carácter singular del compuesto DCC no permite compararlo con otros productos, ya que se trata de un compuesto formulado especialmente para coches clásicos de carreras.



ECE R90

RST - SINTER

FRONT / DELANTE

// The ideal and affordable choice for track days and club racing. Can be used for street riding
// Sintered compound available for modern sportbike standard brake systems
// Excellent for stainless steel or cast iron brake rotors
// Strong initial bite, linear in-stop performance with good brake feel and control

As of 2020 the RST range replaced RS pads 1:1, when it comes to specializing applications. However, with increased braking power and even better brake feel and control. Riders just have to be aware of a slightly increased bedding-in time compared to RS due to the increased durability. All RST pads are enforced with NRS. The NRS (Nucap Retension System) is an advanced mechanical bonding technology based on a matrix of steel hooks raised from the backing plate steel material. The NRS hooks mold into the friction material creating an indestructible and corrosion safe mechanical bond without any use of adhesives. Main advantages of NRS technology:
// No separation between the back plate and friction material
// No lifting edges of the friction material giving a firm lever feel
// No vibration between the friction material and back plate

// La elección perfecta y económica para las tandas en circuito y para motocicletas mixtas para circuito y carretera
// Compuesto sinterizado disponible para los modernos sistemas de frenos convencionales de las motocicletas de competición y deportivas
// Excelente para rotores/discos de freno de acero inoxidable o hierro fundido
// Mordida inicial enérgica y rendimiento en parada gradual con buena sensación y control de frenado

A partir de 2020, la gama RST ha reemplazado a las pastillas RS 1:1 en cuanto a adaptación de aplicaciones. Sin embargo, ofrece mayor potencia de frenado e incluso mejor sensación y control de frenado. A los pilotos les basta saber que el tiempo de asentamiento es ligeramente mayor que en el caso de RS debido a la elevada durabilidad. Todas las pastillas RST se realizan con NRS. NRS (Nucap Retention System) es una tecnología de adherencia mecánica avanzada que se basa en una matriz de ganchos de acero construida a partir del material de acero de la placa posterior. Los ganchos NRS se adaptan al material de fricción y crean una unión mecánica anticorrosión e indestructible sin el uso de adhesivos. Principales ventajas de la tecnología NRS:
// Ausencia de separación entre la placa posterior y el material de fricción
// Ausencia de deformación de los bordes del material de fricción que proporciona sensación de firmeza
// Ausencia de vibración entre el material de fricción y la placa posterior

ENDURANCE, CLASSIC RACING & ROAD RACING



RQ - CARBON TECH

REAR / POSTERIOR

// Rear brake carbon compound with high brake performance
// Excellent feel and control to use rear brake steering into turns and handle the bike out of turns

// Compuesto de carbono para el freno trasero con altas prestaciones de frenado
// Sensación y control excelentes para gestionar la frenada en curvas



LS - SINTER

REAR / POSTERIOR

// Rear brake sintered compound with medium brake performance and long pad life
// Recommended for riders using the rear brake occasionally or only slightly entering the turns

// Compuesto sinterizado para el freno trasero con prestaciones de frenado de nivel medio y larga duración de la pastilla
// Recomendado para pilotos que utilizan el freno trasero de manera esporádica o ligeramente al entrar en curvas



LICENSE TO ACTION
#OFFROADBIKE

Enjoying the freedom in the desert. Conquering rocks and mountains. Racing down the dirt track for podium positions.

When riding off road is your passion, SBS offers you the ideal brake compound for the aggressive environment of sand, dust, mud and water. Whether on motorcycle, ATV or UTV.

Choose between our racing pads for competition at all levels or the alternatives when riding off road for leisure and fun. Our range covers all off road makes and models and of course for both front and rear applications.

Most brake pads are ECE R90 approved.

Choose between:
// UPGRADE & RACING – RSI / PSI
// CLUB, TRAILS & LEISURE – SI / CS / ATS

Follow our recommendations for the ideal pads for your bike.

Disfrutar de la libertad en el desierto. Conquistar colinas y montañas. Recorrer pistas de tierra a gran velocidad para llegar a lo más alto en las competiciones.

Si su pasión es el off-road, SBS ofrece el compuesto de freno ideal para entornos agresivos con gran cantidad de arena, polvo, barro y agua. En motocicleta, ATV o UTV.

Puede elegir pastillas de carreras para competir a todos los niveles o bien pastillas alternativas para salidas de ocio. Nuestra gama cubre todas las marcas y modelos todoterreno, así como las aplicaciones delantera y trasera.

La mayoría de las pastillas de freno tienen la homologación ECE R90.

Puede elegir entre:
// UPGRADE & RACING – RSI / PSI
// CLUB, TRAILS & LEISURE – SI / CS / ATS

Para acertar con las pastillas de su motocicleta, siga nuestras recomendaciones.

sbs®
GO AHEAD

RACING / CLUB, TRAILS & LEISURE



RSI - SINTER

FRONT / DELANTE • REAR / POSTERIOR

// Performance upgrade choice of MX GP World Championship MX GP and MX2 teams and riders
// Sintered compound formulated for high thermal stability, powerful and predictable fade-free performance
// Compatible with OE standard brake rotors and specially designed racing rotors

// Alternativa con mejora de prestaciones elegida por equipos y pilotos del Campeonato del Mundo de MX GP y MX2
// Compuesto sinterizado formulado para ofrecer alta estabilidad térmica, potencia y resultados predecibles sin desgaste
// Compatible con discos de frenos estándar originales y discos para frenos de carreras con diseño especial



Brake performance diagrams to be compared individually within OFF ROAD compounds only.

SI - SINTER

FRONT / DELANTE • REAR / POSTERIOR

// The upgrade choice for muddy, wet or sandy conditions
// Sintered compound formulated for extended service intervals, high performance and easy modulation
// Class-leading smooth performance developed in racing under severe conditions

// La alternativa moderna para lugares con mucho barro, humedad o arena
// Compuesto sinterizado formulado para ofrecer largos periodos de vida útil, alto rendimiento y fácil modulación
// Rendimiento estable de primer nivel desarrollado en carrera en condiciones rigurosas

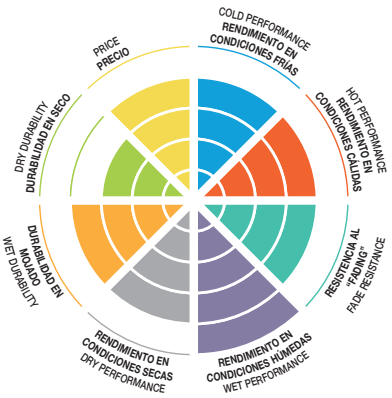

Diagramas de potencia de freno para comparar de forma individual los compuestos de OFF ROAD exclusivamente.

CLUB, TRAILS & LEISURE



PSI - EVO SINTER

FRONT / DELANTE • REAR / POSTERIOR

// Ultimate upgrade compound for ATVs and UTVs
// State-of-the-art conductive sintered EVO compound formulated for strong initial bite to give instant brake feeling, easy modulation and powerful in-stop performance
// Fade free, consistent and reliable performance under extreme conditions and throughout brake pad lifetime
// NRS Technology secures a mechanical and indestructible bonding of the compound
// Full-range availability completed Q1 2021

// Compuesto de recambio original y mejorado para ATV y UTVs
// Compuesto EVO con sinterizado conductivo de vanguardia, formulado para lograr una mordida inicial enérgica con sensación inmediata de frenado, fácil modulación y altas prestaciones en las paradas
// Resistente al desgaste con rendimiento constante y fiable en condiciones de conducción extremas y durante toda la vida útil de la pastilla de freno
// Tecnología NRS que garantiza una adherencia mecánica e indestructible del compuesto
// Disponibilidad de la gama completa en el primer trimestre de 2021

Brake performance diagrams to be compared individually within OFF ROAD compounds only.

Diagramas de potencia de freno para comparar de forma individual los compuestos de OFF ROAD exclusivamente.





ATS - SINTER

FRONT / DELANTE • REAR / POSTERIOR

// OE replacement compound for combination with plain steel brake rotors
// Sintered compound compatible with OE standard plain steel brake rotors as used with older Arctic Cat & Polaris ATV models

// Compuesto de recambio original para combinar con discos de freno de acero normales
// Compuesto sinterizado compatible con modelos originales de discos de freno de acero normales, como los que se emplean en los modelos ATV Arctic Cat y Polaris ATV



CS - CARBON

FRONT / DELANTE • REAR / POSTERIOR

// Affordable replacement choice for hobby motocross and competition
// Carbon compound offers smooth, quiet and non-grabbing performance
// NUCAP NRS technology secures a mechanical and indestructible bonding of the compound

// Alternativa de recambio económica para competición y aficionados al motocross
// Compuesto de carbono con funcionamiento suave, silencioso y sin agarrotamiento
// Tecnología NUCAP NRS que garantiza una adherencia mecánica e indestructible del compuesto

BRAKE SHOES WITH SPRINGS

ZAPATAS DE FRENO CON MUELLES



Asbestos-free brake lining for superior performance and durability under all weather conditions. High grade alloy for superior strength. Surface treated against corrosion. Brake shoe springs made of high quality spring wire steel according to DIN 17223 specifications for max. flexibility.

Guarnición de freno sin amianto que ofrece un resultado y una durabilidad superiores en cualquier clima Aleación de aluminio de alta calidad con resistencia superior Superficie con tratamiento anticorrosión Muelles realizados con alambre de acero de alta calidad conforme con las especificaciones DIN 17223 para una flexibilidad máxima.

STAINLESS BRAKE PINS

TORNILLOS DE FRENO INOXIDABLES



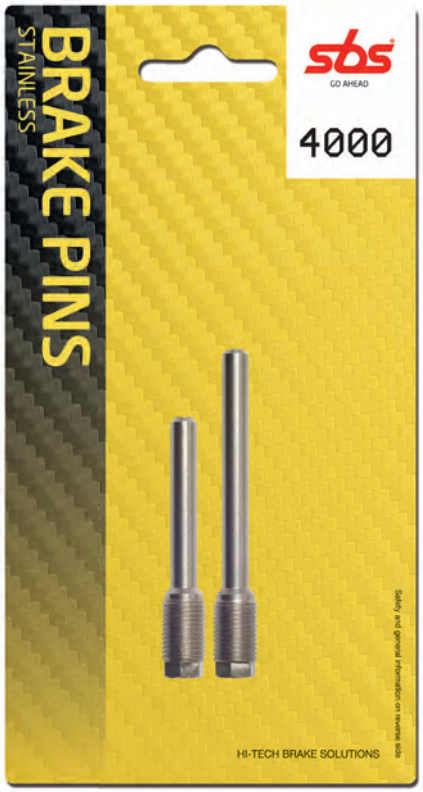

The SBS stainless brake pin range covers the most common MX and Enduro bikes from the early 1990s until today.

The range comprises 5 complete sets, front and rear together, but are also available as single packs with only front or rear to the respective model. Brake pad pins get wear grooves after a while so it is recommended to replace them regularly in order to prevent stiction and poor performance.

// Made of high quality stainless steel 304
// 8 mm hex head for quick and easy change of brake pad (excl. ref 4003)
// Corrosion resistant
// Smooth sliding between pin and brake pads

La serie de tornillos de freno inoxidables de SBS cubre las gamas de motocicletas MX y Enduro más comunes que aparecieron en la década de 1990 y que siguen existiendo en la actualidad.

La gama incluye 5 juegos completos de tornillos delanteros y traseros, pero también hay disponibles paquetes individuales (solo con tornillos delanteros o solo con traseros) específicos para cada modelo. Los tornillos de las zapatas de los frenos presentan grietas de desgaste después de un tiempo, por lo que se recomienda sustituirlos de forma periódica para evitar problemas de fricción estática y escaso rendimiento.

// Realizados en acero inoxidable 304 de alta calidad
// Cabeza hexagonal de 8 mm para un cambio rápido y fácil de la zapata del freno (excl. ref 4003)
// Anticorrosión
// Acoplamiento suave entre tornillos y zapatas de freno

ACCESSORIES



BRAKE SYSTEM BLEEDER

Motorcycle brake system bleeder which allows quick, safe and clean exchange of brake fluid. Access to min. 6 bar air pressure is necessary. The bleeder is made of the best and most durable brake fluid resistant materials which means that it handles the highly corrosive brake fluid in a closed circuit. A special safety and “tip-over” valve, prevents the fluid to leak out when the container is full.

// Built-in ”tip-over” valve
// Turnable line fitting
// Additional 2-nipple line included
// Manual in 12 languages

Part number 5809839100
EPDM rubber units
Art. number 5809939100 (10 pcs.)

PURGADOR DE FRENOS

Purgador del sistema de frenos de la motocicleta que permite cambiar el líquido de freno de forma rápida, limpia y segura. Se requiere una presión del aire mínima de 6 bar. El purgador de frenos está realizado con los materiales mejores y más resistentes al líquido de freno: el líquido, que es muy corrosivo, se mantiene en un circuito cerrado. Una válvula de seguridad especial y “antivuelco” impide la pulverización del líquido cuando el recipiente está lleno.

// Válvula “antivuelco” incorporada
// Llave giratoria
// Conducto adicional de doble boquilla incluido
// Manual en 12 idiomas

N.º de pieza 5809839100
Unidades de caucho EPDM
N.º art. 5809939100 (10 uds.)

ACCESORIOS



ANTI-NOISE SHIMS

// Vibration/noise resistant
// Temperature transfer resistant
// Piston protective
// Do not use for racing

Part number 9500

CUÑAS DE PASTILLAS DE FRENO

// Resistente a vibraciones/ruidos
// Resistente a la transferencia del calor
// Ideal para proteger el pistón
// Mejor sensación de frenado
// No utilizar en carreras

N.º de pieza 9500 (uds.)

MERCHANDISE ARTÍCULOS PROMOCIONALES



T-SHIRT VINTAGE

Art. no.	Size
6829827100	M
6839827100	L
6849827100	XL
6859827100	XXL



T-SHIRT GO AHEAD

Art. no.	Size
6829915100	M
6839915100	L
6849915100	XL
6859915100	XXL



T-SHIRT

Art. no.	Size
6829914100	M
6839914100	L
6849914100	XL
6859914100	XXL
6869914100	XXXL
6879914100	XXXXL



POLO-SHIRT

Art. no.	Size
6829969100	M
6839969100	L
6849969100	XL



HOODIE

Art. no.	Size
6819916100	S
6829916100	M
6839916100	L
6849916100	XL
6859916100	XXL
6869916100	XXXL



JACKET - DOWN&FEATHER

Art. no.	Size
6829841100	M
6839841100	L
6849841100	XL



CAP

Art. no.
6809808100



BEANIE – 10 pcs

Art. no.	Size
6839918100	L



SOCKS

Art. no.	Size
6819801100	39-42
6829801100	43-45

MERCHANDISE ARTÍCULOS PROMOCIONALES



FLUID CAP
– 10 pcs

Art. no.
6809800100



GLOVES

Art. no.	Size
6829812100	M
6839812100	L
6849812100	XL



EARPLUGS

Art. no.
6809815100



BRAKE PAD MINTS
– 20 pcs

Art. no.
6809806100



SWEETS – 5 kg.

Art. no.
6809842100

Sticker Racing Supertack

Art. no.
6809704100

Sticker

Art. no.
6809702100 – ø34 mm
6809701100 – ø80 mm

Sticker

Art. no.
6809700100 – ø240 mm

Sticker Racing Supertack

Art. no.
6809703100

MERCHANDISE ARTÍCULOS PROMOCIONALES



NON-WOWEN GO AHEAD BAG – 100 pcs

Art. no.
6809803100



SBS PAPER GIFT BAG

Art. no.
6809802100



UMBRELLA – ø130 cm

Art. no.
6809835100



PERSONAL NOTEBOOK

Art. no.
6809816100



PENS – 50 pcs

Art. no.
6809804100



POWERBANK – KEYHOLDER

Art. no.
6809807100



USB KEY

Art. no.
6809913100



BANNER

Art. no.
6809824100 – 3 logos – 4 x 0.8 m
6809825100 – 6 logos – 8 x 0.8 m



BUNTING 10 m

Art. no.
6809826100

SALES & POS MATERIAL

DISPLAYS

SBS offers practical and robust sales displays for POS promotion of SBS products. Choose between:

SBS ofrece expositores prácticos y resistentes para exhibir el material de promoción de los productos SBS en el punto de venta. Puede elegir entre:



DISPLAY FOR WALL OR DESK MOUNTING
Art. no. 6809899100

Wall mountings and instruction 6 screws with raw plugs 12 hooks, 20 ref. cards. Width 57.2 cm, hight 86.5 cm.



10 HOOKS FOR DISPLAY RACK
Art. no. 6809833100



10 REF. CARDS FOR DISPLAY RACK
Art. no. 6809834100



DISPLAY FOR WALL MOUNTING
Art. no. 6809832100

Complete with: Wall mountings and instruction 6 screws with raw plugs 36 hooks, 40 ref. cards. Width 40 cm, depth 30 cm, hight 229 cm.

PRINT MATERIALS



Booklet:
MOTORCYCLE AND SCOOTER BRAKE PADS
English: Art. no. 6809911101

Other languages on request.



Flyer:
DYNAMIC RACING CONCEPT
English: Art. no. 6809979101

Other languages on request.



Flyer:
BRAKE DISCS
English: Art. no. 6809830101

Other languages on request.



Flyer:
CLUTCH KITS
English: Art. no. 6809978101

Other languages on request.

CHAMPION POSTERS 2020



WORLD CHAMPION SUPERSPORT 300
50 x 70 cm

Art. no.
6809720100



BRITISH SUPERBIKE CHAMPION
50 x 70 cm

Art. no.
680982210

POSTER MATERIAL



THE PERFECT CHOICE FOR OFF-ROAD
50 X 70 CM

ART. NO.
6809711100



OFF-ROAD COMPOUND RSI
50 x 70 cm

Art. no.
6809713100



ATV/UTV COMPOUND PSI
50 x 70 cm

Art. no.
6809714100



DYNAMIC RACING CONCEPT
50 x 70 cm

Art. no.
6809712100



ANY MARKE, MODEL, YEAR
50 x 70 cm

Art. no.
6809715100

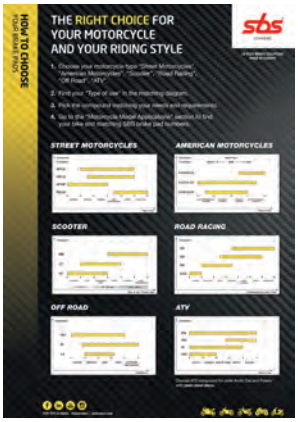

CHOOSE YOUR BRAKE PADS
70 x 100 cm

Art. no.
6809716100

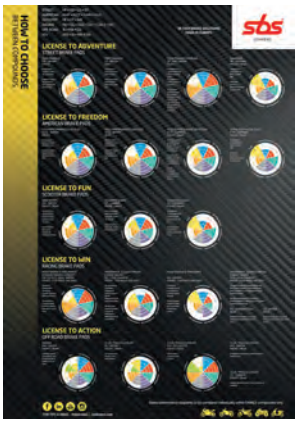

CHOOSE BETWEEN COMPOUNDS
70 x 100 cm

Art. no.
6809717100

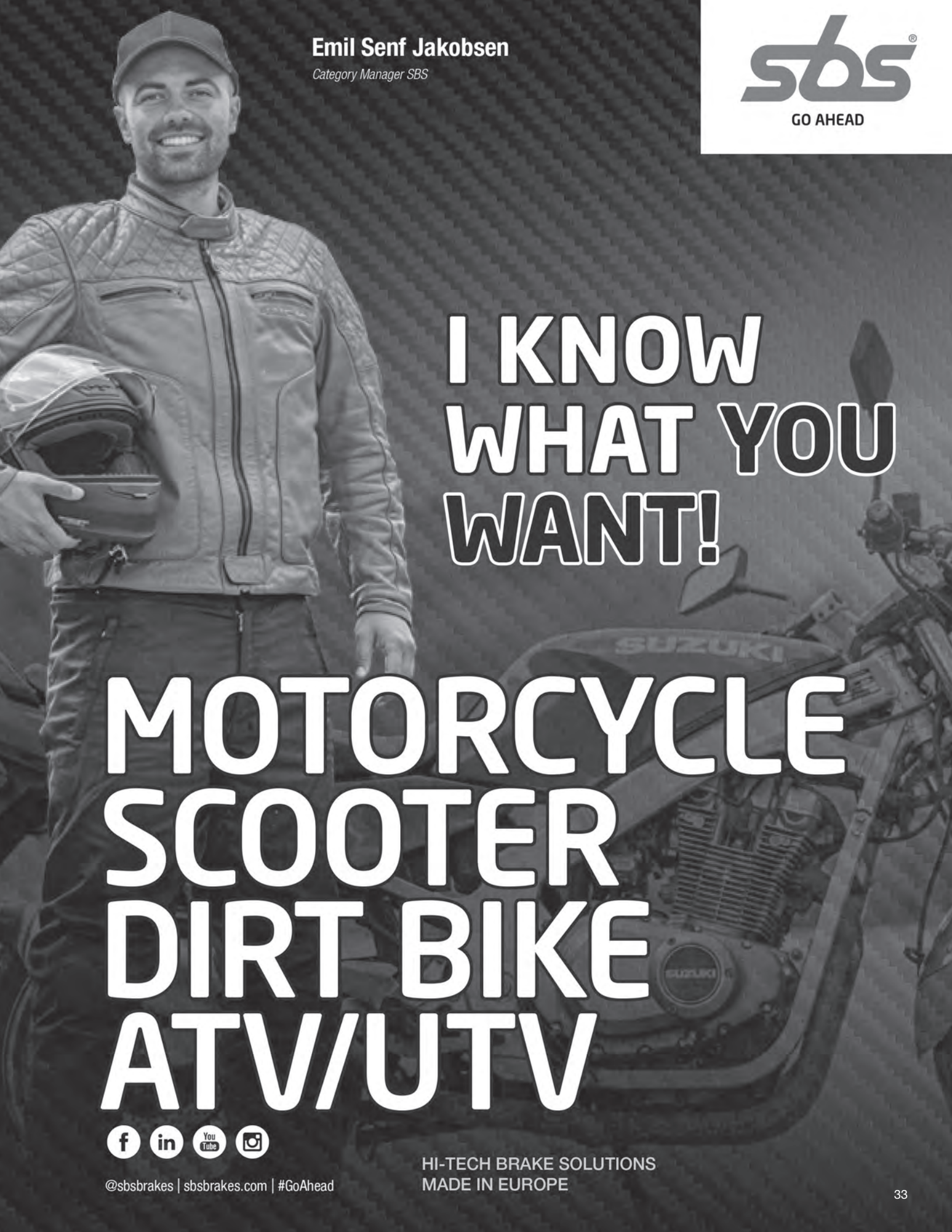
Emil Senf Jakobsen
Category Manager SBS
sbs
GO AHEAD
I KNOW WHAT YOU WANT!
MOTORCYCLE
SCOOTER
DIRT BIKE
ATV/UTV
@sbsbrakes | sbsbrakes.com | #GoAhead
HI-TECH BRAKE SOLUTIONS
MADE IN EUROPE

				RECOMMENDED	
				1xx - 2xx = Scooter Pads 5xx - 9xx = Street, Off Road & Racing Pads 2xxx = Brake Shoes	
ADLY					
	25	Silver Fox	00 - 05	111 HF	2028
	50	Cat	01 - 08	111 HF	
	50	Cosy	01 - 08	111 HF	
	50	Fox	00 - 09	111 HF	2028
	50	Fox Plus	01 - 09	111 HF	
	50	Jet	96 - 99	111 HF	2028
	50	Panther	01 - 09	102 HF	
	50	Pista, Pista Twin Light	96 - 99	111 HF	2028
	50	Silver Fox	00 - 05	111 HF	2028
	50	Silver Fox	06 - 09	102 HF	2028
	50	Super Sonic	00 - 05	102 HF*	
	50	Thunderbike	97 - 09	102 HF	
RS	50	Super Sonic	06 - 08	102 HF	102 HF
RT	50	Road Tracer	02 - 06	111 HF	
	70	Fox Plus	01 - 05	111 HF	
	70	Pista, Pista Twin Light	01 - 05	111 HF	
	80	Cosy	01 - 06	111 HF	
RT	90	Road Tracer	02 - 06	111 HF	
	100	Cat	01 - 08	111 HF	
	100	Jet	96 - 99	111 HF	2028
	100	Panther	01 - 06	102 HF	
	100	Silver Fox	01 - 05	111 HF	
	100	Silver Fox	06 - 06	102 HF	2028
	100	Super Sonic	01 - 05	102 HF*	
	100	Thunderbike	01 - 04	102 HF*	102 HF
RT	100	Road Tracer	02 - 06	111 HF	
	125	Cat	01 - 04	111 CT	
	125	Super Sonic	01 - 05	102 CT*	
	125	Thunderbike	01 - 04	102 CT*	102 CT
	150	ATV	05 - 07	544 SI*	544 SI
	150	Interceptor	05 - 07	544 SI*	544 SI
	300	ATV	05 - 11	544 SI*	544 SI
	300	Cross X Over	07 - 11	810 SI*	
	300	Cross X Road	07 - 11	810 SI*	
ATV	300	Sport	07 - 13	810 SI*	848 SI
	320	S	07 - 13	810 SI*	
	320	U	07 - 13	810 SI*	
APRILIA					
	50	Mini RX	04 - 04	803 RSI	
	50	Sport City One	08 - 12	177 HF	
RS-4	50		12 - 19	189 MS	101 HF
RS-4	50	Replica	16 - 17	189 MS	101 HF
SR	50	Ditech	01 - 06	123 HF	152 HF
SR	50	Racing	00 - 04	123 HF	152 HF
SR	50	Replica	94 - 96	117 HF	2012
SR	50	Replica (Liquid Cooled)	96 - 96	123 HF	2012
SR	50	Stealth, Racing	97 - 00	123 HF	123 HF
SR	50	Street	05 - 12	123 HF	152 HF
SR	50	WWW, Netscaper	97 - 99	149 HF	2012
SX	50	Ltd.	07 - 15	197 CT	101 CT
	125	Tuono ABS	17 - 19	821 HS	544 HF
RS	125	GP	17 - 19	821 HS	544 HF
RS-4	125	(AJP cal.)	11 - 19	821 HS	585 HF
RS-4	125	(J.Juan cal.)	11 - 19	566 HS	544 HF
RS-4	125	Replica, ABS	16 - 19	821 HS	544 HF
SR	125		99 - 03	153 CT	2205
SR	125	Max	12 - 17	177 CT	177 CT
SR	125	Sport City One	12 - 12	177 CT	
SX	125		08 - 13	671 HF	651 HF
SR	150		00 - 03	153 CT	2205
	200	Sportcity	04 - 08	108 CT	152 CT
RS	250	Pista	04 - 04	706 HF*	519 HF
SR	300	Max	12 - 19	177 MS	177 MS
MXV	450		09 - 13	694 RSI	790 RSI
RXV	450		06 - 13	694 SI	790 SI
SXV	450		06 - 13	842 RSI	790 RSI
SXV	450	Van den Bosch Rep.	08 - 10	695 RST	790 RSI

				RECOMMENDED	
				1xx - 2xx = Scooter Pads 5xx - 9xx = Street, Off Road & Racing Pads 2xxx = Brake Shoes	
APRILIA					
RXV	550		06 - 13	694 SI	790 SI
SXV	550		06 - 13	842 RSI	790 RSI
SXV	550	Van den Bosch Rep.	08 - 10	695 RST	790 RSI
	650	Pegaso	92 - 94	681 HF	651 HF
	650	Pegaso	95 - 00	674 HS	692 HF
	650	Pegaso Strada	05 - 09	706 HS	675 LS
RS	660		20 - 21	900 SP*	730 LS
	750	Dorsoduro Factory	12 - 13	706 HS*	675 LS
SL	750	Shiver GT, ABS	09 - 12	844 HS*	675 LS
SL	750	Shiver, ABS	07 - 18	844 HS*	675 LS
SMV	750	Dorsoduro	08 - 08	706 HS*	675 LS
SMV	750	Dorsoduro	09 - 18	844 HS*	675 LS
NA	850	Mana	07 - 07	844 HS*	675 LS
NA	850	Mana GT, ABS	09 - 13	844 HS*	588 HF
NA	850	Mana GT, ABS (Parking Brake)	09 - 13	879 HF	
NA	850	Mana, ABS	08 - 11	844 HS*	588 HF
	1000	Blue Marlin	02 - 02	706 HS*	730 LS
ETV	1000	Caponord	01 - 08	674 HS*	730 LS
ETV	1000	Caponord Rally Raid	04 - 08	674 HS*	730 LS
RST	1000	Futura	01 - 03	706 HS*	671 LS
RSV	1000	Factory Pista	04 - 04	762 HS*	730 LS
RSV	1000	Falco SL, R	00 - 04	706 HS*	730 LS
RSV	1000	Mille	97 - 01	706 HS*	730 LS
RSV	1000	Mille	02 - 03	762 HS*	730 LS
RSV	1000	Mille Nera	04 - 04	762 HS*	730 LS
RSV	1000	Mille R	00 - 00	706 HS*	730 LS
RSV	1000	Mille R	01 - 07	762 HS*	730 LS
RSV	1000	Mille R Factory	04 - 05	762 HS*	730 LS
RSV	1000	Mille SP	00 - 00	706 HS*	730 LS
RSV	1000	Tuono Fighter	03 - 05	706 HS*	730 LS
RSV	1000	Tuono R	03 - 03	762 HS*	730 LS
RSV	1000	Tuono R Factory, ABS	06 - 12	762 HS*	730 LS
RSV	1000	Tuono R, ABS	04 - 12	706 HS*	730 LS
RSV	1000	Tuono V4 R	11 - 13	706 HS*	730 LS
RSV	1000	Tuono V4 R	14 - 14	900 HS*	730 LS
RSV4	1000	, ABS	09 - 13	841 SP*	730 LS
RSV4-R	1000	, ABS APRC	10 - 10	841 SP*	730 LS
RSV4-RF	1000		15 - 20	901 SP*	730 LS
RSV4-RR	1000		15 - 20	901 SP*	730 LS
RSV	1100	Tuono V4	15 - 15	900 HS*	730 LS
RSV	1100	Tuono V4 Factory	15 - 16	900 HS*	730 LS
RSV	1100	Tuono V4 Factory	17 - 18	901 HS*	730 LS
RSV	1100	Tuono V4 RR	15 - 16	900 HS*	730 LS
RSV	1100	Tuono V4 RR	17 - 19	901 HS*	730 LS
RSV4	1100	Factory	19 - 20	841 SP*	730 LS
	1200	Caponord	13 - 19	900 SP*	675 LS
	1200	Caponord Rally	15 - 19	900 SP*	675 LS
	1200	Caponord Travel Pack	16 - 19	900 SP*	675 LS
	1200	Dorsoduro, ABS	11 - 14	706 HS*	675 LS
ARCTIC CAT					
	50	2WD	04 - 06	2048*	
	50	DVX	06 - 08	2048*	638 SI
	90	2WD	02 - 04	2048*	
	90	DVX	06 - 14	2048*	638 SI
	250	2x4	05 - 06	822 ATS*	822 ATS
	250	2x4 (Man. Hand Brake)	99 - 04		827 ATS
	250	2x4/4x4	99 - 04	758 ATS*	758 ATS
	250	4x4 (Man. Hand Brake)	00 - 04		827 ATS
	250	DVX	06 - 09	810 SI*	775 SI
	300	2x4	10 - 13	822 ATS*	822 ATS
	300	2x4 (Man. Hand Brake)	98 - 04		827 ATS
	300	2x4/4x4	98 - 04	758 ATS*	758 ATS
	300	4x4	05 - 05	822 ATS*	822 ATS
	300	4x4 (Man. Hand Brake)	98 - 05		827 ATS
	300	DVX	09 - 16	810 SI*	775 SI
	375	2x4/4x4	02 - 02	758 ATS*	758 ATS

* = 2 sets required / 2 jeux pour l'Avant.
Full compound selection, see under "Brake pad 1:1 Drawings" / Sélection complète de composés, voir "1:1 Schémas Plaquettes de frein".

				RECOMMENDED 1xx - 2xx = Scooter Pads 5xx - 9xx = Street, Off Road & Racing Pads 2xxx = Brake Shoes	
ARCTIC CAT					
	375	2x4/4x4			
		(Man. Hand Brake)	02 - 02		827 ATS
	400	2x4 (Man. Hand Brake)	98 - 02		827 ATS
	400	2x4/4x4	98 - 04	758 ATS*	758 ATS
	400	2x4/4x4 (FIS)	02 - 04	758 ATS*	758 ATS
	400	2x4/4x4 (FIS)	05 - 07	822 ATS*	822 ATS
	400	2x4/4x4 (FIS) Aut.			
		(Man. Hand Brake)	03 - 04		827 ATS
	400	2x4/4x4 (FIS			
		)(Man. Hand Brake)	02 - 04		827 ATS
	400	2x4/4x4 (FIS)			
		(Man. Hand Brake)	05 - 08		758 ATS
	400	4x4 (Man. Hand Brake)	98 - 04		827 ATS
	400	DVX	04 - 08	592 SI*	649 SI
	400	TBX 4x4	04 - 04	758 ATS*	758 ATS
	400	TBX 4x4			
		(Man. Hand Brake)	04 - 04		827 ATS
TRV	400		09 - 13	822 ATS*	822 ATS
	440	Bear Cat	96 - 97		758 ATS
	450	H1	10 - 10	822 ATS*	822 ATS
XC	450		11 - 14	822 ATS*	822 ATS
	454	Arctic Cat 4x4	98 - 98	758 ATS*	758 ATS
	454	Bear Cat 2x4/4x4	96 - 98	758 ATS*	758 ATS
	454	Bear Cat 2x4/4x4			
		(Man. Hand Brake)	98 - 98		827 ATS
	500	2x4 (FIS)			
		(Man. Hand Brake)	02 - 02		827 ATS
	500	2x4 (Man. Hand Brake)	02 - 02		827 ATS
	500	2x4/4x4	98 - 04	758 ATS*	758 ATS
	500	2x4/4x4 (FIS)	02 - 04	758 ATS*	758 ATS
	500	2x4/4x4 (FIS)	05 - 09	822 ATS*	822 ATS
	500	4x4 (FIS) Aut.			
		(Man. Hand Brake)	02 - 03		827 ATS
	500	4x4 (FIS)			
		(Man. Hand Brake)	02 - 03		827 ATS
	500	4x4 (Man. Hand Brake)	98 - 02		827 ATS
	500	TBX 4x4	02 - 04	758 ATS*	758 ATS
	500	TBX 4x4	05 - 06	822 ATS*	822 ATS
	500	TBX 4x4			
		(Man. Hand Brake)	03 - 04		827 ATS
	500	TBX 4x4 Aut.			
		(Man. Hand Brake)	02 - 02		827 ATS
	500	TRV 4x4	03 - 04	758 ATS*	758 ATS
	500	TRV 4x4	05 - 06	822 ATS*	822 ATS
	500	TRV 4x4			
		(Man. Hand Brake)	03 - 04		827 ATS
	550	H1	09 - 13	822 ATS*	822 ATS
	550	LTD	09 - 12	822 ATS*	822 ATS
	550	Prowler	09 - 14	822 ATS*	822 ATS
TRV	550		09 - 14	822 ATS*	822 ATS
	650	H1 4x4 Aut.	05 - 11	822 ATS*	822 ATS
	650	Prowler	06 - 08	822 ATS*	822 ATS
	650	V2 4x4 Aut.	05 - 06	822 ATS*	822 ATS
	650	V2 4x4 Aut. LE	05 - 06	822 ATS*	822 ATS
	700	Diesel	06 - 14	822 ATS*	822 ATS
	700	H1	09 - 10	822 ATS*	822 ATS
	700	Prowler	08 - 08	822 ATS*	822 ATS
	700	Wildcat Sport	15 - 18	946 ATS*	822 ATS
	700	Wildcat Sport LTD.	16 - 18	946 ATS*	822 ATS
	700	Wildcat Sport LTD. EPS	17 - 18	946 ATS*	822 ATS
	700	Wildcat Sport XT	15 - 18	946 ATS*	822 ATS
	700	Wildcat Sport XT EPS	16 - 18	946 ATS*	822 ATS
TBX	700		12 - 14	822 ATS*	822 ATS
TRV	700		09 - 12	822 ATS*	822 ATS
	1000	Prowler	09 - 09	822 ATS*	822 ATS
	1000	Thundercat	09 - 14	822 ATS*	822 ATS
	1000	Wildcat 4X	16 - 18	912 ATS*	822 ATS
	1000	Wildcat X	16 - 18	912 ATS*	822 ATS

				RECOMMENDED 1xx - 2xx = Scooter Pads 5xx - 9xx = Street, Off Road & Racing Pads 2xxx = Brake Shoes	
ARCTIC CAT					
	1000	Wildcat X Ltd.	17 - 18	912 ATS*	822 ATS
	1000	Wildcat X SE	17 - 18	912 ATS*	822 ATS
TRV	1000		09 - 14	822 ATS*	822 ATS
ARMSTRONG					
MX	500		86 - 86	519 SI	
MX	600		86 - 86	519 SI	
BENELLI					
TNT	125		17 - 17	558 HF	
TNT	125		18 - 19		915 HF
TNT	135		18 - 19		915 HF
BN	302	R	17 - 19	933 HS*	832 LS
BN	302	S	18 - 19	933 HS*	832 LS
	350	Zenzero	12 - 15	163 CT	101 CT
BX	449	Cross	07 - 09	671 RSI	675 RSI
	500	C	19 - 19	762 HS*	730 LS
	500	Leoncino	16 - 17	706 HS*	730 LS
TRK	502		16 - 17	706 HS*	730 LS
TRK	502		18 - 19	762 HS*	832 LS
TRK	502	X	19 - 19	674 HS*	832 LS
BX	505	Enduro	08 - 08	671 SI	675 SI
BN	600		12 - 13	706 HS*	730 LS
BN	600		14 - 17	762 HS*	730 LS
BN	600	GT	14 - 15	762 HS*	730 LS
T	600	Tornado Naked	20 - 20	762 HS*	730 LS
	654	Sport	83 - 83	519 HF*	519 HF
	750	Sei	75 - 78	506 HF*	
	752	S	20 - 20	900 HS*	730 LS
	756	Cue	07 - 09	762 HS*	730 LS
	756	Cue	10 - 12	706 HS*	730 LS
	800	Leoncino	20 - 20	900 HS*	730 LS
	899	Trek	07 - 12	706 HS*	730 LS
TnT	899		07 - 15	706 HS*	730 LS
TnT	899	Century Racer	11 - 11	762 HS*	730 LS
	900	Sei	81 - 83	554 HF*	
	900	Sei	84 - 84	506 HF*	506 HF
	900	Tornado 3	00 - 06	706 HS*	519 LS
	900	Tornado TRE	03 - 06	762 HS*	730 LS
	900	Tornado TRE RS	04 - 06	762 HS*	730 LS
TnT	1100		04 - 04	706 HS*	519 LS
TnT	1130		05 - 14	706 HS*	730 LS
TnT	1130	Cafe Racer	05 - 13	762 HS*	730 LS
TnT	1130	Century Racer	11 - 12	762 HS*	730 LS
TnT	1130	Officine	07 - 07	762 HS*	730 LS
TnT	1130	R	17 - 17	841 HS*	730 LS
TnT	1130	Sport	05 - 08	762 HS*	730 LS
TnT	1130	Titanium	05 - 08	762 HS*	730 LS
TnT	1130	Trek	06 - 12	706 SP*	730 LS
TnT	1130	Trek Amazonas	07 - 15	706 SP*	730 LS
BETA					
	50	AJP Caliper			
		incl. pin/spring	90 - 19	188 HF	
	50	ProRace 12/10	04 - 04	803 RSI	803 RSI
	50	Rev	00 - 09	559 HF	559 HF
ST	50		97 - 97	559 HF	559 HF
	80	EVO	09 - 10	802 RSI	
	80	EVO Junior	10 - 11	559 HF	559 HF
	80	Rev	00 - 07	559 HF	559 HF
	80	Rev	08 - 10	802 RSI	896 RSI
	125	EVO	09 - 14	802 RSI	895 RSI
	125	Rev 3	00 - 05	802 RSI	802 RSI
	125	Rev 3	06 - 08	802 RSI	896 RSI
ALP	125		90 - 90	595 HF	607 HF
ALP	125		99 - 09	559 RSI	559 RSI
ALP	125	4-stroke	00 - 05	559 RSI	559 RSI
ALP	125	4-stroke	06 - 09	774 HF	861 HF

* = 2 sets required / 2 jeux pour l'Avant.
Full compound selection, see under "Brake pad 1:1 Drawings" / Sélection complète de composés, voir "1:1 Schémas Plaquettes de frein".

				RECOMMENDED 1xx - 2xx = Scooter Pads 5xx - 9xx = Street, Off Road & Racing Pads 2xxx = Brake Shoes	
BETA					
RR	125		18 - 19	694 SI	790 SI
SR	125	34	89 - 89	559 HF	636 HF
TR	125	32,33	86 - 87	595 HF	
TR	125	34	88 - 88	595 HF	607 HF
TR	125	34	92 - 92	672 HF	636 HF
TR	125	34,35	89 - 90	559 RSI	559 RSI
TR	125	36	92 - 92	672 HF	636 HF
TRIAL	125		97 - 97	559 RSI	636 HF
R	150		10 - 13	814 HF	
	200	EVO	09 - 14	802 RSI	895 RSI
	200	Rev 3	06 - 08	802 RSI	896 RSI
ALP	200	4-stroke	00 - 05	559 RSI	559 RSI
ALP	200	4-stroke	06 - 20	774 HF	861 HF
	240	Super Trial	92 - 92	559 RSI	636 HF
ALP	240		92 - 92	559 RSI	636 HF
ALP	240		96 - 96	559 RSI	519 RSI
TR	240	33	86 - 88	595 HF	
	250	4-T Rev 3	07 - 11	802 RSI	896 RSI
	250	EVO (2-T / 4-T)	09 - 14	802 RSI	895 RSI
	250	Rev 3	00 - 04	802 RSI	802 RSI
	250	Rev 3	05 - 09	802 RSI	896 RSI
	250	Techno	96 - 96	559 RSI	559 RSI
	250	Zero	91 - 91	559 RSI	636 HF
ALP	250		92 - 92	559 RSI	636 HF
ALP	250		97 - 03	559 RSI	559 RSI
RR	250		05 - 09	694 SI	790 SI
	260	Synt	92 - 92	595 HF	636 HF
	260	Zero	91 - 91	559 RSI	636 HF
ALP	260		96 - 96	559 RSI	519 RSI
TR	260	34	86 - 88	595 HF	607 HF
TR	260	34,35,ZERO	89 - 92	559 RSI	636 HF
	270	Rev 3	00 - 04	802 RSI	802 RSI
	270	Rev 3	05 - 08	802 RSI	896 RSI
	290	EVO	09 - 13	802 RSI	895 RSI
	300	Crosstrainer	15 - 15	694 SI	790 SI
	300	EVO	09 - 15	802 RSI	895 RSI
RR	300		13 - 19	694 SI	790 SI
	350	4.0 Motard	04 - 06	566 RSI	574 RSI
ALP	350	4.0	04 - 05	774 HF	574 RSI
ALP	350	4.0	06 - 18	774 HF	861 HF
RR	350	Efi	15 - 15	694 SI	790 SI
RR	350	Efi Racing	15 - 15	694 SI	790 SI
RR	350	Enduro	12 - 14	694 SI	790 SI
RR	390		15 - 19	694 SI	790 SI
RR	400	Enduro	05 - 05	694 SI	790 SI
RR	430		15 - 19	694 SI	790 SI
RR	430	Racing	15 - 19	694 SI	790 SI
RR	450	Cross Country	12 - 12	694 SI	790 SI
RR	450	Enduro	05 - 07	694 SI	790 SI
RR	480		15 - 19	694 SI	790 SI
RR	480	Racing	15 - 19	694 SI	790 SI
RR	498	Enduro	12 - 14	694 SI	790 SI
	500	GS, RV	84 - 84	519 HF	
RR	525	Enduro	05 - 13	694 SI	790 SI
BIMOTA					
		all models	82 - 88	506 HF*	506 HF
BBX	300	Enduro	12 - 12	694 SI	790 SI
YB7	400		89 - 89	566 HF*	519 HF
	500	Vdue	97 - 00	566 HF*	519 HF
BBX	508	Enduro	12 - 12	694 SI	604 SI
	600	Bellaria	91 - 91	566 HF*	519 HF
YB9	600	SRI	97 - 97	566 HF*	519 HF
BB1	650	Supermono	97 - 00	566 HF*	519 HF
SB7	750		96 - 88	566 HF*	519 HF
YB4	750		89 - 89	566 HF*	519 HF
3D	800	Tesi	16 - 16	841 HS*	730 LS
1D	851	Tesi	91 - 91	566 HF*	519 HF

				RECOMMENDED 1xx - 2xx = Scooter Pads 5xx - 9xx = Street, Off Road & Racing Pads 2xxx = Brake Shoes	
BIMOTA					
1D	900	Tesi	93 - 93	566 HF*	519 HF
DB2	900		92 - 00	566 HF*	519 HF
DB3	900	Mantra	97 - 00	566 HF*	519 HF
DB4	900		99 - 00	706 HS*	519 LS
1D	906	Tesi	91 - 91	566 HF*	519 HF
	1000	Furano	92 - 93	566 HF*	519 HF
2D	1000	Tesi	04 - 06	566 HS*	519 LS
BB3	1000		14 - 18	901 SP*	730 LS
DB5	1000	Mille	05 - 11	762 SP*	730 LS
DB5	1000	S	07 - 11	762 SP*	730 LS
DB6	1000	Delirio	07 - 09	762 HS*	730 LS
SB3	1000	D	83 - 83	506 HF*	506 HF
SB8	1000	R	98 - 00	706 HS*	519 LS
SB8K	1000		06 - 06	706 HS*	519 LS
SB8K	1000	Santamonica	07 - 09	762 HS*	519 LS
YB11	1000		97 - 00	566 HF*	519 HF
YB6	1000		89 - 89	566 HF*	519 HF
YB8	1000		90 - 90	566 HF*	519 HF
	1002	Dieci	91 - 91	566 HF*	519 HF
DB10	1078	Bimotard	12 - 12	762 HS*	730 LS
DB5	1078	RE	12 - 12	762 HS*	730 LS
DB7	1098		08 - 08	762 HS*	730 LS
DB7	1099		09 - 09	901 HS*	519 LS
3D	1100	Tesi	07 - 11	762 SP*	730 LS
DB6R	1100	Delirio	08 - 09	762 HS*	730 LS
DBX	1100		13 - 18	674 HS*	671 LS
SB6	1100		97 - 00	566 HF*	519 HF
DB8	1198		10 - 14	901 SP*	730 LS
	1200	Impeto	16 - 17	841 HS*	730 LS
DB11	1200	VLX	13 - 13	901 HS*	730 LS
DB12	1200		12 - 12	762 HS*	730 LS
DB9	1200	Brivido	12 - 18	762 HS*	730 LS
BMW					
	125	C1	00 - 03	176 CT	175 CT
	200	C1	02 - 04	176 CT	175 CT
G	310	GS	17 - 21	877 HS	675 LS
G	310	R	16 - 21	877 HS	675 LS
C	400	GT	19 - 19	231 MS*	175 MS
C	400	X	18 - 21	231 MS*	175 MS
G	450	SMR	09 - 10	762 RST	791 RSI
G	450	X	08 - 10	671 SI	791 SI
R45	450		78 - 80	527 HF*	2139
R45	450		80 - 85	527 HF*	2140
C	600	Sport	12 - 15	183 MS*	183 MS
C	600	Sport (Parking Brake)	12 - 15	209 HF	
R60	600	Series	74 - 80		2139
R60/7	600		76 - 77	520 HF	2139
C	650	GT	12 - 21	183 MS*	183 MS
C	650	GT (Parking Brake)	12 - 15	209 HF	
C	650	Sport	16 - 20	183 MS*	183 MS
F	650	, ST	94 - 00	674 HF	675 HF
F	650	CS Scarver	02 - 06	674 HS	675 LS
F	650	GS	08 - 12	674 HS	675 LS
F	650	GS ABS	01 - 07	674 HF	675 HF
F	650	GS ABS	08 - 12	674 HS	675 LS
F	650	GS Dakar	01 - 07	674 HF	675 HF
F	650	GS, Rallye	01 - 07	674 HF	675 HF
F	650	ST Strada	97 - 01	674 HF	675 HF
G	650	GS	09 - 15	674 HS	675 LS
G	650	GS Sertao	12 - 14	674 HS	675 LS
G	650	Xchallenge	06 - 07	674 HS	675 LS
G	650	Xcountry	06 - 09	674 HS	675 LS
G	650	Xmoto	06 - 07	706 HS	675 LS
R65	650		78 - 79	527 HF	2139
R65	650		80 - 80		2140
R65	650	GS	87 - 92	506 HF	2140
R65	650	GS	91 - 92	506 HS	

* = 2 sets required / 2 jeux pour l'Avant.
Full compound selection, see under "Brake pad 1:1 Drawings" / Sélection complète de composés, voir "1:1 Schémas Plaquettes de frein".

RECOMMENDED
1xx - 2xx = Scooter Pads
5xx - 9xx = Street, Off Road & Racing Pads
2xxx = Brake Shoes

BMW					
R65	650	LS	82 - 85	506 HF*	2141
R65/1	650		86 - 86	554 HF*	506 HF
F	700	GS	13 - 16	674 HS*	675 LS
R70	700	Series	74 - 80		2139
F	750	GS	18 - 21	674 HS*	675 LS
K75	750		90 - 90	640 HS	506 LS
K75	750	C	85 - 88	506 HF*	2140
K75	750	RT	91 - 96	640 HS*	506 LS
K75	750	S, C	85 - 95	506 HF*	506 HF
R75	750		86 - 86		2140
R75/6	750		74 - 76	520 HF	2139
R75/7	750		76 - 77	520 HF	2139
	800	Touring	87 - 87		2140
F	800	GS	08 - 20	674 HS*	675 LS
F	800	GT	13 - 20	706 HS*	675 LS
F	800	R	09 - 14	706 HS*	675 LS
F	800	R	15 - 18	900 HS*	675 LS
F	800	S	06 - 10	706 HS*	675 LS
F	800	ST	06 - 12	706 HS*	675 LS
F	800	ST Touring	11 - 12	706 HS*	675 LS
R80	800		77 - 85	506 HF	2140
R80	800		81 - 81		2139
R80	800		86 - 88	554 HF	2140
R80	800	G/S P.-D.	86 - 86	506 HF	2140
R80	800	GS	81 - 87	506 HF	2140
R80	800	GS	91 - 92	506 HS	2140
R80	800	GS Mystic	91 - 95	554 HS*	2140
R80	800	GS Paris Dakar	88 - 94	554 HS	
R80	800	R	91 - 95	644 HS*	506 LS
R80	800	R	93 - 94	640 HS	2143
R80	800	RT	83 - 83	506 HF*	2140
R80	800	RT	84 - 85	554 HF*	2140
R80/7	800		77 - 78	520 HF	2139
R80/7	800		79 - 81	520 HF	506 HF
F	850	GS	18 - 21	674 HS*	675 LS
R	850	C	99 - 01	703 HS*	742 LS
R	850	GS	99 - 07	703 HS*	742 LS
R	850	R	96 - 02	703 HS*	742 LS
R	850	R	03 - 07	778 HS*	742 LS
R	850	RT	96 - 01	703 HS*	675 LS
R	850	RT With Integral ABS	01 - 06	796 HS*	742 LS
F	900	R	20 - 21	900 SP*	675 LS
F	900	XR	20 - 21	900 SP*	675 LS
R	900	RT	05 - 13	796 HS*	742 LS
R90	900	S	73 - 76	520 HF*	2139
R90	900	Series	74 - 80		2139
R90/6	900		73 - 76	520 HF	2139
	1000	HP4 Race	17 - 18	845 DS-1*	942 LS
K1	1000		89 - 89	644 HS*	506 LS
K100	1000	LT	87 - 87	506 HF*	506 HF
K100	1000	LT	92 - 94	644 HS*	506 LS
K100	1000	LT ABS	89 - 89	640 HS*	506 LS
K100	1000	RS	90 - 92	644 HS*	506 LS
K100	1000	RS ABS	88 - 89	640 HS*	506 LS
K100	1000	RS, RT	83 - 89	506 HF*	506 HF
M	1000	RR	21 - 21	985 SP*	984 LS
R100	1000		79 - 81		2139
R100	1000		81 - 84	506 HF*	506 HF
R100	1000	all models	81 - 84		2140
R100	1000	CS,RS, RT	81 - 84	506 HF*	506 HF
R100	1000	GS	87 - 94	554 HF	2140
R100	1000	GS Mystic	91 - 94	554 HS*	2140
R100	1000	R	91 - 95	644 HS*	506 LS
R100	1000	R	92 - 95	644 HS*	2143
R100	1000	RS	76 - 80	520 HF*	506 HF
R100	1000	RS	93 - 95	640 HS*	506 LS
R100	1000	RT	91 - 95	554 HS*	2143
R100	1000	S	76 - 77	520 HF*	2139

RECOMMENDED
1xx - 2xx = Scooter Pads
5xx - 9xx = Street, Off Road & Racing Pads
2xxx = Brake Shoes

BMW					
R100	1000	S	78 - 80	520 HF*	506 HF
R100	1000	T	79 - 84	520 HF*	506 HF
R100/7	1000		78 - 80	520 HF	2139
S	1000	R	13 - 19	870 HS*	675 LS
S	1000	RR	09 - 18	870 SP*	675 LS
S	1000	RR	19 - 21	960 SP*	675 LS
S	1000	RR HP4	12 - 14	901 SP*	675 LS
S	1000	XR	15 - 19	900 SP*	742 LS
S	1000	XR	20 - 21	960 SP*	742 LS
K1100	1100	LT/SE	92 - 00	644 HS*	506 LS
K1100	1100	RS	93 - 96	644 HS*	506 LS
R	1100	GS	99 - 99	703 HS*	742 LS
R	1100	R Cast wheels	99 - 01	703 HS*	742 LS
R	1100	R Spoke wheels	99 - 06	703 HS*	742 LS
R	1100	RT Cast wheels	95 - 01	703 HS*	742 LS
R	1100	RT Spoke wheels	95 - 01	703 HS*	742 LS
R	1100	S	99 - 00	703 HS*	742 LS
R	1100	S With Integral ABS	01 - 05	778 HS*	742 LS
R	1100	S Without Integral ABS	01 - 05	796 HS*	742 LS
R1100	1100	GS	94 - 01	703 HS*	742 LS
R1100	1100	RS	93 - 93	644 HS*	506 LS
R1100	1100	RS	94 - 01	703 HS*	506 LS
R	1150	GS	00 - 01	703 HS*	742 LS
R	1150	GS (Brembo cal.)	02 - 05	778 HS*	742 LS
R	1150	GS Adventurer			
		(Tokico cal.)	02 - 05	796 HS*	742 LS
R	1150	R	01 - 06	778 HS*	742 LS
R	1150	R Rockster	03 - 05	778 HS*	742 LS
R	1150	RS	01 - 04	778 HS*	742 LS
R	1150	RT With Integral ABS	01 - 06	796 HS*	742 LS
	1200	HP2 Enduro	04 - 06	674 HS*	671 LS
	1200	HP2 Megamoto	06 - 08	796 HS*	742 LS
	1200	HP2 Sport	08 - 10	901 SP*	671 LS
K	1200	GT (K41)			
		With Integral ABS	02 - 05	796 HS*	506 LS
K	1200	GT (K44)			
		With Integral ABS	04 - 08	796 HS*	671 LS
K	1200	LT	99 - 00	703 HS*	746 HF
K	1200	LT With Integral ABS	01 - 08	778 HS*	746 HF
K	1200	R	05 - 08	778 HS*	742 LS
K	1200	R Sport	05 - 07	778 HS*	742 LS
K	1200	RS	97 - 00	703 HS*	506 LS
K	1200	RS	01 - 05	796 HS*	506 LS
K	1200	S	05 - 08	796 HS*	742 LS
R	1200	C	98 - 02	703 HS*	742 LS
R	1200	C Classic	03 - 04	778 HS*	742 LS
R	1200	C Independent	03 - 04	778 HS*	742 LS
R	1200	C Montauk	02 - 04	778 HS*	742 LS
R	1200	CL	03 - 04	778 HS*	746 HF
R	1200	GS	04 - 12	796 SP*	742 LS
R	1200	GS	13 - 18	900 SP*	674 LS
R	1200	GS Adventure	08 - 13	796 HS*	742 LS
R	1200	GS Adventure	14 - 16	900 SP*	674 LS
R	1200	GS Tripple Black	11 - 16	796 SP*	742 LS
R	1200	Nine-T	14 - 21	900 HS*	671 LS
R	1200	Nine-T Pure	17 - 21	706 HS*	671 LS
R	1200	Nine-T Racer	17 - 20	706 HS*	671 LS
R	1200	Nine-T Scrambler	16 - 21	706 HS*	671 LS
R	1200	Nine-T Urban GS	17 - 21	706 SP*	671 LS
R	1200	R	07 - 14	778 HS*	742 LS
R	1200	R	15 - 18	900 HS*	674 LS
R	1200	RS	14 - 18	900 HS*	674 LS
R	1200	RT	06 - 13	796 HS*	742 LS
R	1200	RT	14 - 18	900 HS*	674 LS
R	1200	S	06 - 07	796 HS*	742 LS
R	1200	ST	06 - 07	796 HS*	742 LS
R	1250	GS	19 - 21	960 SP*	674 LS
R	1250	GS Adventure	19 - 21	960 SP*	674 LS

* = 2 sets required / 2 jeux pour l'Avant.
Full compound selection, see under "Brake pad 1:1 Drawings" / Sélection complète de composés, voir "1:1 Schémas Plaquettes de frein".

				RECOMMENDED 1xx - 2xx = Scooter Pads 5xx - 9xx = Street, Off Road & Racing Pads 2xxx = Brake Shoes	
BMW					
R	1250	R	19 - 21	900 HS*	674 LS
R	1250	RS	19 - 21	900 HS*	674 LS
R	1250	RT	19 - 21	960 SP*	674 LS
R	1250	RT Sport	19 - 20	960 SP*	674 LS
K	1300	GT	09 - 10	796 HS*	671 LS
K	1300	R	09 - 15	778 SP*	742 LS
K	1300	R Dynamic	11 - 15	778 SP*	742 LS
K	1300	S	09 - 15	796 HS*	742 LS
K	1600	B	17 - 21	778 HS*	674 LS
K	1600	Grand America	18 - 20	778 HS*	674 LS
K	1600	GT	11 - 21	778 HS*	674 LS
K	1600	GTL	11 - 21	778 HS*	674 LS
BOMBARDIER					
	50	Quest	03 - 04	2048*	2041
DS	50		02 - 06	2048*	2041
	90	Quest	03 - 04	2048*	2041
DS	90		02 - 06	2048*	2041
	200	Rally 2x4	03 - 04	544 SI*	
DS	250	Left	06 - 06	754 SI	754 SI
DS	250	Right	06 - 06	767 SI	
	330	Outlander Left	03 - 06	754 SI	754 SI
	330	Outlander Right	03 - 06	767 SI	
	400	Outlander Left	03 - 06	754 SI	754 SI
	400	Outlander Right	03 - 06	767 SI	
	400	Outlander Max Left	03 - 06	754 SI	754 SI
	400	Outlander Max Right	03 - 06	767 SI	
	500	Quest Left	02 - 06	754 SI	754 SI
	500	Quest Right	02 - 06	767 SI	
	500	Traxter 4x4	99 - 00	730 HF*	730 HF
	500	Traxter 4x4 Left	01 - 06	754 SI	767 SI
	500	Traxter 4x4 Right	01 - 06	767 SI	
	500	Traxter Max Left	03 - 05	754 SI	767 SI
	500	Traxter Max Right	03 - 05	767 SI	
	650	Quest Left	02 - 06	754 SI	754 SI
	650	Quest Right	02 - 06	767 SI	
	650	Quest Max Left	03 - 06	754 SI	767 SI
	650	Quest Max Right	03 - 06	767 SI	
	650	Traxter Max Left	03 - 05	754 SI	767 SI
	650	Traxter Max Right	03 - 05	767 SI	
DS	650	Left	01 - 06	754 SI	754 SI
DS	650	Right	01 - 06	767 SI	
	800	Outlander Left	06 - 06	754 SI	754 SI
	800	Outlander Right	06 - 06	767 SI	
	800	Outlander XT Left	06 - 06	754 SI	754 SI
	800	Outlander XT Right	06 - 06	767 SI	
BRAMMO					
		Empulse	14 - 16	706 H.HS*	730 LS
BUELL					
		all models	94 - 97	658 HF	692 HF
	500	Blast	01 - 09	627 HF	614 HF
XB9R	984	Firebolt	02 - 10	795 HS	614 LS
XB9S	984	Lightning	03 - 10	795 HS	614 LS
XB9SX	984	CityX	05 - 10	795 HS	614 LS
	1125	CR	09 - 10	856 HS	857 LS
	1125	R	08 - 10	856 HS	857 LS
M2	1200	Cyclone	98 - 02	676 HS	614 LS
RS	1200		12 - 12	658 HF	692 HF
S1	1200	Lightning	98 - 02	676 HS	614 LS
S1	1200	Whitelightning	98 - 02	676 HS	614 LS
S3	1200	Thunderbolt	98 - 02	676 HS	614 LS
X1	1200	Lightning	01 - 02	676 HS	614 LS
XB12R	1200	Firebolt	04 - 08	795 HS	614 LS
XB12R	1200	Firebolt	09 - 10	856 HS	614 LS
XB12S	1200	Lightning	04 - 08	795 HS	614 LS
XB12Scg	1200	Lightning	06 - 08	795 HS	614 LS

				RECOMMENDED 1xx - 2xx = Scooter Pads 5xx - 9xx = Street, Off Road & Racing Pads 2xxx = Brake Shoes	
BUELL					
XB12Scg	1200	Lightning	09 - 10	856 HS	614 LS
XB12Ss	1200	Lightning Long	06 - 08	795 HS	614 LS
XB12Ss	1200	Lightning Long	09 - 10	856 HS	614 LS
XB12STT	1200	Super TT	07 - 10	795 HS	614 LS
XB12X	1200	Ulysses	06 - 10	795 HS	614 LS
CAGIVA					
	50	AJP Caliper			
		incl. pin/spring	90 - 19	188 HF	
	125	Blues	87 - 85	588 HF	519 HF
	125	Blues	93 - 93	519 HF	519 HF
	125	Cross	86 - 86	608 SI	692 SI
	125	Cruiser	88 - 89	594 HF	519 HF
	125	Cruiser	89 - 89	608 HF	574 HF
	125	E2	86 - 86	574 HF	
	125	Elefant	81 - 88	574 HF	
	125	Enduro	86 - 86	519 HF	
	125	Raptor	03 - 10	566 HF	519 HF
	125	SST	81 - 81	574 HF	
	125	Stella	97 - 08	103 CT	
	125	Tamanaco	87 - 92	608 HF	574 HF
	125	Tamanaco	89 - 89	608 HF	519 HF
WMX	125		88 - 88	608 SI	
WMX	125		89 - 90	692 SI	692 SI
WMX	125	GP-Replica	86 - 89	519 SI	
WRX	125		85 - 85	519 HF	
	200	Aletta Electra	83 - 83	574 HF	
	200	Cross	83 - 86	574 HF	
	200	Elefant	86 - 86	519 HF	
	250	Cross	86 - 86	608 SI	
MXR	250		82 - 82	519 HF	
WMX	250		89 - 90	608 SI	692 SI
WMX	250	GP	82 - 82	519 SI	
	350	Alazurra	85 - 87	519 HF*	519 HF
	350	Elefant	86 - 89	594 HF	519 HF
T4	350	R	87 - 99	519 HF	2026
	500	Mito	07 - 07	566 HS	519 LS
T4	500	E	87 - 90	519 HF	2026
WMX	500		85 - 86	519 SI	
WMX	500	Cross	87 - 87	519 SI	519 SI
SP	525	Mito	08 - 10	566 HS	519 LS
	650	Alazurra	84 - 84	519 HF	519 HF
	650	Alazurra	85 - 88	560 HF*	560 HF
	650	Elefant	86 - 87	594 HF	519 HF
	650	Raptor	01 - 08	706 HS*	730 LS
	650	V-Raptor	01 - 08	706 HS*	730 LS
	900	Canyon I.E.	97 - 97	647 HS	638 LS
	900	Elefant	93 - 97	671 HF*	671 HF
	900	Gran Canyon	99 - 04	627 HS*	638 LS
	1000	Navigator, T	00 - 05	627 HS*	638 LS
	1000	Raptor	00 - 08	706 HS*	730 LS
	1000	V-Raptor	00 - 08	706 HS*	730 LS
	1000	X3 Raptor	04 - 04	762 HS*	730 LS
	1000	X-Raptor	03 - 04	762 HS*	730 LS
	1000	Xtra Raptor	02 - 06	706 HS*	730 LS
CAN-AM					
DS	50		07 - 11	2048*	2041
DS	70		08 - 14	2048*	2041
DS	90		07 - 18	2048*	2041
DS	90	X	08 - 18	544 SI*	544 SI
	200	ASE	86 - 86	519 SI	
	250	ASE	86 - 86	519 SI	
	250	MX LC	86 - 86	519 SI	
DS	250		08 - 18	810 SI*	810 SI
	350	ASE	86 - 86	519 SI	
	400	Outlander EFi Left	09 - 14	754 SI	754 SI
	400	Outlander EFi Right	09 - 14	767 SI	

* = 2 sets required / 2 jeux pour l'Avant.
Full compound selection, see under "Brake pad 1:1 Drawings" / Sélection complète de composés, voir "1:1 Schémas Plaquettes de frein".



RECOMMENDED
1xx - 2xx = Scooter Pads
5xx - 9xx = Street, Off Road & Racing Pads
2xxx = Brake Shoes




CAN-AM					
	400	Outlander MAX STD Left	07 - 13	754 SI	754 SI
	400	Outlander MAX STD Right	07 - 13	767 SI	
	400	Outlander MAX XT Left	07 - 13	754 SI	754 SI
	400	Outlander MAX XT Right	07 - 13	767 SI	
	400	Outlander STD Left	07 - 14	754 SI	754 SI
	400	Outlander STD Right	07 - 14	767 SI	
	400	Outlander XT Left	07 - 14	754 SI	754 SI
	400	Outlander XT Right	07 - 14	767 SI	
	406	ASE	87 - 87	519 SI	
	450	Outlander Left	15 - 18	911 SI	
	450	Outlander Right	15 - 18	910 SI	910 SI
	450	Outlander MAX Left	15 - 18	911 SI	
	450	Outlander MAX Right	15 - 18	910 SI	910 SI
DS	450		08 - 12	907 SI*	908 SI
	500	ASE	86 - 86	519 SI	
	500	MX	86 - 86	519 SI	
	500	Outlander Left	13 - 14	911 SI	
	500	Outlander Right	13 - 14	910 SI	910 SI
	500	Outlander MAX Left	13 - 14	911 SI	
	500	Outlander MAX Right	13 - 14	910 SI	910 SI
	500	Outlander MAX STD Left	07 - 12	754 SI	754 SI
	500	Outlander MAX STD Right	07 - 12	767 SI	
	500	Outlander MAX XT Left	07 - 12	754 SI	754 SI
	500	Outlander MAX XT Right	07 - 12	767 SI	
	500	Outlander STD Left	07 - 12	754 SI	754 SI
	500	Outlander STD Right	07 - 12	767 SI	
	500	Outlander XT Left	07 - 12	754 SI	754 SI
	500	Outlander XT Right	07 - 12	767 SI	
	500	Renegade Left	08 - 11	754 SI	754 SI
	500	Renegade Right	08 - 11	767 SI	
	500	Renegade Left	12 - 13	911 SI	
	500	Renegade Right	12 - 13	910 SI	910 SI
	500	Renegade Left	14 - 14	911 SI	911 SI
	500	Renegade Right	14 - 14	910 SI	910 SI
	560	Sonic	86 - 14	519 SI	
	650	Outlander Left	13 - 15	911 SI	
	650	Outlander Right	13 - 15	910 SI	910 SI
	650	Outlander 6x6 Left	14 - 18	911 SI	911 SI
	650	Outlander 6x6 Right	14 - 18	910 SI	910 SI
	650	Outlander MAX Left	13 - 15	911 SI	
	650	Outlander MAX Right	13 - 15	910 SI	910 SI
	650	Outlander MAX STD Left	07 - 12	754 SI	754 SI
	650	Outlander MAX STD Right	07 - 12	767 SI	
	650	Outlander MAX XT Left	07 - 12	754 SI	754 SI
	650	Outlander MAX XT Right	07 - 12	767 SI	
	650	Outlander STD Left	07 - 12	754 SI	754 SI
	650	Outlander STD Right	07 - 12	767 SI	
	650	Outlander XT Left	07 - 12	754 SI	754 SI
	650	Outlander XT Right	07 - 12	767 SI	
	800	Commander Left	11 - 14	638 SI	611 SI
	800	Commander Right	11 - 14	611 SI	
	800	Commander MAX R EFI Left	18 - 20	971 PSI	754 PSI
	800	Commander MAX R EFI Right	18 - 20	972 PSI	
	800	Commander R EFI Left	18 - 18	971 PSI	754 PSI
	800	Commander R EFI Right	18 - 18	972 PSI	
	800	Outlander Left	12 - 15	911 SI	
	800	Outlander Right	12 - 15	910 SI	910 SI
	800	Outlander MAX Left	13 - 14	911 SI	



RECOMMENDED
1xx - 2xx = Scooter Pads
5xx - 9xx = Street, Off Road & Racing Pads
2xxx = Brake Shoes




CAN-AM				
800	Outlander MAX Right	13 - 14	910 SI	910 SI
800	Outlander MAX LTD Left	07 - 11	754 SI	754 SI
800	Outlander MAX LTD Right	07 - 11	767 SI	
800	Outlander MAX STD Left	07 - 11	754 SI	754 SI
800	Outlander MAX STD Right	07 - 11	767 SI	
800	Outlander MAX XT Left	07 - 11	754 SI	754 SI
800	Outlander MAX XT Right	07 - 11	767 SI	
800	Outlander STD Left	07 - 11	754 SI	754 SI
800	Outlander STD Right	07 - 11	767 SI	
800	Outlander XT Left	07 - 11	754 SI	754 SI
800	Outlander XT Right	07 - 11	767 SI	
800	Renegade Left	08 - 11	754 SI	754 SI
800	Renegade Right	08 - 11	767 SI	
800	Renegade Left	12 - 13	911 SI	
800	Renegade Right	12 - 13	910 SI	910 SI
800	Renegade Left	14 - 15	911 SI	911 SI
800	Renegade Right	14 - 15	910 SI	910 SI
800	Renegade EFi Left	07 - 11	754 SI	754 SI
800	Renegade EFi Right	07 - 11	767 SI	
800	Renegade X Left	08 - 11	754 SI	754 SI
800	Renegade X Right	08 - 11	767 SI	
900	X3 Left	17 - 19	957 PSI	957 PSI
900	X3 Right	17 - 19	956 PSI	956 PSI
900	X3 MAX Left	17 - 19	957 PSI	957 PSI
900	X3 MAX Right	17 - 19	956 PSI	956 PSI
900	X3 MAX Turbo Left	18 - 19	957 PSI	957 PSI
900	X3 MAX Turbo Right	18 - 19	956 PSI	956 PSI
900	X3 MAX Turbo R Left	18 - 19	957 PSI	957 PSI
900	X3 MAX Turbo R Right	18 - 19	956 PSI	956 PSI
900	X3 Turbo Left	18 - 19	957 PSI	957 PSI
900	X3 Turbo Right	18 - 19	956 PSI	956 PSI
900	X3 Turbo R Left	18 - 19	957 PSI	957 PSI
900	X3 Turbo R Right	18 - 19	956 PSI	956 PSI
1000	Commander Left	16 - 17	971 PSI	754 PSI
1000	Commander Right	16 - 17	972 PSI	
1000	Commander MAX Left	14 - 17	971 PSI	754 PSI
1000	Commander MAX Right	14 - 17	972 PSI	
1000	Commander MAX R EFI Left	18 - 19	971 PSI	754 PSI
1000	Commander MAX R EFI Right	18 - 19	972 PSI	
1000	Commander R EFI Left	18 - 20	971 PSI	754 PSI
1000	Commander R EFI Right	18 - 20	972 PSI	
1000	Maverick Left	14 - 18	971 PSI	754 PSI
1000	Maverick Right	14 - 18	972 PSI	
1000	Maverick MAX Left	14 - 18	971 PSI	754 PSI
1000	Maverick MAX Right	14 - 18	972 PSI	
1000	Outlander Left	12 - 15	910 SI	910 SI
1000	Outlander Right	12 - 15	911 SI	
1000	Outlander 6x6 Left	14 - 18	911 SI	911 SI
1000	Outlander 6x6 Right	14 - 18	910 SI	910 SI
1000	Outlander MAX Left	12 - 18	911 SI	
1000	Outlander MAX Right	12 - 18	910 SI	910 SI
1000	Renegade Left	12 - 13	911 SI	
1000	Renegade Right	12 - 13	910 SI	910 SI
1000	Renegade Left	14 - 18	911 SI	911 SI
1000	Renegade Right	14 - 18	910 SI	910 SI
1330	Spyder F3	15 - 19	900 HS*	948 HS
1330	Spyder F3 Limited	16 - 19	900 HS*	948 HS
1330	Spyder F3-S	15 - 19	900 HS*	948 HS
1330	Spyder F3-T	16 - 19	900 HS*	948 HS
1330	Spyder RS	14 - 16	900 HS*	948 HS
1330	Spyder RS RSS	13 - 13	900 HS*	948 HS
1330	Spyder RSS	14 - 15	900 HS*	948 HS

* = 2 sets required / 2 jeux pour l'Avant.
Full compound selection, see under "Brake pad 1:1 Drawings" / Sélection complète de composés, voir "1:1 Schémas Plaquettes de frein".

RECOMMENDED
1xx - 2xx = Scooter Pads
5xx - 9xx = Street, Off Road & Racing Pads
2xxx = Brake Shoes

CAN-AM					
	1330	Spyder RSS			
		Special Series	15 - 15	900 HS*	948 HS
	1330	Spyder RT	14 - 18	900 HS*	948 HS
	1330	Spyder RT Limited	13 - 19	900 HS*	948 HS
	1330	Spyder RT RTS	13 - 13	900 HS*	948 HS
	1330	Spyder RTS	14 - 15	900 HS*	948 HS
	1330	Spyder RTS			
		Special Series	15 - 15	900 HS*	948 HS
	1330	Spyder ST	14 - 16	900 HS*	948 HS
	1330	Spyder ST Limited	13 - 15	900 HS*	948 HS
	1330	Spyder ST STS	13 - 13	900 HS*	948 HS
	1330	Spyder STS	14 - 15	900 HS*	948 HS
	1330	Spyder STS			
		Special Series	15 - 15	900 HS*	948 HS
CANNONDALE					
MX	400		00 - 03	694 RSI	632 RSI
	440	Blaze Left	03 - 03	754 SI	754 SI
	440	Blaze Right	03 - 03	767 SI	
	440	Cannibal Left	03 - 03	754 SI	754 SI
	440	Cannibal Right	03 - 03	767 SI	
	440	Glamis Left	03 - 03	754 SI	754 SI
	440	Glamis Right	03 - 03	767 SI	
	440	Moto Left	03 - 03	754 SI	754 SI
	440	Moto Right	03 - 03	767 SI	
	440	Speed Left	03 - 03	754 SI	754 SI
	440	Speed Right	03 - 03	767 SI	
C	440	R	03 - 03	694 RSI	632 RSI
E	440	, A, R	03 - 03	694 RSI	632 RSI
S	440		03 - 03	566 HF	632 HF
X	440		03 - 03	694 RSI	632 RSI
CCM					
	450	MX	08 - 10	671 RSI	790 RSI
GP	450		16 - 16	671 SI	675 SI
604	600	RS	01 - 01	671 HF	675 HF
604E	600	Sport	99 - 01	671 SI	675 SI
604E	600	Supermoto	99 - 01	671 SI	675 SI
C25	600		96 - 98	671 SI	675 SI
	644	DS	03 - 06	671 HF	675 HF
	644	R30	02 - 06	671 HF	675 HF
CECTEK					
	500	EFI Gladiator	09 - 13	810 HF*	544 HF
	500	EFI King Cobra	09 - 13	878 HF*	544 HF
	500	EFI Quadrift	09 - 11	878 HF*	544 HF
	500	i Estoc	10 - 10	878 HF*	544 HF
CF MOTO					
	125	Papio	17 - 17	688 HF	784 HF
	400	NK Efi	17 - 17	674 HS*	675 LS
	450	C-Force L	16 - 17	914 SI*	799 SI
	450	G-Force L	16 - 17	914 SI*	799 SI
CF	500	Terralander	13 - 15	914 SI*	799 SI
	550	C-Force	16 - 17	914 SI*	799 SI
	550	U-Force Left	15 - 16	638 SI	
	550	U-Force Right	15 - 16	611 SI	
	550	Z-Force Left	15 - 16	638 SI	
	550	Z-Force Right	15 - 16	611 SI	
CF	625	Terralander	11 - 15	914 SI*	799 SI
	650	NK	14 - 16	674 HS*	675 LS
	650	NK Efi	17 - 17	674 HS*	675 LS
	650	TK	14 - 15	674 HS*	675 LS
	800	Z-Force EX Left	15 - 15	638 SI	
	800	Z-Force EX Right	15 - 15	611 SI	
CF	800	Terralander	12 - 14	914 SI*	799 SI

RECOMMENDED
1xx - 2xx = Scooter Pads
5xx - 9xx = Street, Off Road & Racing Pads
2xxx = Brake Shoes

COBRA					
CX	50	Big Wheel	10 - 14	794 RSI	794 RSI
CX	50	Junior	07 - 10	794 RSI	
CX	50	Junior	11 - 13	794 RSI	794 RSI
CX	50	Senior	07 - 13	794 RSI	794 RSI
CPI					
	50	Aragon Club	07 - 09	141 HF	
	50	Aragon GP	06 - 09	141 HF	
	50	Aragon SP	07 - 09	141 HF	
	50	Baby	02 - 02	101 HF	2028
	50	Freaky	07 - 07	141 HF	
	50	GTR	02 - 02	120 HF	
	50	GTR	03 - 09	157 HF	123 HF
	50	GTS	02 - 03	120 HF	145 HF
	50	Hussar	01 - 02	101 HF	2028
	50	Hussar	03 - 06	141 HF	2028
	50	Mars	01 - 02	101 HF	2028
	50	Oliver	03 - 12	141 HF	2028
	50	Oliver City	03 - 12	141 HF	2028
	50	Oliver Sport	03 - 12	141 HF	2028
	50	Popcorn	01 - 02	101 HF	2028
	50	Popcorn	03 - 06	141 HF	2032
	50	Supermoto, Supercross	03 - 09	105 HF	105 HF
	125	Aragon GP	07 - 12	141 CT	
	125	GTR, GTS	02 - 03	120 CT	143 CT
	125	Sahel	02 - 02	694 HF	604 HF
	125	Supermoto	07 - 12	559 HF	
	125	X-Large	02 - 03	157 CT*	157 CT
	200	GTR, GTS	02 - 03	120 CT	143 CT
	200	X-Large	02 - 03	157 CT*	157 CT
	250	XS ATV	07 - 08	810 SI*	
XS	250	Quad	06 - 08	544 SI*	848 SI
DERBI					
	50	AJP Caliper			
		incl. pin/spring	90 - 19	188 HF	
	50	Atlantis	99 - 08	105 HF	2181
	50	Atlantis 4T	04 - 10	105 HF	
	50	Atlantis Bullet	04 - 05	105 HF	
	50	Atlantis H2O	01 - 01	105 HF	
	50	Atlantis H2O Wave	01 - 01	105 HF	
	50	Atlantis Wave	01 - 02	105 HF	
	50	Aventura	96 - 96	105 HF	2206
	50	Black Devil	04 - 04	168 HF	105 HF
	50	Boulevard	09 - 13	177 HF	
	50	DRD Pro corse	06 - 08	189 MS	105 HF
	50	DRD Racing R	05 - 10	168 HF	105 HF
	50	DRD Racing R Ltd.	05 - 05	168 HF	105 HF
	50	DRD Racing SM	05 - 05	168 HF	105 HF
	50	DRD Racing SM Ltd.	05 - 05	168 HF	105 HF
	50	Easy	96 - 98	138 HF	2181
	50	Fenix	94 - 07	105 HF	105 HF
	50	Furax	96 - 98	105 HF	105 HF
	50	Hunter	97 - 99	105 HF	2181
	50	Manhattan	99 - 99	105 HF	2181
	50	Predator LC	99 - 02	105 HF	105 HF
	50	Predator O2	00 - 02	105 HF	105 HF
	50	Rambla	06 - 06	105 HF	105 HF
	50	Savannah	91 - 97	105 HF	
	50	Senda DRD Pro SM	05 - 11	157 HF	167 HF
	50	Senda L	99 - 01	105 HF	105 HF
	50	Senda R DRD	03 - 04	148 HF*	105 HF
	50	Senda R, X-Treme	94 - 04	105 HF	105 HF
	50	Senda SM DRD	03 - 04	105 HF*	105 HF
	50	Senda SM DRD			
		Black Edition	03 - 04	168 HF	105 HF
	50	Senda SM, X-Treme	99 - 06	105 HF	105 HF
	50	Sonar	10 - 11	142 HF	

* = 2 sets required / 2 jeux pour l'Avant.
Full compound selection, see under "Brake pad 1:1 Drawings" / Sélection complète de composés, voir "1:1 Schémas Plaquettes de frein".

				RECOMMENDED 1xx - 2xx = Scooter Pads 5xx - 9xx = Street, Off Road & Racing Pads 2xxx = Brake Shoes	
DERBI					
	50	Stinger	96 - 96	105 HF	
	50	Vamos FL	95 - 99	105 HF	2181
	50	Vamos L	95 - 95	105 HF	2181
	50	Vamos R (A.J.P. cal.)	95 - 95	105 HF	2206
	50	Vamos R (Brembo cal.)	95 - 95	123 HF	2206
	50	Variant Sport-R	01 - 13	105 HF	2206
	50	X-Race R	05 - 09	105 HF	105 HF
	50	X-Treme R	05 - 05	105 HF	105 HF
DS	50		88 - 88	559 HF	
FD	50	Yumbo	84 - 84	559 HF	
FD	50	Yumbo Extra	87 - 87	559 HF	
FDS	50		87 - 87	559 HF	
FDT	50		87 - 87	559 HF	
FDT	50	Coppa	85 - 85	559 HF	
FDX	50		89 - 89	559 HF	
GP	50		01 - 01	105 HF	
GP1	50		01 - 03	105 HF	105 HF
GP1	50		05 - 05	730 HF	559 HF
GPR	50	Nude	04 - 10	730 HF	559 HF
GPR	50	R	98 - 03	148 HF	105 HF
GPR	50	Racing	04 - 13	730 HF	559 HF
GPX1	50		06 - 06	189 MS	105 HF
ST	50	Paddock	96 - 99	105 HF	2181
	75	GPR	89 - 89	607 HF	559 HF
	75	Sport, Coppa	84 - 84	559 HF	
GPR	75	Sport	92 - 92	607 HF	559 HF
GPR	80	Cup	04 - 05	821 HS	559 HF*
	100	Atlantis 4T	04 - 06	105 HF	
	100	Atlantis O2/H2O	01 - 01	105 HF	
	125	Atmosphere	99 - 99	148 CT	
	125	Boulevard	03 - 07	167 CT	2205
	125	Mulhacen	07 - 07	774 HF	519 HF
	125	Mulhacen	08 - 11	859 HF	585 HF
	125	Predator	99 - 99	105 CT	
	125	Rambla	08 - 14	108 CT	152 CT
	125	Senda Baja	06 - 12	168 HF	167 CT
	125	Senda DRD SM	10 - 14	157 HF	203 HF
	125	Senda R 4T	04 - 12	774 HF	559 HF
	125	Senda X-Treme SM 4T	04 - 05	774 HF	559 HF
	125	Terra	07 - 07	559 HF	519 HF
	125	Terra	08 - 13	859 HF	585 HF
	125	Terra Adventure	08 - 14	859 HF	585 HF
GP1	125		05 - 06	730 HF	559 HF
GPR	125		05 - 06	821 HS	559 HF*
GPR	125	Nude	05 - 08	821 HS	559 HF*
GPR	125	Racing	09 - 09	821 HS	559 HF*
	150	Boulevard	03 - 09	167 CT	2205
	180	Predator	99 - 99	148 CT	
DXR	200	Quad (Front disc)	04 - 07	544 SI*	586 SI
DXR	200	Quad (Front drum)	04 - 05	2028	586 SI
DXR	200	Quad (Front drum)	04 - 05	2028	611 SI
	250	RC	85 - 85	519 HF	
DXR	250	Quad (Front disc)	04 - 07	544 SI*	586 SI
DXR	250	Quad (Front drum)	04 - 05	2028	586 SI
DXR	250	Quad (Front drum)	04 - 05	2028	611 SI
GP1	250		05 - 09	730 HF	772 HF
	300	Rambla	08 - 12	108 MS	152 MS
	659	Mulhacen	05 - 05	788 HS	730 LS
	659	Mulhacen	06 - 07	762 HS	730 LS
	659	Mulhacen Cafe	08 - 08	762 HS	730 LS
DUCATI					
	250	Desmo	70 - 77	506 HF	
	350		75 - 78	519 HF	
	350	Desmo	70 - 77	506 HF	
	350	F3	86 - 90	506 HF*	506 HF
	350	GTV	77 - 77	519 HF	519 HF
	350	Indiana	86 - 91	594 HF	519 HF

				RECOMMENDED 1xx - 2xx = Scooter Pads 5xx - 9xx = Street, Off Road & Racing Pads 2xxx = Brake Shoes	
DUCATI					
	350	Paso	86 - 86	519 HF*	519 HF
	350	Sport	77 - 80	519 HF*	519 HF
	400	Monster (Japan)	01 - 06	706 HS	519 LS
	400	Scrambler Sixty Two	16 - 20	674 HS	675 LS
	400	SS, Junior	92 - 97	566 HF*	519 HF
	400	SS, Nuda	92 - 96	566 HF	519 HF
	500	GTV	77 - 82	519 HF*	519 HF
	500	Pantah	85 - 89	519 HF*	519 HF
	500	Sport	77 - 82	506 HF*	506 HF
	500	Sport Desmo	77 - 82	519 HF*	
	500	Twin GTL	75 - 80	519 HF	
	502	Single	93 - 93	566 HF*	519 HF
	502	Supermono	93 - 93	566 HF*	519 HF
	600	Monster	00 - 01	706 HS	519 LS
	600	Pantah TL, SL	78 - 89	506 HF*	506 HF
	600	SL, TL Pantah	76 - 89	506 HF*	519 HF
	600	SS Supersport	95 - 00	566 HF	519 HF
M	600	Monster	94 - 99	566 HF	519 HF
	620	Monster Dark i.e.	02 - 06	706 HS	519 LS
	620	Monster i.e., s i.e.	02 - 06	706 HS*	519 LS
	620	Multistrada	05 - 06	671 HS*	730 LS
	620	Multistrada Dark	05 - 06	706 HS	730 LS
	620	Sport	03 - 06	706 HS*	730 LS
	650	Indiana	86 - 89	594 HF	519 HF
	650	Pantah	84 - 89	506 HF*	506 HF
	695	Monster	07 - 12	671 HS*	519 LS
	696	Monster	08 - 12	706 HS*	730 LS
	748	, S	99 - 02	706 HS*	519 LS
	748	Biposto	95 - 98	566 HF*	519 HF
	748	R	00 - 00	706 HS*	519 LS
	748	R	01 - 02	762 HS*	519 LS
	748	SP	95 - 97	566 HF*	519 HF
	748	SPS	98 - 99	706 HS*	519 LS
	749	, S	03 - 07	762 HS*	730 LS
	749	R	04 - 07	762 HS*	730 LS
	750	F1	86 - 98	506 HF*	506 HF
	750	GT	74 - 76	506 HF*	
	750	Indiana	85 - 86	594 HF	519 HF
	750	Monster	96 - 99	566 HF*	519 HF
	750	Monster	00 - 01	706 HS*	519 LS
	750	Monster i.e.	02 - 02	706 HS*	519 LS
	750	Paso	86 - 88	506 HF*	519 HF
	750	Sport	74 - 76	523 HF*	
	750	Sport	90 - 90	506 HS*	506 LS
	750	Sport	00 - 02	706 HS	730 LS
	750	SS	74 - 76	506 HF*	506 HF
	750	SS	91 - 98	566 HF	506 HF
	750	SS Supersport	95 - 99	566 HF	519 HF
	750	SS, Carenara	92 - 98	566 HF	519 HF
	750	SS, Nuda	92 - 92	566 HF	519 HF
	750	Super Sport	92 - 94	566 HF*	519 HF
	750	Super Sport	00 - 02	706 HS*	730 LS
	795	Monster	12 - 12	706 HS*	730 LS
	796	Hypermotard ABS	10 - 12	706 HS*	730 LS
	796	Monster	11 - 14	706 HS*	730 LS
	796	Monster ABS	11 - 14	706 HS*	730 LS
	797	Monster	17 - 21	900 HS	675 LS
	797	Monster+	17 - 20	900 HS	675 LS
	800	Monster Dark i.e., s i.e.	03 - 07	706 HS*	519 LS
	800	Monster i.e., s i.e.	03 - 07	706 HS*	519 LS
	800	Monster S2R	05 - 07	671 HS*	519 LS
	800	Monster S2R ABS	05 - 07	671 HS*	519 LS
	800	Scrambler	17 - 18	900 HS	675 LS
	800	Scrambler Classic	15 - 18	900 HS	675 LS
	800	Scrambler CR	17 - 21	900 HS	675 LS
	800	Scrambler CR Cafe Racer	17 - 21	900 HS	675 LS
	800	Scrambler Enduro	15 - 16	900 HS	675 LS
	800	Scrambler Flat Track Pro	16 - 16	900 HS	675 LS

* = 2 sets required / 2 jeux pour l'Avant.
Full compound selection, see under "Brake pad 1:1 Drawings" / Sélection complète de composés, voir "1:1 Schémas Plaquettes de frein".

				RECOMMENDED 1xx - 2xx = Scooter Pads 5xx - 9xx = Street, Off Road & Racing Pads 2xxx = Brake Shoes	
DUCATI					
	800	Scrambler Full Throttle	15 - 21	900 HS	675 LS
	800	Scrambler Icon	15 - 21	900 HS	675 LS
	800	Scrambler Icon Dark	20 - 21	900 HS	675 LS
	800	Scrambler Mach 2.0	18 - 19	900 HS	675 LS
	800	Scrambler SCR	20 - 20	900 HS*	675 LS
	800	Scrambler Street			
		Classic	17 - 18	900 HS	675 LS
	800	Scrambler Urban			
		Enduro	16 - 16	900 HS	675 LS
	800	Scrambler-X DS			
		Desert Sled	17 - 21	900 HS	675 LS
	800	Sport	03 - 06	706 HS*	730 LS
	800	Supersport	03 - 06	706 HS*	730 LS
	821	Hypermotard	13 - 16	900 HS*	730 LS
	821	Hypermotard ABS	13 - 16	900 HS*	730 LS
	821	Hypermotard SP	13 - 16	900 HS*	730 LS
	821	Hypermotard SP ABS	13 - 16	900 HS*	730 LS
	821	Hyperstrada	13 - 16	900 HS*	730 LS
	821	Hyperstrada ABS	13 - 16	900 HS*	730 LS
	821	Monster	14 - 21	900 HS*	730 LS
	821	Monster Dark	15 - 16	900 HS*	730 LS
	821	Monster Stealth	19 - 21	900 HS*	730 LS
	848		08 - 10	706 HS*	730 LS
	848	EVO	11 - 12	841 HS*	730 LS
	848	Streetfighter	12 - 15	706 HS*	730 LS
	848	Streetfighter S	12 - 15	841 HS*	730 LS
	851	Strada	89 - 89	566 HF*	519 HF
	851	Strada	91 - 92	566 HF*	506 HF
	851	Superbike	90 - 90	566 HF*	519 HF
	860	GT	75 - 77	506 HF	
	860	GT	85 - 85	506 HF	506 HF
	888	Roche Replica	91 - 91	566 HF*	506 HF
	888	SP V	93 - 93	566 HF*	519 HF
	888	SP4	92 - 95	566 HF*	519 HF
	888	SPO	93 - 93	566 HF*	519 HF
	888	SPS	92 - 95	566 HF*	519 HF
	888	Strada	93 - 93	566 HF*	519 HF
	888	Superbike	93 - 93	566 HF*	519 HF
	899	Panigale	14 - 15	900 HS*	730 LS
	900	FE	97 - 98	566 HF*	519 HF
	900	GTS	77 - 79	506 HF	
	900	M, IL Monster	93 - 99	566 HF*	519 HF
	900	Mike Hailwood Replica	85 - 86	506 HF*	506 HF
	900	Monster	00 - 01	706 HS*	519 LS
	900	Monster i.e.	02 - 02	706 HS*	519 LS
	900	S2 Desmo	85 - 85	506 HF*	506 HF
	900	SL	92 - 97	566 HF*	519 HF
	900	Sport	77 - 78	506 HF*	506 HF
	900	SS	78 - 89	506 HF*	506 HF
	900	SS	90 - 94	566 HF*	519 HF
	900	SS Supersport	95 - 97	566 HF	519 HF
	900	SSR	92 - 92	566 HF*	519 HF
	900	Super Sport	98 - 02	706 HS*	730 LS
906	900	Paso	89 - 89	506 HF*	519 HF
907	900	I. E.	90 - 93	566 HF*	519 HF
M	900	Street Monster	94 - 99	566 HF*	519 HF
MH	900		00 - 01	706 HS*	519 LS
	916	Biposto	94 - 98	566 HF*	519 HF
	916	Monster S4	01 - 03	706 HS*	519 LS
	916	Sport Touring 4	99 - 01	706 HS*	730 LS
	916	SPS	97 - 98	706 HS*	519 LS
	939	Hypermotard	16 - 18	900 HS*	730 LS
	939	Hypermotard SP	16 - 18	900 HS*	730 LS
	939	Hyperstrada	16 - 16	900 HS*	730 LS
	939	SuperSport	17 - 21	900 HS*	730 LS
	939	SuperSport S	17 - 21	900 HS*	730 LS
	944	Sport Touring	98 - 03	706 HS*	730 LS
	944	ST2	97 - 03	706 HS*	730 LS

				RECOMMENDED 1xx - 2xx = Scooter Pads 5xx - 9xx = Street, Off Road & Racing Pads 2xxx = Brake Shoes	
DUCATI					
	950	Hypermotard	19 - 19	900 HS*	730 LS
	950	Hypermotard SP	19 - 19	900 HS*	730 LS
	950	Multistrada	17 - 21	900 HS	671 LS
	950	Multistrada S	19 - 21	900 HS	671 LS
	955	Panigale V2	20 - 21	900 SP*	730 LS
	959	Panigale	16 - 20	900 HS*	730 LS
	959	Panigale Corse	18 - 20	900 HS*	730 LS
D16RR	990	Desmosedici RR	07 - 08	841 HS*	730 LS
	992	ST3	04 - 07	706 HS*	730 LS
	992	ST3s ABS	06 - 07	706 HS*	730 LS
	996	, SPS	99 - 01	706 HS*	519 LS
	996	Monster S4R	04 - 06	706 HS*	519 LS
	996	R	01 - 01	762 HS*	519 LS
	996	ST4s	02 - 06	706 HS*	730 LS
	996	ST4s ABS	03 - 06	706 HS*	730 LS
	998	, S	02 - 04	706 HS*	519 LS
	998	Monster S4Rs	06 - 06	762 HS*	730 LS
	998	Panigale V4 R	19 - 20	841 SP*	730 LS
	998	R	02 - 04	762 HS*	519 LS
	999		03 - 07	762 HS*	730 LS
	999	Monster S4R	07 - 08	762 HS*	730 LS
	999	Monster S4RS	07 - 08	762 HS*	730 LS
	999	R	03 - 07	762 HS*	730 LS
	999	S	03 - 07	762 HS*	730 LS
	1000	/6 Mike Hailwood			
		Replica	85 - 85	506 HF*	506 HF
	1000	Biposto	07 - 08	674 HS*	675 LS
	1000	GT	05 - 10	674 HS*	675 LS
	1000	GT Touring	09 - 10	674 HS*	675 LS
	1000	Hypermotard	06 - 06	762 HS*	730 LS
	1000	Mille Replica	84 - 85	506 HF*	506 HF
	1000	Monster Dark i.e., s i.e.	03 - 06	706 HS*	519 LS
	1000	Monster i.e., s i.e.	03 - 06	706 HS*	519 LS
	1000	Monster S2R	06 - 07	706 HS*	730 LS
	1000	Multistrada	07 - 07	706 HS*	730 LS
	1000	Multistrada DS	03 - 06	706 HS*	730 LS
	1000	Multistrada S DS	05 - 06	706 HS*	730 LS
	1000	Paul Smart	05 - 08	674 HS*	675 LS
	1000	S2 Desmo	85 - 85	506 HF*	506 HF
	1000	Sport	05 - 09	674 HS*	675 LS
	1000	Sport S	05 - 09	674 HS*	675 LS
	1000	Supersport DS	03 - 06	706 HS*	730 LS
	1098		07 - 08	841 HS*	730 LS
	1098	R	08 - 10	841 SP*	730 LS
	1098	R Bayliss LE	09 - 10	841 SP*	730 LS
	1098	S	07 - 08	841 HS*	730 LS
	1098	Streetfighter	09 - 14	841 HS*	730 LS
	1098	Streetfighter S	09 - 13	841 HS*	730 LS
	1100	Hypermotard	07 - 13	841 HS*	730 LS
	1100	Hypermotard EVO	10 - 13	706 HS*	730 LS
	1100	Hypermotard EVO SP	10 - 12	841 HS*	730 LS
	1100	Monster	09 - 13	706 HS*	730 LS
	1100	Monster ABS	09 - 10	706 HS*	730 LS
	1100	Monster EVO	11 - 13	706 HS*	730 LS
	1100	Monster EVO ABS	11 - 13	706 HS*	730 LS
	1100	Monster S	09 - 13	706 HS*	730 LS
	1100	Monster S ABS	09 - 10	706 HS*	730 LS
	1100	Multistrada	07 - 09	706 HS*	730 LS
	1100	Multistrada S	07 - 09	706 HS*	730 LS
	1100	Panigale V4	18 - 20	841 SP*	730 LS
	1100	Panigale V4 S	18 - 20	841 SP*	730 LS
	1100	Panigale V4 S Corse	19 - 19	841 SP*	730 LS
	1100	Panigale V4 Speciale	18 - 19	841 SP*	730 LS
	1100	Scrambler	18 - 19	900 HS*	675 LS
	1100	Scrambler Desert X	20 - 20	900 SP*	675 LS
	1100	Scrambler Special	18 - 19	900 HS*	675 LS
	1100	Scrambler Sport	18 - 19	900 HS*	675 LS
	1100	Streetfighter V4 S	20 - 21	841 SP*	730 LS

* = 2 sets required / 2 jeux pour l'Avant.
Full compound selection, see under "Brake pad 1:1 Drawings" / Sélection complète de composés, voir "1:1 Schémas Plaquettes de frein".



RECOMMENDED
1xx - 2xx = Scooter Pads
5xx - 9xx = Street, Off Road & Racing Pads
2xxx = Brake Shoes




DUCATI					
	1198		09 - 13	841 SP*	730 LS
	1198	S	09 - 12	841 SP*	730 LS
	1198	SP	11 - 12	841 SP*	730 LS
	1199	Panigale	12 - 14	841 SP*	730 LS
	1199	Panigale R	13 - 15	841 SP*	730 LS
	1199	Panigale S	12 - 14	841 SP*	730 LS
	1199	Superleggera	14 - 14	841 SP*	730 LS
	1200	Diavel	11 - 18	901 HS*	674 LS
	1200	Diavel Strada	11 - 14	901 HS*	674 LS
	1200	Monster	14 - 21	900 HS*	730 LS
	1200	Monster 25			
		Anniversario	19 - 19	841 HS*	730 LS
	1200	Monster R	16 - 19	841 HS*	730 LS
	1200	Monster S	14 - 21	841 HS*	730 LS
	1200	Multistrada	10 - 14	706 SP*	730 LS
	1200	Multistrada	15 - 16	900 SP*	671 LS
	1200	Multistrada Enduro	16 - 18	900 SP*	671 LS
	1200	Multistrada Enduro Pro	18 - 18	900 SP*	671 LS
	1200	Multistrada S	15 - 17	841 SP*	671 LS
	1200	Multistrada S D-air	15 - 17	841 SP*	671 LS
	1200	Multistrada S GT	12 - 14	706 SP*	730 LS
	1200	Multistrada S			
		Pikes Peak	11 - 14	706 SP*	730 LS
	1200	Multistrada S			
		Pikes Peak	16 - 17	841 SP*	671 LS
	1200	Multistrada S Sport	10 - 14	706 SP*	730 LS
	1200	Multistrada S Touring	10 - 14	706 SP*	730 LS
	1200	Xdiavel	16 - 18	901 HS*	674 LS
	1200	Xdiavel S	16 - 18	901 HS*	674 LS
	1260	Diavel	19 - 20	901 HS*	674 LS
	1260	Diavel S	19 - 20	901 HS*	674 LS
	1260	Multistrada	18 - 18	841 SP*	671 LS
	1260	Multistrada Enduro	19 - 21	900 SP*	671 LS
	1260	Multistrada S	18 - 19	841 SP*	671 LS
	1260	Multistrada S D-air	18 - 19	841 SP*	671 LS
	1260	Multistrada S			
		Grand Tour	20 - 20	841 SP*	671 LS
	1260	Multistrada S			
		Pikes Peak	18 - 19	841 SP*	671 LS
	1260	Xdiavel	19 - 19	901 HS*	674 LS
	1260	Xdiavel S	19 - 19	901 HS*	674 LS
	1299	Panigale	15 - 17	841 SP*	730 LS
	1299	Panigale R	15 - 17	841 SP*	730 LS
	1299	Panigale R Final Edition	17 - 20	841 SP*	730 LS
	1299	Panigale S	15 - 17	841 SP*	730 LS
	1299	Panigale S Anniversario	17 - 17	841 SP*	730 LS
	1299	Superleggera	17 - 17	841 SP*	730 LS
EBR					
	1190	RS	12 - 15	856 HS	857 LS
	1190	RX	14 - 15	856 HS	857 LS
	1190	SX	14 - 15	856 HS	857 LS
ENERGICA					
		Ego	15 - 21	901 SP*	730 LS
		Eva EsseEsse9	18 - 21	901 SP*	730 LS
		Eva Ribelle	15 - 21	901 SP*	730 LS
E-TON					
RXL	150	Viper	07 - 07	2012*	847 SI
VXL	250	Vector, ST Vector	06 - 07	544 SI*	847 SI
VTX	300	Vortex, ST Vortex	07 - 07	544 SI*	847 SI
VXL	300	Vector, ST Vector	07 - 13	544 SI*	847 SI
EXCELSIOR-HENDERSON					
	1386	Deadwood Special	00 - 00	739 H.HS	739 H.LS
	1386	Super X all models	99 - 99	739 H.HS	739 H.LS



RECOMMENDED
1xx - 2xx = Scooter Pads
5xx - 9xx = Street, Off Road & Racing Pads
2xxx = Brake Shoes




FANTIC					
	125	Caballero Flat Track	17 - 17	877 HS	675 LS
	125	Trial Professional	87 - 87	595 HF	595 HF
	125	Trial Progress 1	87 - 87	595 HF	
HP1	125	Sport	86 - 86	560 HF*	
HP1	125	Sport	87 - 87	574 HF*	
HP1	125	Strada	85 - 85	595 HF	
XX	125		20 - 21	840 RSI	790 RSI
	201	Trial Progress 2	87 - 87	595 HF	
	241	Trial Progress 2	87 - 87	595 HF	
	243	Trial	87 - 90	595 HF	595 HF
	250	Coach	91 - 98	519 HF	
	250	K-Roo	93 - 95	559 RSI	559 RSI
	250	Raider	85 - 85	588 HF	
	301	Trial	85 - 91	595 HF	
	301	Trial Progress 2	87 - 87	595 HF	
	303	Trial Professional	87 - 87	595 HF	595 HF
	305		89 - 90	559 RSI	559 RSI
	307	Trial	91 - 94	559 RSI	559 RSI
	343	Trial Progress 2	87 - 87	595 HF	595 HF
	500	Caballero	17 - 17	900 HS	675 LS
GAS GAS					
MC		E 5	21 - 21	794 RSI	794 RSI
	50	Wild HP	04 - 07	671 SI*	671 SI
MC	50		21 - 21	794 RSI	794 RSI
TXT	50	Boy	01 - 01	815 HF	815 HF
TXT	50	Boy	04 - 04	559 RSI	559 RSI
TXT	50	Rookie	02 - 03	815 HF	815 HF
MC	65		05 - 06	815 HF	815 HF
MC	65		21 - 21	783 RSI	783 RSI
TXT	80	Rookie	02 - 03	815 HF	815 HF
MC	85		21 - 21	671 RSI	791 RSI
	125	Delta	91 - 91	559 HF	
	125	Enducross	93 - 93	694 SI	586 SI
	125	Pampera	96 - 03	559 RSI	559 RSI
	125	Pampera	04 - 13	774 HF	815 HF
	125	Trial	91 - 91	559 RSI	
EC	125		97 - 99	671 SI	675 SI
EC	125		00 - 06	694 SI	604 SI
MC	125		03 - 13	694 RSI	604 RSI
MC	125		21 - 21	671 RSI	791 RSI
SM	125		02 - 13	566 HF	604 HF
TX	125	Randone	12 - 13	802 RSI	803 RSI
TXT	125		04 - 13	802 RSI	803 RSI
TXT	125	(Formula cal.)	12 - 13	885 RSI	803 RSI
TXT	125	GP	19 - 20	963 RSI	803 RSI
TXT	125	Pro Racing	14 - 14	939 RSI	803 RSI
TXT	125	Pro Replica	13 - 13	939 RSI	803 RSI
TXT	125	Racing	19 - 21	963 RSI	803 RSI
	200	Pampera	99 - 08	559 RSI	559 RSI
	200	Wild HP	08 - 09	671 SI*	671 SI
EC	200		99 - 99	671 SI	675 SI
EC	200		00 - 09	694 SI	604 SI
EC	200		17 - 17	694 SI	790 SI
EC	200	Hobby	07 - 16	694 SI	604 SI
EC	200	Ranger Enduro	19 - 19	671 SI	791 SI
TX	200		97 - 98	559 RSI	559 RSI
TXT	200		04 - 10	802 RSI	803 RSI
XC	200		18 - 19	694 SI	790 SI
	240	Wild HP	04 - 06	671 SI*	671 SI
	250	Pampera	96 - 99	559 RSI	559 RSI
	250	Pampera	02 - 13	774 HF	815 HF
	250	Trial	89 - 96	559 RSI	559 RSI
	250	Wild HP	08 - 08	671 SI*	671 SI
EC	250		97 - 99	671 SI	675 SI
EC	250		00 - 11	694 SI	604 SI
EC	250		12 - 20	694 SI	790 SI
EC	250		21 - 21	671 SI	791 SI

* = 2 sets required / 2 jeux pour l'Avant.
Full compound selection, see under "Brake pad 1:1 Drawings" / Sélection complète de composés, voir "1:1 Schémas Plaquettes de frein".

				RECOMMENDED 1xx - 2xx = Scooter Pads 5xx - 9xx = Street, Off Road & Racing Pads 2xxx = Brake Shoes	
GAS GAS					
EC	250	Enduro GP 18	18 - 19	694 SI	790 SI
EC	250	F	21 - 21	671 SI	791 SI
EC	250	fse	02 - 11	694 SI	604 SI
GT	250	Contact	92 - 93	559 RSI	559 RSI
MC	250		97 - 99	671 RSI	675 RSI
MC	250		00 - 13	694 SI	604 SI
MC	250	F	21 - 21	671 RSI	791 RSI
SM	250		02 - 13	566 HF	604 HF
TXT	250		04 - 07	802 RSI	803 RSI
TXT	250	(Formula cal.)	12 - 13	885 RSI	803 RSI
TXT	250	GP	19 - 20	963 RSI	803 RSI
TXT	250	Pro Racing	14 - 19	939 RSI	803 RSI
TXT	250	Pro Replica	13 - 14	939 RSI	803 RSI
TXT	250	Racing	19 - 21	963 RSI	803 RSI
XC	250		17 - 19	694 SI	790 SI
TX	270		97 - 98	559 RSI	559 RSI
	280	Pampera	04 - 08	774 HF	815 HF
TXT	280		04 - 04	802 RSI	803 RSI
TXT	280	(Formula cal.)	12 - 12	885 RSI	803 RSI
TXT	280	GP	19 - 20	963 RSI	803 RSI
TXT	280	Pro Racing	14 - 19	939 RSI	803 RSI
TXT	280	Pro Replica	13 - 13	939 RSI	803 RSI
TXT	280	Racing	19 - 21	963 RSI	803 RSI
	300	Wild HP	03 - 05	671 SI*	671 SI
EC	300		99 - 99	671 SI	675 SI
EC	300		00 - 11	694 SI	604 SI
EC	300		12 - 20	694 SI	790 SI
EC	300		21 - 21	671 SI	791 SI
EC	300	Enduro GP 18	18 - 19	694 SI	790 SI
EC	300	Ranger Enduro	19 - 19	671 SI	791 SI
TXT	300		04 - 06	802 RSI	803 RSI
TXT	300	(Formula cal.)	12 - 12	885 RSI	803 RSI
TXT	300	GP	19 - 20	963 RSI	803 RSI
TXT	300	Pro	07 - 11	802 RSI	803 RSI
TXT	300	Pro Racing	14 - 19	939 RSI	803 RSI
TXT	300	Pro Replica	13 - 13	939 RSI	803 RSI
TXT	300	Racing	19 - 21	963 RSI	803 RSI
XC	300		18 - 19	694 SI	790 SI
TX	320		97 - 99	559 RSI	559 RSI
	325	Halley PXC	86 - 86	559 RSI	559 RSI
	327	Trial	89 - 90	559 RSI	559 RSI
GT	327	Contact	89 - 90	559 RSI	559 RSI
EC	350	F	21 - 21	671 SI	791 SI
	370	Pampera	96 - 00	559 RSI	559 RSI
	400	Pampera	06 - 09	694 SI	604 SI
EC	400	fse	02 - 02	694 SI	604 SI
SM	400	fse	02 - 02	566 HF	604 HF
	450	Wild HP	03 - 09	671 SI*	671 SI
EC	450	fse	03 - 15	694 SI	604 SI
EC	450	FSR	07 - 16	694 SI	604 SI
MC	450	F	21 - 21	671 RSI	791 RSI
SM	450	fse	03 - 06	566 HF	604 HF
SM	450	FSR	07 - 13	566 HF	604 HF
	515	Wild HP	09 - 09	671 SI*	671 SI
EC	515	fsr	08 - 16	694 SI	604 SI
GILERA					
	50	AJP Caliper			
		incl. pin/spring	90 - 19	188 HF	
	50	Sioux	92 - 92	519 HF	519 HF
	80	TG 1, 2, 3	77 - 82	560 HF	
	125	Apache	91 - 94	608 HF	575 HF
	125	Arizona Hawk	86 - 89	519 HF	
	125	Crono	92 - 95	601 HF	519 HF
	125	Fast Bike	88 - 89	588 HF	
	125	Freestyle	92 - 95	601 HF	519 HF
	125	HX, HE	83 - 83	519 HF	
	125	KK, KR, KZ	86 - 91	588 HF	519 HF

				RECOMMENDED 1xx - 2xx = Scooter Pads 5xx - 9xx = Street, Off Road & Racing Pads 2xxx = Brake Shoes	
GILERA					
	125	MX1, MRX, SP01	89 - 93	601 HF	519 HF
	125	R1, R1S	90 - 92	588 HF	519 HF
	125	SP02	90 - 94	601 HF	519 HF
	125	TG 1, 2, 3 (alu wheels)	77 - 85	560 HF	
	125	TG1, GR1, RTX	77 - 85	560 HF	
CX	125		91 - 95	601 HF	519 HF
ER	125	Rally	87 - 87	588 HF	
MXR	125		90 - 90	588 HF	519 HF
RC	125	Top Rally	90 - 93	608 HF	575 HF
RRT	125	Nebraska	87 - 87	588 HF	
RX	125	Arizona Hawk	85 - 85	588 HF	
	200	Arizona Hawk	85 - 85	588 HF	
	200	ER	87 - 87	588 HF	
	200	RX	83 - 83	519 HF	
	250	Arizona Hawk	86 - 91	519 HF	
	250	Arizona Rally	86 - 91	519 HF	
	250	Arizona Rally	08 - 08	588 HF	519 HF
NGR	250		85 - 85	574 HF*	519 HF
	350	Dakota	85 - 85	588 HF	
	350	Dakota	86 - 89	594 HF	
	350	Saturno Bialbero	90 - 90	566 HF	519 HF
XRT	350		90 - 90	588 HF	519 HF
	500	Dakota	86 - 86	588 HF	
	500	Saturno Bialbero	90 - 90	566 HF	519 HF
	500	Saturno Piuma	90 - 94	566 HF	519 HF
	600	Nordwest	91 - 94	601 HF*	519 HF
	600	Supersport	02 - 02	762 HS*	730 LS
RC	600		88 - 88	588 HF	519 HF
RC	600	Top Rally	90 - 94	608 HF	575 HF
XRT	600		89 - 89	588 HF	519 HF
GOES					
	360	Max	08 - 14	914 SI*	
	520	Max	07 - 12	914 SI*	799 SI
G	520		07 - 12	914 SI*	799 SI
G	525		12 - 14	914 SI*	799 SI
G	620		11 - 14	914 SI*	799 SI
G	625	A	12 - 14	914 SI*	799 SI
HARLEY DAVIDSON					
		Livewire	19 - 21	900 H.HS*	730 LS
FLT		Series	88 - 99	579 H.HS*	668 H.LS
FXB		Series	74 - 77	679 H.HF	
FXE		Series	74 - 77	679 H.HF	513 H.HF
XL		Series	74 - 77	679 H.HF	
XLH		Series	88 - 99	579 H.HS*	669 H.LS
XG	500	Street	14 - 15	924 H.HF	924 H.HF
XG	500	Street	16 - 18	674 H.HF	671 H.HF
XG	750	Street	14 - 15	924 H.HF	924 H.HF
XG	750	Street	16 - 17	674 H.HF	671 H.HF
XG	750	Street Rod	18 - 20	674 H.HF*	671 H.HF
XL	883	C Sportster Custom	04 - 13	807 H.HS	808 H.LS
XL	883	L Sportster Low	06 - 13	807 H.HS	808 H.LS
XL	883	L Super Low	11 - 13	807 H.HS	808 H.LS
XL	883	L Super Low	14 - 18	934 H.HS	715 H.LS
XL	883	N Iron	13 - 13	807 H.HS	808 H.LS
XL	883	N Iron	14 - 18	934 H.HS	715 H.LS
XL	883	R Roadster	10 - 13	807 H.HS*	808 H.LS
XL	883	R Roadster	14 - 15	934 H.HS	715 H.LS
XL	883	R Sportster	00 - 03	826 H.HS	826 H.LS
XL	883	Sportster	04 - 13	807 H.HS	808 H.LS
XL	883	Sportster Custom	00 - 03	826 H.HS	826 H.LS
XL	883	Sportster R	05 - 13	807 H.HS*	808 H.LS
XLH	883		70 - 83	537 H.HF	
XLH	883	Sportster	85 - 86	579 H.HF	549 H.HF
XLH	883	Sportster	87 - 99	579 H.HF	669 H.HF
XLH	883	Sportster	00 - 03	826 H.HS	826 H.LS
XLH	883	Sportster Hugger	00 - 03	826 H.HS	826 H.LS

* = 2 sets required / 2 jeux pour l'Avant.
Full compound selection, see under "Brake pad 1:1 Drawings" / Sélection complète de composés, voir "1:1 Schémas Plaquettes de frein".



RECOMMENDED
1xx - 2xx = Scooter Pads
5xx - 9xx = Street, Off Road & Racing Pads
2xxx = Brake Shoes



HARLEY DAVIDSON

	975	Bronx	20 - 21	900 H.HS*	675 H.LS
XL	1000		78 - 78	537 H.HF	543 H.HF
XLCH	1000		73 - 73	513 H.HF	
XLCH	1000		78 - 80	537 H.HF	543 H.HF
XLH	1000	Sportster	79 - 82	537 H.HF*	543 H.HF
XLH	1000	Sportster	83 - 85	537 H.HF*	549 H.HF
XLS	1000	Anniversary	82 - 82	537 H.HF*	549 H.HF
XLS	1000	Roadster	79 - 82	537 H.HF*	543 H.HF
XLS	1000	Sportster	83 - 83	537 H.HF*	549 H.HF
XLX	1000	61	83 - 84	537 H.HF	549 H.HF
XR	1000		85 - 85	537 H.HF*	549 H.HF
XLH	1100		87 - 88	579 H.HS	669 H.LS
XLH	1100	Sportster	85 - 86	579 H.HF	549 H.HF
XLX	1100		86 - 86	579 H.HF	549 H.HF
VRSCA	1130	V-Rod	02 - 05	826 H.HS*	826 H.LS
VRSCA	1130	V-Rod	06 - 10	830 H.HS*	830 H.LS
VRSCB	1130	V-Rod	04 - 04	826 H.HS*	826 H.LS
VRSCD	1130	Night Rod	06 - 08	830 H.HS*	830 H.LS
VRSCR	1130	Street Rod	06 - 07	830 H.HS*	830 H.LS
FL	1200	FLH Police	75 - 79	513 H.HF	513 H.HF
FLH	1200		74 - 76	513 H.HF	513 H.HF
FLH	1200		80 - 80	513 H.HF	553 H.HF
FLH	1200	Anniversary	78 - 78	513 H.HF	513 H.HF
FLH	1200	Touring	77 - 78	513 H.HF	513 H.HF
FLHS	1200		77 - 80	513 H.HF	513 H.HF
FX	1200		74 - 80	537 H.HF	513 H.HF
FXE	1200		74 - 80	537 H.HF	513 H.HF
FXS	1200		78 - 79	537 H.HF	513 H.HF
XL	1200	C Sportster Custom	04 - 13	807 H.HS	808 H.LS
XL	1200	C, CA, CB, CP Custom	14 - 19	934 H.HS	715 H.LS
XL	1200	CX	17 - 17	934 H.HS*	715 H.LS
XL	1200	Iron	18 - 20	934 H.HS*	715 H.LS
XL	1200	L Sportster Low	07 - 10	807 H.HS	808 H.LS
XL	1200	N Nightster	07 - 12	807 H.HS	808 H.LS
XL	1200	R Sportster Roadster	04 - 09	807 H.HS*	808 H.LS
XL	1200	Roadster	18 - 20	934 H.HS*	715 H.LS
XL	1200	Sportster Custom	00 - 03	826 H.HS	826 H.LS
XL	1200	Sportster Sport	00 - 03	826 H.HS*	826 H.LS
XL	1200	T Super Low	15 - 17	934 H.HS	715 H.LS
XL	1200	V Seventy-Two	11 - 13	807 H.HS	808 H.LS
XL	1200	V Seventy-Two	14 - 16	934 H.HS	715 H.LS
XL	1200	X Forty-Eight	11 - 13	807 H.HS	808 H.LS
XL	1200	X Forty-Eight	14 - 18	934 H.HS	715 H.LS
XL	1200	X Forty-Eight Spec.	19 - 20	934 H.HS	715 H.LS
XLH	1200	Sportster	90 - 99	579 H.HS	669 H.LS
XLH	1200	Sportster	00 - 03	826 H.HS	826 H.LS
XR	1200		08 - 10	860 H.HS*	808 H.LS
XR	1200	X	10 - 13	860 H.HS*	808 H.LS
	1250	Pan America	20 - 21	900 H.HS*	675 H.LS
VRSCAW	1250	V-Rod	08 - 10	830 H.HS*	830 H.LS
VRSCDX	1250	Night Rod Special	08 - 17	830 H.HS*	830 H.LS
VRSCF	1250	Muscle	09 - 17	830 H.HS	830 H.LS
VRSCX	1250	V-Rod	08 - 10	830 H.HS*	830 H.LS
FLH	1340	80	78 - 80	513 H.HF	513 H.HF
FLH	1340	80	81 - 81	513 H.HF	553 H.HF
FLH	1340	Classic	82 - 83	543 H.HF*	553 H.HF
FLH	1340	Electra Glide	82 - 83	543 H.HF*	513 H.HF
FLH	1340	Electra Glide Spec.	84 - 84	513 H.HF	553 H.HF
FLH	1340	Heritage	81 - 81	543 H.HF*	553 H.HF
FLHS	1340	Electra Glide Sport	90 - 90	579 H.HS*	668 H.LS
FLHT	1340	Electra Glide	85 - 86	579 H.HF*	549 H.HF
FLHT	1340	Electra Glide Classic	87 - 99	579 H.HS*	669 H.LS
FLHT	1340	Tour Glide	84 - 84	537 H.HF*	553 H.HF
FLHTC	1340	Electra Glide Classic	85 - 86	579 H.HF*	549 H.HF
FLHTC	1340	Electra Glide Classic	90 - 99	579 H.HS*	668 H.LS
FLHTC	1340	Electra Glide Classic	93 - 93	579 H.HS*	669 H.LS
FLHTC	1340	Ultra Classic	90 - 99	579 H.HS*	668 H.LS



RECOMMENDED
1xx - 2xx = Scooter Pads
5xx - 9xx = Street, Off Road & Racing Pads
2xxx = Brake Shoes



HARLEY DAVIDSON

FLST	1340	Heritage Softail	86 - 87	579 H.HF	549 H.HF
FLST	1340	Heritage Softail	88 - 99	579 H.HS	668 H.LS
FLSTC	1340	Heritage Softail Cl.	90 - 99	579 H.HS	669 H.LS
FLSTF	1340	Fat Boy	90 - 99	579 H.HS	669 H.LS
FLSTN	1340	Heritage Softail Nost.	93 - 99	579 H.HS*	669 H.LS
FLT	1340		84 - 85	579 H.HF	553 H.HF
FLT	1340	80	80 - 81	543 H.HF*	553 H.HF
FLT	1340	80 Classic	81 - 81	543 H.HF*	553 H.HF
FLT	1340	Classic	82 - 83	543 H.HF*	553 H.HF
FLT	1340	Tour Glide	82 - 82	543 H.HF*	553 H.HF
FLT/H	1340	Series	86 - 87	579 H.HS*	668 H.LS
FLTC	1340	Tour Glide Classic	85 - 86	579 H.HF	549 H.HF
FLTC	1340	Tour Glide Classic	90 - 90	579 H.HS*	668 H.LS
FXB	1340	80	80 - 81	537 H.HF	513 H.HF
FXB	1340	Sturgis	82 - 82	537 H.HF*	513 H.HF
FXDB	1340	Dyna Glide Daytona	91 - 99	579 H.HS*	669 H.LS
FXDB	1340	Dyna Glide Sturgis	91 - 99	579 H.HF	669 H.HF
FXDB	1340	Sturgis	91 - 99	579 H.HS	669 H.LS
FXDL	1340	Dyna Low Rider	93 - 99	579 H.HS*	669 H.LS
FXDWG	1340	Dyna Wide Glide	93 - 99	579 H.HS	669 H.LS
FXE	1340		82 - 82	537 H.HF	669 H.HF
FXE	1340		85 - 86	579 H.HF	549 H.HF
FXE	1340	80	78 - 81	537 H.HF	513 H.HF
FXE	1340	Super Glide	83 - 84	537 H.HF*	513 H.HF
FXEF	1340	80 Fat Bob	79 - 81	537 H.HF	513 H.HF
FXLR	1340	Low Rider Custom	87 - 99	579 H.HS	669 H.LS
FXR	1340		78 - 81	537 H.HF	513 H.HF
FXR	1340		87 - 88	579 H.HS	669 H.LS
FXR	1340	Super Glide	82 - 83	537 H.HF	549 H.HF
FXR	1340	Super Glide	85 - 86	579 H.HF	549 H.HF
FXR	1340	Super Glide	90 - 99	579 H.HS	669 H.LS
FXRD	1340	Sport Glide GTE	85 - 86	579 H.HF*	549 H.HF
FXRS	1340	Low Glide	82 - 84	537 H.HF*	549 H.HF
FXRS	1340	Low Rider	85 - 86	579 H.HF*	549 H.HF
FXRS	1340	Low Rider Sport	87 - 99	579 H.HS*	669 H.LS
FXRS	1340	Low Rider Sport Ed.	90 - 99	579 H.HS*	669 H.LS
FXRS	1340	Low Rider, Convert.	90 - 99	579 H.HS*	669 H.LS
FXRS	1340	Super Glide II	82 - 83	537 H.HF*	549 H.HF
FXRT	1340	Sport Glide	85 - 86	579 H.HF*	549 H.HF
FXRT	1340	Sport Glide	90 - 99	579 H.HS*	669 H.LS
FXRT	1340	Super Glide II	83 - 83	537 H.HF	549 H.HF
FXS	1340	80	79 - 81	537 H.HF	513 H.HF
FXS	1340	Low Rider	82 - 82	537 H.HF*	513 H.HF
FXSB	1340	Low Rider	83 - 83	537 H.HF*	549 H.HF
FXST	1340	Softail	84 - 86	579 H.HF	549 H.HF
FXSTC	1340	Softail Custom	85 - 86	579 H.HF	549 H.HF
FXSTC	1340	Softail Custom	88 - 99	579 H.HS	669 H.LS
FXSTS	1340	Springer Softail	90 - 99	579 H.HS	669 H.LS
FXWG	1340		87 - 88	579 H.HS	669 H.LS
FXWG	1340	80	80 - 81	537 H.HF	513 H.HF
FXWG	1340	Wide Glide	82 - 82	537 H.HF*	513 H.HF
FXWG	1340	Wide Glide	83 - 84	537 H.HF	549 H.HF
FXWG	1340	Wide Glide	85 - 86	579 H.HF	549 H.HF
FLHR/I	1450	Road King	00 - 06	826 H.HS*	826 H.LS
FLHRCI	1450	Road King Classic	00 - 06	826 H.HS*	826 H.LS
FLHRS/I	1450	Road King Custom	04 - 06	826 H.HS*	826 H.LS
FLHT/I	1450	Electra Glide Standard	00 - 06	826 H.HS*	826 H.LS
FLHTC/I	1450	Electra Glide Classic	00 - 06	826 H.HS*	826 H.LS
FLHTCUI	1450	Ultra Classic Electra Glide	00 - 06	826 H.HS*	826 H.LS
FLHXI	1450	Street Glide	06 - 06	826 H.HS*	826 H.LS
FLSTC	1450	Softail	06 - 07	826 H.HS	826 H.LS
FLSTC/I	1450	Heritage Softail Classic	00 - 04	826 H.HS	826 H.LS
FLSTCI	1450	Softail	06 - 06	826 H.HS	826 H.LS
FLSTF	1450	Fat Boy	06 - 07	826 H.HS	826 H.LS
FLSTF/I	1450	Fat Boy	00 - 04	826 H.HS	826 H.LS
FLSTFI	1450	Fat Boy	06 - 06	826 H.HS	826 H.LS
FLSTI	1450	Heritage Softail	06 - 06	826 H.HS	846 H.LS

* = 2 sets required / 2 jeux pour l'Avant.
Full compound selection, see under "Brake pad 1:1 Drawings" / Sélection complète de composés, voir "1:1 Schémas Plaquettes de frein".



RECOMMENDED
1xx - 2xx = Scooter Pads
5xx - 9xx = Street, Off Road & Racing Pads
2xxx = Brake Shoes



HARLEY DAVIDSON					
FLSTN/I	1450	Softail Deluxe	06 - 06	826 H.HS	826 H.LS
FLSTS/I	1450	Heritage Springer	00 - 03	579 H.HS	826 H.LS
FLSTSC/I	1450	Springer Softail Classic	06 - 06	579 H.HS	826 H.LS
FLTR/I	1450	Road Glide Classic	00 - 06	826 H.HS*	826 H.LS
FXD	1450	Dyna Super Glide	00 - 03	826 H.HS	826 H.LS
FXDBI	1450	Dyna Street Bob	06 - 06	826 H.HS	826 H.LS
FXDC/I	1450	Dyna Super Glide			
		Custom	05 - 06	826 H.HS	826 H.LS
FXDI	1450	35th Anniversary			
		Super Glide	06 - 06	826 H.HS	846 H.LS
FXDI	1450	Dyna Super Glide	04 - 07	826 H.HS	826 H.LS
FXDL	1450	Dyna Low Rider	00 - 03	826 H.HS*	826 H.LS
FXDLI	1450	Dyna Low Rider	04 - 06	826 H.HS	826 H.LS
FXDS	1450	Dyna Convertible	00 - 02	826 H.HS*	826 H.LS
FXDWG	1450	Dyna Wide Glide	00 - 03	826 H.HS	826 H.LS
FXDWGI	1450	Dyna Wide Glide	04 - 06	826 H.HS	826 H.LS
FXDX	1450	Dyna Super Glide Sport	00 - 03	826 H.HS*	826 H.LS
FXDXI	1450	Dyna Super Glide Sport	04 - 06	826 H.HS	826 H.LS
FXDXT	1450	Dyna Super Glide			
		T-Sport	00 - 03	826 H.HS*	826 H.LS
FXST/I	1450	Softail Standard	00 - 05	826 H.HS	826 H.LS
FXST/I	1450	Softail Standard	06 - 06	826 H.HS	846 H.LS
FXSTB/I	1450	Night Train	00 - 05	826 H.HS	826 H.LS
FXSTB/I	1450	Night Train	06 - 06	826 H.HS	846 H.LS
FXSTD/I	1450	Softail Deuce	00 - 05	826 H.HS	826 H.LS
FXSTD/I	1450	Softail Deuce	06 - 06	826 H.HS	846 H.LS
FXSTS/I	1450	Softail	05 - 05	579 H.HS	826 H.LS
FXSTS/I	1450	Softail	06 - 06	579 H.HS	846 H.LS
FXSTS/I	1450	Springer Softail	00 - 04	579 H.HS	826 H.LS
FLHR	1584	Road King	07 - 07	826 H.HS*	826 H.LS
FLHR	1584	Road King	08 - 10	830 H.HS*	830 H.LS
FLHRC	1584	Road King Classic	07 - 07	826 H.HS*	826 H.LS
FLHRC	1584	Road King Classic	08 - 10	830 H.HS*	830 H.LS
FLHRS	1584	Road King Custom	07 - 07	826 H.HS*	826 H.LS
FLHT	1584	Electra Glide Standard	07 - 07	826 H.HS*	826 H.LS
FLHT	1584	Electra Glide Standard	08 - 10	830 H.HS*	830 H.LS
FLHTC	1584	Electra Glide Classic	07 - 07	826 H.HS*	826 H.LS
FLHTC	1584	Electra Glide Classic	08 - 10	830 H.HS*	830 H.LS
FLHTCi	1584	Ultra Electra Glide			
		Classic	08 - 10	830 H.HS*	830 H.LS
FLHTCU	1584	Ultra Classic Electra			
		Glide	07 - 08	826 H.HS*	826 H.LS
FLHTCU	1584	Ultra Classic Electra			
		Glide	09 - 10	830 H.HS*	830 H.LS
FLHTK	1584	Electra Glide Ultra LTD	10 - 10	830 H.HS*	830 H.LS
FLHX	1584	Street Glide	07 - 07	826 H.HS*	826 H.LS
FLHX	1584	Street Glide	08 - 10	830 H.HS*	830 H.LS
FLSTC	1584	Heritage Softail Classic	07 - 07	826 H.HS	846 H.LS
FLSTC	1584	Heritage Softail Classic	08 - 11	853 H.HS	854 H.LS
FLSTF	1584	Fat Boy	07 - 07	826 H.HS	846 H.LS
FLSTF	1584	Fat Boy	08 - 11	853 H.HS	854 H.LS
FLSTFB	1584	Fat Boy Special	10 - 11	853 H.HS	854 H.LS
FLSTN	1584	Softail Deluxe	07 - 07	826 H.HS	846 H.LS
FLSTN	1584	Softail Deluxe	08 - 11	853 H.HS	854 H.LS
FLSTSC/I	1584	Softail	07 - 07	579 H.HS	846 H.LS
FLTR	1584	Road Glide	08 - 10	830 H.HS*	830 H.LS
FLTRU	1584	Road Glide Ultra	11 - 16	830 H.HS*	830 H.LS
FLTRX	1584	Road Glide Custom	10 - 10	830 H.HS*	830 H.LS
FXCW	1584	Rocker	08 - 09	853 H.HS	854 H.LS
FXCWC	1584	Rocker C	08 - 13	853 H.HS	854 H.LS
FXD	1584	Dyna Super Glide	07 - 07	826 H.HS	826 H.LS
FXD	1584	Dyna Super Glide	08 - 10	853 H.HS	854 H.LS
FXDB	1584	Dyna Street Bob	07 - 07	826 H.HS	826 H.LS
FXDB	1584	Dyna Street Bob	08 - 13	853 H.HS	854 H.LS
FXDC	1584	Dyna Super Glide			
		Custom	07 - 07	826 H.HS	826 H.LS
FXDC	1584	Dyna Super Glide			
		Custom	08 - 13	853 H.HS	854 H.LS



RECOMMENDED
1xx - 2xx = Scooter Pads
5xx - 9xx = Street, Off Road & Racing Pads
2xxx = Brake Shoes



HARLEY DAVIDSON					
FXDF	1584	Fat Bob	08 - 11	853 H.HS	854 H.LS
FLSTS/I	1450	Heritage Springer	00 - 03	579 H.HS	826 H.LS
FXDL	1584	Dyna Low Rider	07 - 07	826 H.HS	826 H.LS
FXDL	1584	Dyna Low Rider	08 - 13	853 H.HS	854 H.LS
FXDWG	1584	Dyna Wide Glide	07 - 07	826 H.HS	826 H.LS
FXDWG	1584	Dyna Wide Glide	08 - 10	853 H.HS	854 H.LS
FXST	1584	Softail Standard	07 - 07	826 H.HS	846 H.LS
FXST	1584	Softail Standard	08 - 14	853 H.HS	854 H.LS
FXST	1584	Softail Standard	15 - 17	860 H.HS	854 H.LS
FXSTB	1584	Night Train	07 - 07	826 H.HS	846 H.LS
FXSTB	1584	Night Train	08 - 09	853 H.HS	854 H.LS
FXSTC	1584	Softail Custom	07 - 07	826 H.HS	846 H.LS
FXSTC	1584	Softail Custom	08 - 10	853 H.HS	854 H.LS
FXSTD	1584	Softail Deuce	07 - 07	826 H.HS	846 H.LS
FLD	1690	Switchback	12 - 16	853 H.HS	854 H.LS
FLHR	1690	Road King	11 - 16	830 H.HS*	830 H.LS
FLHRC	1690	Road King Classic	11 - 16	830 H.HS	830 H.LS
FLHTC	1690	Electra Glide Classic	11 - 16	853 H.HS	854 H.LS
FLHTCU	1690	Ultra Classic Electra			
		Glide	11 - 16	830 H.HS*	830 H.LS
FLHTCUL	1690	Electra Glide Ultra			
		Classic Low	15 - 16	830 H.HS*	830 H.LS
FLHTCUTG	1690	Tri Glide Ultra	14 - 16	922 H.HS*	923 H.LS
FLHTCUTG	1690	Tri Glide Ultra			
		Classic Trike	09 - 13	830 H.HS*	904 H.LS
FLHTK	1690	Ultra Classic			
		Electra Glide	10 - 16	830 H.HS*	830 H.LS
FLHTK	1690	Ultra Electra Glide	11 - 16	853 H.HS	854 H.LS
FLHTKL	1690	Ultra Limited Low	15 - 16	830 H.HS*	830 H.LS
FLHX	1690	Street Glide	11 - 16	830 H.HS*	830 H.LS
FLHXS	1690	Street Glide Special	14 - 16	830 H.HS*	830 H.LS
FLHXXX	1690	Street Glide Trike	10 - 11	830 H.HS*	904 H.LS
FLRT	1690	Freewheeler	15 - 16	922 H.HS*	923 H.LS
FLS	1690	Softail Slim	12 - 14	853 H.HS	854 H.LS
FLS	1690	Softail Slim	15 - 17	860 H.HS	854 H.LS
FLSTC	1690	Heritage Softail			
		Classic	12 - 14	853 H.HS	854 H.LS
FLSTC	1690	Heritage Softail			
		Classic	15 - 17	860 H.HS	854 H.LS
FLSTF	1690	Fat Boy	12 - 14	853 H.HS	854 H.LS
FLSTF	1690	Fat Boy	15 - 17	860 H.HS	854 H.LS
FLSTF	1690	Fat Boy Special	12 - 14	853 H.HS	854 H.LS
FLSTFB	1690	Fat Boy	12 - 14	853 H.HS	854 H.LS
FLSTFB	1690	Fat Boy	15 - 17	860 H.HS	854 H.LS
FLSTN	1690	Softail Deluxe	12 - 14	853 H.HS	854 H.LS
FLSTN	1690	Softail Deluxe	15 - 17	860 H.HS	854 H.LS
FLTRX	1690	Road Glide	15 - 16	830 H.HS*	830 H.LS
FLTRXS	1690	Road Glide Special	15 - 16	830 H.HS*	830 H.LS
FXDB	1690	Dyna Street Bob	14 - 17	853 H.HS	854 H.LS
FXDBA	1690	Dyna Street Bob	13 - 17	853 H.HS	854 H.LS
FXDBB	1690	Dyna Street Bob	14 - 17	853 H.HS	854 H.LS
FXDBP	1690	Dyna Street Bob	13 - 17	853 H.HS	854 H.LS
FXDC	1690	Dyna Super Glide			
		Custom	14 - 14	853 H.HS	854 H.LS
FXDF	1690	Dyna Wide Glide	12 - 17	853 H.HS	854 H.LS
FXDF	1690	Fat Bob	12 - 17	853 H.HS*	854 H.LS
FXDL	1690	Dyna Low Rider	14 - 17	853 H.HS*	854 H.LS
FXDLS	1690	Dyna Low Rider S	17 - 17	853 H.HS*	854 H.LS
FXS	1690	Blackline	13 - 17	853 H.HS	854 H.LS
FXSB	1690	Breakout	14 - 14	853 H.HS	854 H.LS
FXSB	1690	Breakout	15 - 17	860 H.HS	854 H.LS
FLDE	1750	Softail Deluxe	18 - 19	860 H.HS	949 H.LS
FLFB	1750	Fat Boy	18 - 20	860 H.HS	949 H.LS
FLHC	1750	Heritage Classic	18 - 19	860 H.HS	949 H.LS
FLHR	1750	Road King	17 - 20	830 H.HS*	830 H.LS
FLHRC	1750	Road King Classic	17 - 17	830 H.HS*	830 H.LS
FLHRXS	1750	Road King Special	18 - 20	830 H.HS	949 H.LS

* = 2 sets required / 2 jeux pour l'Avant.
Full compound selection, see under "Brake pad 1:1 Drawings" / Sélection complète de composés, voir "1:1 Schémas Plaquettes de frein".



RECOMMENDED
1xx - 2xx = Scooter Pads
5xx - 9xx = Street, Off Road & Racing Pads
2xxx = Brake Shoes



HARLEY DAVIDSON					
FLHTCU	1750	Ultra Classic Electra Glide	17 - 19	830 H.HS*	830 H.LS
FLSTS/I	1450	Heritage Springer	00 - 03	579 H.HS	826 H.LS
FLHTCUTG	1750	Tri Glide Ultra	17 - 19	922 H.HS*	923 H.LS
FLHTK	1750	Ultra Limited	17 - 19	830 H.HS*	830 H.LS
FLHTKL	1750	Ultra Limited Low	17 - 19	830 H.HS*	830 H.LS
FLHX	1750	Street Glide	17 - 19	830 H.HS*	830 H.LS
FLHX	1750	Street Glide Special	17 - 19	830 H.HS*	830 H.LS
FLHXS	1750	Street Glide Special	17 - 19	830 H.HS*	830 H.LS
FLRT	1750	Freewheeler	17 - 19	922 H.HS*	923 H.LS
FLSB	1750	Sport Glide	18 - 20	860 H.HS*	949 H.LS
FLSL	1750	Softail Slim	18 - 20	860 H.HS	949 H.LS
FLTRU	1750	Road Glide Ultra	17 - 19	830 H.HS*	830 H.LS
FLTRX	1750	Road Glide	17 - 19	830 H.HS*	830 H.LS
FLTRXS	1750	Road Glide Special	17 - 20	830 H.HS*	830 H.LS
FXBB	1750	Street Bob	18 - 20	860 H.HS	949 H.LS
FXBR	1750	Breakout	18 - 19	860 H.HS	949 H.LS
FXFB	1750	Fat Bob	18 - 20	860 H.HS	949 H.LS
FXLR	1750	Low Rider	18 - 20	860 H.HS	949 H.LS
FLHRSE5	1802	CVO Road King	14 - 15	830 H.HS*	830 H.LS
FLHTKSE	1802	CVO Limited	14 - 16	830 H.HS*	830 H.LS
FLHXSE	1802	CVO Street Glide	10 - 16	830 H.HS*	830 H.LS
FLSS	1802	Softail Slim S	16 - 17	860 H.HS	854 H.LS
FLSTFBS	1802	Fat Boy S	16 - 17	860 H.HS	854 H.LS
FLSTNSE	1802	CVO Softail Deluxe	14 - 14	853 H.HS*	854 H.LS
FLSTNSE	1802	CVO Softail Deluxe	15 - 17	860 H.HS*	854 H.LS
FLTRUSE	1802	CVO Road Glide Ultra	11 - 16	830 H.HS	830 H.LS
FXSBSE	1802	CVO Breakout	13 - 14	853 H.HS	854 H.LS
FLFBS	1870	Fat Boy	18 - 19	860 H.HS	949 H.LS
FLHCS	1870	Heritage Classic	18 - 19	860 H.HS	949 H.LS
FLHTKSE	1870	CVO Limited	17 - 17	830 H.HS*	830 H.LS
FLHXSE	1870	CVO Street Glide	17 - 17	830 H.HS*	830 H.LS
FXBRS	1870	Breakout	18 - 20	860 H.HS	949 H.LS
FXDR	1870		19 - 20	860 H.HS	949 H.LS
FLHTKSE	1917	CVO Limited	18 - 19	830 H.HS*	830 H.LS
FLHXSE	1917	CVO Street Glide	18 - 19	830 H.HS*	830 H.LS
FLTRXSE	1917	CVO Road Glide	18 - 19	830 H.HS*	830 H.LS
HIGHLAND					
	450	MX	06 - 09	671 RSI	675 RSI
	950	V2 Motard	00 - 08	671 HF	675 HF
	950	V2 Outback	99 - 08	671 HF	675 HF
HISUN					
HS	400	UTV Left	15 - 17	638 SI	767 SI
HS	400	UTV Right	15 - 17	611 SI	
HS	500	UTV Left	15 - 17	638 SI	767 SI
HS	500	UTV Right	15 - 17	611 SI	
HS	700	UTV Left	15 - 17	638 SI	767 SI
HS	700	UTV Right	15 - 17	611 SI	
HS	700	UTV Left (2 cal.rear)			
		Left	15 - 17	638 SI	638 SI
HS	700	UTV Left (2 cal.rear)			
		Right	15 - 17	611 SI	611 SI
HS	800	UTV (2 cal.rear) Left	15 - 17	638 SI	638 SI
HS	800	UTV (2 cal.rear) Right	15 - 17	611 SI	611 SI
HONDA					
	50	Formula	94 - 98	123 HF	
CB	50	all models	80 - 81	100 HF	2013
CB	50	all models	81 - 81	2013	2013
CH	50	P Metropolitan II	02 - 06	2057	2057
CHF	50	Metropolitan	02 - 05	2057	2057
CR	50	RE, RF	84 - 85	2057	2057
CRF	50	F	04 - 21	2010	2010
MB	50	S	80 - 82	100 HF	2013
MBX	50		80 - 82	100 HF	2013
MT	50	S	80 - 93	2013	2013



RECOMMENDED
1xx - 2xx = Scooter Pads
5xx - 9xx = Street, Off Road & Racing Pads
2xxx = Brake Shoes



HONDA					
NA	50	Express	79 - 81	2010	2011
NB	50	ME, Aero	83 - 87	2010	2011
NC	50	Express	77 - 80	2010	2010
NC	50	Express	81 - 83	2010	2011
NH	50	Lead	83 - 83	2012	2011
NH	50	Lead	86 - 93	110 HF	2011
NH	50	Lead	94 - 94	121 HF	2011
NH	50	Lead (Drum vers.)	94 - 94	2012	2011
NH	50	Lead SS,MR,MSE	84 - 85	112 HF	2011
NN	50	MD Gyro	84 - 84	2010	2010
NPS	50	Zoomer	01 - 12	2057	2057
NQ	50	D, Spree	84 - 87	2010	2010
NS-1	50		91 - 94	103 HF	2011
NSC	50	Vision	10 - 18	205 HF	
NSR	50		89 - 90	103 HF	2013
PA	50		78 - 81	2010	2074
PA	50		82 - 83	2010	2010
PK	50	Walaroo DX-STD	90 - 01	2057	2012
PX	50		82 - 83	2074	2011
PX	50		84 - 84	2074	
QA	50	K1-K3	87 - 89	2074	2074
QR	50		93 - 03	2010	2057
QR	50	ED, EF	82 - 92	2010	2011
R	50	Monkey	88 - 88	618 HF	2012
SA	50	Elite LX, SR	88 - 93	2010	2011
SA	50	J Vision	88 - 94	2057	2057
SB	50		88 - 89	2010	2010
TG	50	M Gyro S	85 - 86	2010	2010
XR	50	R	00 - 03	2010	2010
Z	50	R, RD	80 - 99	2010	2010
CR	60	RF, RG	85 - 86	2057	2057
ATC	70	all models	78 - 85		2069
ATC	70	K1	76 - 77		2012
C	70	all models	75 - 83	2012	2012
CRF	70	F	04 - 14	2057	2057
CT	70		91 - 94	2010	2010
TRX	70		86 - 87	2048*	2041
XR	70		97 - 12	2057	2057
NS-1	75		92 - 00	119 HF	121 HF
ATC	80		76 - 78		2019
CB	80		80 - 81	100 HF	
CH	80	Elite	85 - 88	2012	2057
CR	80	R	86 - 91	584 SI	2043
CR	80	R, RB	92 - 02	584 RSI	604 RSI
CR	80	R2	85 - 85	2013	2013
CR	80	RA, RB	80 - 81	2013	2013
CR	80	RC	82 - 82	2013	2057
CR	80	RD, RE	83 - 84	2057	2057
CR	80	RF	85 - 85	2057	2043
CRF	80	F	04 - 14	2057	2057
NH	80	Aero	85 - 85	2012	2057
NH	80	MD Lead, Aero	83 - 84	2012	2011
NSR	80	R	87 - 92	103 HF	121 HF
NSR	80	R	93 - 95	119 HF	121 HF
XR	80		79 - 84	2013	2013
XR	80	R	85 - 88	2057	2057
CR	85	R, R Expert	03 - 12	592 RSI	604 RSI
ATC	90	K1, K2, K3	73 - 78		2019
C	90		93 - 02	2013	2013
EZ	90	Cub	90 - 95	2012	2012
NH	90	Yupy	90 - 94	121 HF	2013
TRX	90		93 - 01	2012*	2019
	100	Lead	00 - 08	104 HF	
CRF	100	F	04 - 14	2057	2057
NSF	100		06 - 06	688 DC	604 HF
XL	100	all models	78 - 85	2013	2013
XR	100		81 - 84	2013	2013
XR	100	R	85 - 03	2057	2057

* = 2 sets required / 2 jeux pour l'Avant.
Full compound selection, see under "Brake pad 1:1 Drawings" / Sélection complète de composés, voir "1:1 Schémas Plaquettes de frein".



RECOMMENDED
1xx - 2xx = Scooter Pads
5xx - 9xx = Street, Off Road & Racing Pads
2xxx = Brake Shoes



HONDA					
AFS	110	Wave	12 - 19	216 HF	
ATC	110	all models	79 - 85		2019
CRF	110	F	13 - 21	2057	2057
NHX	110		08 - 09	125 HF	
NHX	110		10 - 12	104 CT	
NSC	110	Vision	10 - 12	205 HF	
	125	Grom	14 - 21	797 HF	915 HF
	125	Monkey	19 - 21	797 HF	784 HF
ANF	125	i Innova	07 - 11	180 CT	2012
ANF	125	Innova	03 - 06	180 CT	2012
ATC	125	ME, MF, MG, MH	84 - 87	2012	2019
C	125	Super Cub	19 - 21	216 CT	
CB	125	R	18 - 20	940 HS	915 HF
CBR	125	R	03 - 10	797 HF	784 HF
CBR	125	R	11 - 18	797 HF	915 HF
CH	125	D, E, Spacy, Elite	83 - 84	2012	2012
CR	125	M2, M3, M4	76 - 78	2013	2013
CR	125	R	79 - 81	2031	2041
CR	125	R	95 - 01	694 RSI	604 RSI
CR	125	R	02 - 07	694 RSI	777 RSI
CR	125	RC	82 - 82	2041	2041
CR	125	RD	83 - 83	2042	2042
CR	125	RE, RF	84 - 85	558 SI	2042
CR	125	RG	86 - 86	558 SI	2047
CR	125	RH, RJ, RK	87 - 94	603 RSI	604 RSI
CRE	125		02 - 07	694 SI	777 SI
CRE	125	RR	11 - 11	859 SI	777 SI
CRF	125	F	14 - 21	694 SI	2057
MSX	125		14 - 21	797 HF	915 HF
MT	125	R	77 - 77	525 HF	2013
MT	125	R	78 - 78	517 HF	2013
NES	125	@	01 - 06	104 CT	2208
NH	125	Lead Scooter	86 - 87	112 CT	2012
NSS	125	Forza	15 - 19	183 CT	193 CT
PCX	125		09 - 17	205 MS	2208
PCX	125		18 - 20	228 CT	2208
PCX	125	(Nissin cal.)	18 - 20	233 CT	2208
PS	125	i	07 - 13	125 CT	2208
RS	125		95 - 03	566 DC	618 RQ
RS	125	R	91 - 94	627 HF*	618 HF
SES	125	Dylan	02 - 07	125 CT	2208
SH	125		02 - 08	125 CT	2208
SH	125		13 - 20	183 CT	193 HF
SH	125	i	09 - 12	192 HF	193 HF
TRX	125		85 - 88	2012*	2019
XL	125	K2	78 - 78	2013	2013
XL	125	K3	79 - 79	2012	2013
XL	125	S	79 - 84	2013	2013
XLR	125	R	98 - 01	694 HF	2013
XR	125	L	03 - 07	694 HF	2013
CBR	150	R	00 - 10	797 HF	784 HF
CH	150	D Elite	85 - 87	2012	2012
CRF	150	F	03 - 06	694 SI	2013
CRF	150	R	07 - 21	592 RSI	777 RSI
NES	150	@	01 - 06	104 CT	2208
NS	150		92 - 95	121 HF	
NSR	150		02 - 02	688 HF	611 HF
PCX	150		12 - 17	205 MS	2208
PCX	150		18 - 20	233 CT	2208
PS	150	i	07 - 11	125 CT	2208
SES	150	Dylan	02 - 06	125 CT	2208
SH	150		02 - 08	125 CT	2208
SH	150		13 - 18	183 CT	193 HF
SH	150	i	09 - 12	192 HF	193 HF
CB	175	K3-K7	74 - 76		2068
CD	175	all models	71 - 78	2019	
ATC	185	A, S, SB	80 - 83	2012	2019
CM	185	T	78 - 79	2023	2069



RECOMMENDED
1xx - 2xx = Scooter Pads
5xx - 9xx = Street, Off Road & Racing Pads
2xxx = Brake Shoes



HONDA					
XL	185	S	79 - 83	2013	2013
ATC	200		81 - 83	2012	2019
ATC	200	E Big Red	82 - 83	2012	2019
ATC	200	ES Big Red	84 - 84	2012	2019
ATC	200	M	84 - 85	2012	2019
ATC	200	S	84 - 86	2012	2019
ATC	200	X	83 - 85	592 SI	562 SI
ATC	200	X	86 - 87	592 SI	592 SI
CM	200	TA, TB	80 - 82	2023	2069
CTX	200		04 - 06	694 SI	2013
TLR	200	Fatcat	86 - 87	2013	2013
TLR	200	G, H	86 - 87	2013	2057
TR	200		86 - 87	2013	2013
TRX	200		84 - 84	2044*	2019
TRX	200		90 - 91	2083*	2019
TRX	200	D Type II	91 - 97	2083*	2019
TRX	200	SX	86 - 88	2083*	2019
XL	200	R	83 - 84	2013	2013
XR	200		80 - 84	2013	2013
XR	200	R	84 - 02	2013	2013
XR	200	R, Pro Link	81 - 83	2013	2013
CRF	230		04 - 09	694 SI	2013
CRF	230	L	08 - 10	694 SI	604 SI
CRF	230	M	09 - 12	694 SI	604 SI
SL	230		97 - 01	694 HF	604 HF
	250	Cota 4RT	04 - 16	802 RSI	803 RSI
ATC	250	ES, SX	85 - 87	2019	2024
ATC	250	R	81 - 81	536 SI	2014
ATC	250	R	82 - 84	584 SI	562 SI
ATC	250	R	85 - 86	558 SI	558 SI
ATC	250	X	85 - 85	558 SI	562 SI
CA	250	Rebel	90 - 95	638 HF	2058
CB	250	Nighthawk	91 - 02	2023	2069
CBF	250		04 - 08	688 HF	
CBR	250	R (Bybre cal)	11 - 11	674 HS	675 LS
CBR	250	R (Nissin cal)	11 - 13	627 HS	881 LS
CBR	250	R ABS (Nissin cal)	11 - 13	828 HS	881 LS
CBR	250	RR	17 - 21	700 HS	881 LS
CH	250	Elite	85 - 86	2041	2082
CH	250	Elite	87 - 90	2041	2041
CM	250	C	82 - 83	2023	2069
CMX	250	C Rebel	96 - 00	713 HF	2069
CMX	250	Rebel	85 - 12	551 HF	2069
CN	250		93 - 04	127 CT	2041
CN	250	Helix	86 - 87	160 CT	2189
CR	250	R	81 - 82	2030	2041
CR	250	R	83 - 83		2042
CR	250	R	87 - 94	603 RSI	604 RSI
CR	250	R	95 - 01	694 RSI	604 RSI
CR	250	R	02 - 07	694 RSI	777 RSI
CR	250	RE, RF	84 - 85	558 SI	2042
CR	250	RG	86 - 86	558 SI	2047
CR	250	RZ, RA	79 - 80	2031	2075
CRE	250		02 - 07	694 SI	777 SI
CRF	250	L	13 - 15	859 SI	915 SI
CRF	250	L ABS	17 - 21	859 SI	915 SI
CRF	250	M	14 - 18	859 SI	915 SI
CRF	250	R	04 - 09	694 RSI	777 RSI
CRF	250	R Efi	10 - 21	694 RSI	777 RSI
CRF	250	Rally	17 - 19	859 SI	915 SI
CRF	250	X	04 - 19	694 SI	777 SI
FL	250	Odyssey	77 - 84	525 HF	2019
FL	250	Odyssey	84 - 84	529 HF	2019
MT	250	K1	74 - 76	2023	2023
MTX	250	R	86 - 86	558 SI	
NSS	250	Reflex	01 - 07	156 MS	158 MS
NX	250		88 - 90	603 HF	2029
PS	250		05 - 06	192 MS	

* = 2 sets required / 2 jeux pour l'Avant.
Full compound selection, see under "Brake pad 1:1 Drawings" / Sélection complète de composés, voir "1:1 Schémas Plaquettes de frein".

RECOMMENDED
1xx - 2xx = Scooter Pads
5xx - 9xx = Street, Off Road & Racing Pads
2xxx = Brake Shoes

HONDA					
RS	250	R	91 - 92	622 DC*	614 HF
RS	250	R	93 - 93	566 DC*	618 RQ
TL	250		75 - 76	2013	2013
TRX	250		85 - 87	2044*	2024
TRX	250	EX Sportrax	01 - 08	592 SI*	2055
TRX	250	R	86 - 89	603 SI*	558 SI
TRX	250	R Fourtrax	88 - 88	603 SI*	558 SI
TRX	250	Recon	97 - 14	2083*	2055
TRX	250	X	08 - 13	592 SI*	2055
TRX	250	X Fourtrax	87 - 87	603 SI*	558 SI
TRX	250	X Fourtrax	88 - 92	584 SI*	584 SI
VTR	250		88 - 89	552 HF	2068
VTR	250		90 - 90	593 HS	2068
VTR	250		98 - 02	654 HF	614 HF
XL	250		78 - 79	2070	2023
XL	250	R	82 - 83	2041	2029
XL	250	R	84 - 87	558 HF	2013
XL	250	S	78 - 80	2023	2029
XL	250	S	81 - 81	2023	2026
XR	250		79 - 80	2023	2029
XR	250	L	91 - 92	603 HF	604 HF
XR	250	L	93 - 97	694 HF	604 HF
XR	250	R	81 - 83	2030	2029
XR	250	R	84 - 87	558 SI	2013
XR	250	R	88 - 89	603 SI	2013
XR	250	R	90 - 95	603 SI	604 SI
XR	250	S	96 - 00	694 HF	604 HF
Cota	260	4Ride	16 - 19	939 RSI	803 RSI
Cota	260	4RT	04 - 16	802 RSI	803 RSI
Cota	260	4RT Race Replica	15 - 19	939 RSI	803 RSI
CB	300		10 - 10	688 HF	
CB	300	R	18 - 21	940 HS	915 HF
CB	300	R Neo Sports Cafe	19 - 19	940 HS	915 HF
CBR	300	F	14 - 16	700 HS	881 LS
CBR	300	F ABS	14 - 17	700 HS	881 LS
CBR	300	R	14 - 21	700 HS	881 LS
CMX	300	Rebel	17 - 18	700 HS	881 LS
Cota	300	RR	16 - 19	939 RSI	803 RSI
SH	300	i	07 - 19	192 MS	193 HF
SH	300	i SH30	15 - 18	183 MS	193 MS
TRX	300		88 - 00		2024
TRX	300	4WD	88 - 00	2085*	2024
TRX	300	EX	93 - 00	592 SI*	562 SI
TRX	300	EX Sportrax	01 - 08	592 SI*	592 SI
TRX	300	X	09 - 09	592 SI*	592 SI
ATC	350	Odyssey	85 - 85	558 SI	562 SI
ATC	350	X	85 - 85	558 SI	562 SI
ATC	350	X	86 - 89	603 SI	562 SI
CB	350	F, F1	73 - 76	501 HF	2024
CB	350	K4	74 - 74	2071	2024
FL	350	R Odyssey	85 - 87	2044*	610 HF
TRX	350	all models	86 - 89	2045	2046
TRX	350	Rancher /ES 2x4, 4x4	00 - 09	2085*	2207
XL	350		76 - 78	2070	2023
XL	350	R	84 - 87	558 HF	2029
XR	350	R	83 - 83	2042	2013
XR	350	R	84 - 85	558 SI	2013
CB	360	G, T	73 - 76	501 HF	2024
CB	400		81 - 82	542 HF	542 HF
CB	400	A	77 - 81	526 HF	2058
CB	400	F, F1, F2	75 - 79	501 HF	2024
CB	400	Hawk	81 - 85	542 HF	542 HF
CB	400	N, T, Hawk	78 - 82	526 HF	2058
CB	400	T1, T2	77 - 78	526 HF	2058
CB-1	400	(CB 400 F)	89 - 90	627 HS	614 LS
CM	400	A, T, TZ	79 - 79	526 HF	2058
CM	400	C	81 - 81	572 HF	2058
CM	400	E	80 - 81	2071	2058

RECOMMENDED
1xx - 2xx = Scooter Pads
5xx - 9xx = Street, Off Road & Racing Pads
2xxx = Brake Shoes

HONDA					
CM	400	T	79 - 81	526 HF	2058
CM	400	T	82 - 84	542 HF	2058
FJS	400	Silverwing	06 - 08	156 MS	184 MS
FJS	400	Silverwing (Parking Brake)	06 - 08	209 HF	
FL	400	R Pilot	89 - 90	2044*	610 HF
RVF	400	RR (NC35)	90 - 96	622 HF*	623 HF
SW-T	400		09 - 13	192 MS	184 MS
SW-T	400	ABS	09 - 14	192 MS	184 MS
TRX	400	AT	04 - 11	2085*	2207
TRX	400	EX Sportrax	01 - 08	592 SI*	592 SI
TRX	400	Fourtrax EX	99 - 00	592 SI*	592 SI
TRX	400	FW Fourtrax Foreman	95 - 02	2085*	2207
TRX	400	X	09 - 12	592 SI*	592 SI
XR	400	R	96 - 04	694 SI	604 SI
TRX	420	FA / FPA	09 - 13	592 SI*	813 SI
TRX	420	FPE / FPM 4x4	09 - 14	592 SI*	
XR	440	R	00 - 03	694 SI	604 SI
CB	450	K5, K6, K7	72 - 77	501 HF	2072
CB	450	SC Nighthawk	82 - 82	561 HF	2058
CB	450	SC Nighthawk	83 - 86	572 HF	2058
CM	450	A, C	82 - 86	542 HF	2058
CMX	450	Rebel	86 - 88	542 HF	2058
CR	450	R	81 - 81	2030	
CRE	450	F	02 - 06	694 SI	777 SI
CRF	450	Efi	09 - 12	694 RSI	777 RSI
CRF	450	L	19 - 21	694 RSI	777 RSI
CRF	450	R	02 - 08	694 RSI	777 RSI
CRF	450	R Efi	13 - 21	694 RSI	777 RSI
CRF	450	RX Efi	17 - 21	694 SI	777 SI
CRF	450	X	05 - 21	694 SI	777 SI
TRX	450	EX Sportrax	01 - 05	592 SI*	592 SI
TRX	450	Foreman ES, Foreman S	98 - 04	2085*	2207
TRX	450	R	04 - 09	694 SI*	813 SI
CR	480	R	82 - 82	2030	2041
CR	480	R	83 - 83		2042
	500	Pioneer	15 - 20	982 PSI*	976 PSI
CB	500	F	72 - 75	501 HF	2072
CB	500	F	13 - 21	700 HS	881 LS
CB	500	T	75 - 78	501 HF	2072
CB	500	X	13 - 21	700 HS	881 LS
CBR	500	R	13 - 21	700 HS	881 LS
CMX	500	Rebel	17 - 21	700 HS	881 LS
CMX	500	Rebel S	20 - 20	700 HS	881 LS
CR	500	R	87 - 94	603 RSI	604 RSI
CR	500	R	95 - 01	694 RSI	604 RSI
CR	500	RE, RF	84 - 85	558 SI	2042
CR	500	RG	86 - 86	558 SI	2047
CX	500		78 - 80	517 HF*	2059
CX	500		81 - 81	572 HF*	
CX	500	C	81 - 82	542 HF*	2059
CX	500	Silver W., Turbo	83 - 85	542 HF*	542 HF
CX	500	Turbo	82 - 83	542 HF*	572 HF
CX	500	Z, A, B	79 - 81		2059
FT	500		82 - 84	542 HF*	542 HF
GB	500	T.T.	88 - 92	542 HF	2059
GL	500		82 - 82	572 HF*	542 HF
GL	500	D	81 - 82	542 HF*	2059
GL	500	I	81 - 82	572 HF*	2059
TRX	500	all models	05 - 14	829 SI*	2046
TRX	500	Foreman, Rubicon	00 - 09	2085*	2072
VF	500	F, FII	84 - 86	542 HF*	542 HF
VT	500	C Shadow	83 - 86	542 HF	2058
VT	500	ED	82 - 82	552 HF	2058
XL	500	R	83 - 87	558 HF	2026
XL	500	RC	82 - 82	2077	2026
XL	500	SB	81 - 81	2075	2068

* = 2 sets required / 2 jeux pour l'Avant.
Full compound selection, see under "Brake pad 1:1 Drawings" / Sélection complète de composés, voir "1:1 Schémas Plaquettes de frein".

				RECOMMENDED 1xx - 2xx = Scooter Pads 5xx - 9xx = Street, Off Road & Racing Pads 2xxx = Brake Shoes	
HONDA					
XL	500	SZ	80 - 80	2023	2026
XR	500	R Pro Link	81 - 82	2030	2026
XR	500	R, Pro Link	83 - 84	558 HF	2013
XR	500	SZ, SA	79 - 80	2031	2026
CB	550	F	75 - 79	501 HF	2072
CB	550	K	74 - 78	501 HF	2072
CB	550	SC	83 - 84	542 HF	2058
CBX	550	F, F2	82 - 86	552 HF*	571 HF
CB	599		04 - 04	627 HS*	657 LS
CB	600	Hornet ABS	07 - 12	828 HS*	657 LS
CBR	600	F	11 - 13	627 HS*	834 LS
CBR	600	F ABS	11 - 13	828 HS*	657 LS
CBR	600	F Hurricane	87 - 90	593 HS*	542 LS
CBR	600	F, Super Sport	91 - 94	593 HS*	657 LS
CBR	600	F3	95 - 98	627 HS*	657 LS
CBR	600	F4, F4 Sport	99 - 06	734 HS*	657 LS
CBR	600	RR	03 - 04	734 HS*	657 LS
CBR	600	RR	05 - 06	809 HS*	657 LS
CBR	600	RR	07 - 08	809 HS*	834 LS
CBR	600	RR ABS	09 - 18	809 HS*	834 LS
FSC	600	Silverwing	01 - 08	156 MS	184 MS
FSC	600	Silverwing	09 - 18	192 MS	184 MS
FSC	600	Silverwing			
		(Parking Brake)	01 - 18	209 HF	
SW-T	600		11 - 13	192 MS	184 MS
VT	600	C, Shadow	88 - 93	647 HS	2059
VT	600	C, Shadow	94 - 00	627 HS	2059
VT	600	CD Shadow VLX	94 - 00	627 HS*	2059
XL	600	R	83 - 86	558 HF	2026
XL	600	V, Transalp	87 - 90	542 HS	2026
XR	600	R	83 - 87	558 SI	2013
XR	600	R	88 - 90	603 SI	2013
XR	600	R	91 - 92	603 SI	604 SI
XR	600	R	93 - 00	694 SI	604 SI
CB	650		79 - 81	526 HF	2027
CB	650		85 - 85	542 HF*	
CB	650	C	80 - 85	526 HF	2027
CB	650	F	14 - 19	627 HS*	881 LS
CB	650	R Neo Sports Cafe	19 - 21	940 HS*	881 LS
CB	650	SC Nighthawk	83 - 85	542 HF*	2059
CB	650	SCC Nighthawk	82 - 82	561 HF*	2027
CB	650	Z	78 - 81	526 HF*	2027
CBR	650	F	14 - 20	627 HS*	881 LS
CBR	650	F ABS	14 - 20	700 HS*	881 LS
CBR	650	R	19 - 21	940 HS	881 LS
CX	650	C	83 - 86	542 HF*	2059
CX	650	E	83 - 86	572 HF*	542 HF
CX	650	Turbo	83 - 86	542 HF*	542 HF
FMX	650		05 - 08	627 HS	657 LS
GL	650	D	83 - 84	542 HF*	2059
NT	650	Hawk GT	88 - 91	627 HS	614 LS
NT	650	V Deauville	98 - 00	674 HS*	614 LS
NT	650	V Deauville	01 - 01	674 HS*	657 LS
NT	650	V Deauville	02 - 05	735 HS*	736 LS
NX	650	Dominator J-K	88 - 92	647 HS	614 LS
TRX	650	FA Rincon	03 - 05	2085*	813 SI
TRX	650	FGA Rincon	04 - 05	2085*	813 SI
XR	650	L	93 - 18	694 HF	604 HF
XR	650	R	00 - 11	694 SI	604 SI
DN-01	680		08 - 11	828 HS*	630 LS
DN-01	680	(Parking Brake)	08 - 11	209 HF	
TRX	680	FA6 Rincon	06 - 15	829 SI*	813 SI
TRX	680	FGA6 Rincon	06 - 15	829 SI*	813 SI
	700	Pioneer	14 - 21	982 PSI*	976 PSI
CB	700	SC	84 - 86	542 HF*	2046
CTX	700		14 - 18	700 HS	881 LS
CTX	700	D ABS w/DCT	13 - 15	700 HS	881 LS

				RECOMMENDED 1xx - 2xx = Scooter Pads 5xx - 9xx = Street, Off Road & Racing Pads 2xxx = Brake Shoes	
HONDA					
CTX	700	D ABS w/DCT			
		(Parking Brake)	13 - 15	879 HF	
CTX	700	N	14 - 18	700 HS	881 LS
CTX	700	ND ABS w/DCT	14 - 15	700 HS	881 LS
CTX	700	ND ABS w/DCT			
		(Parking Brake)	14 - 15	879 HF	
NC	700	D Integra	12 - 13	828 HS	657 LS
NC	700	D Integra w/DCT			
		(Parking Brake)	12 - 13	879 HF	
NC	700	S	12 - 13	627 HS	614 LS
NC	700	SA ABS	12 - 13	828 HS	657 LS
NC	700	SD ABS	12 - 13	828 HS	657 LS
NC	700	SD ABS w/DCT			
		(Parking Brake)	12 - 13	879 HF	
NC	700	X	12 - 13	627 HS	614 LS
NC	700	XA ABS	12 - 13	828 HS	657 LS
NC	700	XD ABS	12 - 13	828 HS	657 LS
NC	700	XD ABS w/DCT			
		(Parking Brake)	12 - 13	879 HF	
NM4	700	Vultus ABS w/DCT	15 - 15	700 HS	881 LS
NM4	700	Vultus ABS w/DCT			
		(Parking Brake)	15 - 15	879 HF	
NT	700	Deauville ABS	06 - 12	828 HS*	736 LS
NT	700	V Varadero, ABS	10 - 13	828 HS*	736 LS
TRX	700	XX	08 - 12	694 SI*	829 SI
VF	700	C Magna	84 - 84	542 HF*	2059
VF	700	C Magna	85 - 86	572 HF*	2046
VF	700	C Magna	87 - 87	542 HF	2046
VF	700	F Interceptor	84 - 85	572 HF*	542 HF
VF	700	S	84 - 85	542 HF*	2059
VFR	700	F Interceptor	88 - 89	627 HS*	614 LS
VFR	700	F, F2	86 - 87	600 HS*	542 LS
VT	700	C Shadow	84 - 85	561 HF*	2059
VT	700	C Shadow	86 - 86	561 HF*	2046
VT	700	C, Shadow	87 - 87	542 HF	2046
	750	X-ADV	17 - 19		881 LS
	750	X-ADV (Parking Brake)	17 - 19	879 HF	
CB	750	A	76 - 78	501 HF	2027
CB	750	C	80 - 81	526 HF*	2027
CB	750	C	82 - 84	542 HF*	2027
CB	750	C, F, FII, K	85 - 86	542 HF*	2027
CB	750	F	77 - 80	517 HF*	517 HF
CB	750	F	81 - 82	542 HF*	542 HF
CB	750	F1	75 - 76	501 HF	509 HF
CB	750	K	81 - 82	542 HF*	542 HF
CB	750	K Four	77 - 78	501 HF	2027
CB	750	K, L	79 - 80	526 HF*	2027
CB	750	K0-K6 Four	70 - 76	502 HF	2027
CB	750	KZ	82 - 82	542 HF	2027
CB	750	N, F, Seven Fifty	92 - 95	627 HS*	657 LS
CB	750	Nighthawk	91 - 02	627 HS	2059
CB	750	PZ	81 - 84	526 HF	2027
CB	750	SC	82 - 83	572 HF*	2027
CB	750	SS	77 - 79	508 HF*	517 HF
NC	750	D Integra	14 - 19	700 HS	881 LS
NC	750	D Integra w/DCT			
		(Parking Brake)	14 - 19	879 HF	
NC	750	S w/DCT	14 - 19	700 HS	881 LS
NC	750	S w/DCT			
		(Parking Brake)	14 - 19	879 HF	
NC	750	X w/DCT	14 - 19	700 HS	881 LS
NC	750	X w/DCT			
		(Parking Brake)	14 - 19	879 HF	
NC	750	XAE	14 - 19	700 HS	881 LS
VF	750	C	82 - 84	542 HF*	2059
VF	750	C, CD Magna	94 - 98	630 HS	2046
VF	750	C, Magna	88 - 93	542 HF	2046
VF	750	F	83 - 84	542 HF*	542 HF

* = 2 sets required / 2 jeux pour l'Avant.
Full compound selection, see under "Brake pad 1:1 Drawings" / Sélection complète de composés, voir "1:1 Schémas Plaquettes de frein".



RECOMMENDED
1xx - 2xx = Scooter Pads
5xx - 9xx = Street, Off Road & Racing Pads
2xxx = Brake Shoes




HONDA					
VF	750	Sport	82 - 83	542 HF*	2059
VFR	750	F	86 - 87	600 HS*	542 LS
VFR	750	F	88 - 98	627 HS*	630 LS
VFR	750	R	88 - 93	622 HS*	623 LS
VT	750	Black Widow	01 - 03	700 HS	2046
VT	750	C	83 - 85	561 HF	2059
VT	750	C, Shadow	86 - 96	542 HF	2046
VT	750	C2 Shadow A.C.E.	97 - 03	700 HS	2046
VT	750	C2 Shadow Spirit	07 - 11	700 HS	2046
VT	750	C2B	11 - 18	700 HS	
VT	750	C2B Phantom	10 - 18	700 HS	2046
VT	750	C2S ABS	13 - 14	828 HS	715 LS
VT	750	C4 Shadow	04 - 05	700 HS	2046
VT	750	CS ABS	13 - 14	828 HS	715 LS
VT	750	RS	11 - 13	700 HS	
VT	750	S	11 - 12	700 HS	
VT	750	Shadow Aero	13 - 18	700 HS	715 LS
PC	800	Pacific Coast	89 - 97	627 HS*	2046
VFR	800	Crossrunner	11 - 13	828 HS*	862 LS
VFR	800	F	14 - 16	809 HS*	862 LS
VFR	800	F	17 - 19	947 HS*	862 LS
VFR	800	FI Interceptor, ABS	02 - 05	735 HS*	736 LS
VFR	800	Interceptor	98 - 01	735 HS*	736 LS
VFR	800	Interceptor	06 - 18	828 HS*	736 LS
VFR	800	Interceptor ABS	06 - 18	828 HS*	736 LS
VFR	800	X Crossrunner	15 - 16	809 HS*	862 LS
VFR	800	X Crossrunner	17 - 18	947 HS*	862 LS
VT	800	C	88 - 94	542 HF	2046
CB	900	C	82 - 82	542 HF*	542 HF
CB	900	F	78 - 80	517 HF*	517 HF
CB	900	F, F2	81 - 84	572 HF*	542 HF
CBR	900	RR	98 - 99	734 HS*	657 LS
CBR	900	RR Fireblade	92 - 97	622 HS*	657 LS
CBR	900	RR Fireblade	98 - 03	734 HS*	657 LS
	919		02 - 02	622 HS*	657 LS
CBR	929	RR	00 - 01	734 HS*	657 LS
CBR	954	RR	02 - 03	734 HS*	657 LS
	1000	Pioneer	16 - 21	981 PSI*	975 PSI*
	1000	Talon	21 - 21	981 PSI*	975 PSI*
	1000	Talon R	19 - 21	981 PSI*	975 PSI*
	1000	Talon X	19 - 21	981 PSI*	975 PSI*
	1000	Talon X-4	20 - 20	981 PSI*	975 PSI*
CB	1000	C	83 - 84	542 HF*	542 HF
CB	1000	F (Big One)	93 - 97	622 HS*	657 LS
CB	1000	R	08 - 16	809 HS*	862 LS
CB	1000	R	18 - 21	947 HS*	862 LS
CB	1000	R ABS	08 - 16	828 HS*	862 LS
CB	1000	R+ Neo Sports Cafe	18 - 18	947 HS*	862 LS
CBR	1000	F	87 - 88	600 HS*	542 LS
CBR	1000	F	89 - 92	627 HS*	630 LS
CBR	1000	F, FP	93 - 99	685 HS*	685 LS
CBR	1000	RR Fireblade	04 - 05	809 HS*	657 LS
CBR	1000	RR Fireblade	06 - 08	809 HS*	834 LS
CBR	1000	RR Fireblade	09 - 16	809 SP*	834 LS
CBR	1000	RR Fireblade	17 - 19	947 SP*	834 LS
CBR	1000	RR SP	14 - 19	901 SP*	834 LS
CBR	1000	RR SP2	17 - 19	901 SP*	834 LS
CBR	1000	RR-R Fireblade	20 - 21	985 SP*	730 LS
CBR	1000	RR-R SP Fireblade	20 - 21	901 SP*	730 LS
CBX	1000		78 - 80	517 HF*	517 HF
CBX	1000		81 - 82	572 HF*	542 HF
CRF	1000	L Africa Twin	16 - 19	940 SP*	657 LS
CRF	1000	L Africa Twin (Parking Brake)	16 - 19	879 HF	
CRF	1000	L Africa Twin Adventure Sports	18 - 19	940 SP*	657 LS
CRF	1000	L Africa Twin Adventure Sports (Parking Brake)	18 - 19	879 HF	



RECOMMENDED
1xx - 2xx = Scooter Pads
5xx - 9xx = Street, Off Road & Racing Pads
2xxx = Brake Shoes




HONDA					
GL	1000	Gold Wing	81 - 81	517 HF*	517 HF
GL	1000	Gr. Tour. Gold Wing	81 - 82	517 HF*	517 HF
GL	1000	K1, K2 Gold Wing	75 - 77	508 HF*	509 HF
GL	1000	K3 Gold Wing	78 - 79	517 HF*	509 HF
RC213V-S	1000		16 - 18	901 SP*	730 LS
RVT	1000	RC51	00 - 06	734 HS*	657 LS
VF	1000	F, FII	84 - 86	542 HF*	542 HF
VF	1000	R	84 - 87	542 HF*	
VF	1000	R	86 - 86	542 HF*	542 HF
VTR	1000	SP-1, SP-2	00 - 06	734 HS*	657 LS
VTR	1000	Super Hawk	97 - 07	622 HS*	657 LS
CB	1100		13 - 13	828 HS*	657 LS
CB	1100	, EX	14 - 19	734 HS*	657 LS
CB	1100	EX ABS	17 - 19	734 HS*	657 LS
CB	1100	F	83 - 85	542 HF*	542 HF
CB	1100	RS ABS	17 - 19	947 HS*	657 LS
CB	1100	X-11	00 - 03	735 HS*	736 LS
CBR	1100	XX Super Blackbird	96 - 07	735 HS*	736 LS
CRF	1100	L Africa Twin	20 - 21	940 SP*	657 LS
CRF	1100	L Africa Twin Adventure Sports	20 - 21	940 SP*	657 LS
GL	1100	-1, DLX Gold Wing	81 - 87	542 HF*	542 HF
GL	1100	A Gold Wing	79 - 83	517 HF*	517 HF
GL	1100	Gold Wing	82 - 83	572 HF*	542 HF
ST	1100	A6 ABS-TCS-CBS	96 - 01	721 HS*	722 LS
ST	1100	ABS-TCS	92 - 95	627 HS*	654 LS
VF	1100	C	83 - 86	572 HF*	542 HF
VF	1100	S	84 - 85	572 HF*	542 HF
VT	1100	C Shadow	87 - 93	542 HF	2046
VT	1100	C Shadow	94 - 96	627 HS*	2046
VT	1100	C2 Shadow A.C.E.	95 - 04	627 HS	657 LS
VT	1100	C2 Shadow Sabre	00 - 05	627 HS	657 LS
VT	1100	C3 Shadow Aero	98 - 04	627 HS	657 LS
VT	1100	T Shadow	98 - 04	627 HS*	657 LS
GL	1200	A, I Gold Wing	84 - 86	572 HF*	542 HF
GL	1200	DX Gold Wing	86 - 87	572 HF*	542 HF
GL	1200	Gold Wing	84 - 86	572 HF*	542 HF
VFR	1200	F	10 - 19	869 HS*	862 LS
VFR	1200	F w/DCT	10 - 19	869 HS*	892 LS
VFR	1200	F w/DCT (Parking Brake)	10 - 19	879 HF	
VFR	1200	XC Crosstourer	12 - 19	828 SP*	892 LS
VFR	1200	XDC Crosstourer w/DCT	12 - 19	828 SP*	892 LS
VFR	1200	XDC Crosstourer w/DCT (Parking Brake)	12 - 19	879 HF	
CB	1300		05 - 13	734 HS*	657 LS
CB	1300	R	02 - 04	734 HS*	715 LS
CB	1300	S	11 - 15	828 HS*	657 LS
CTX	1300		14 - 18	828 HS*	630 LS
ST	1300	, ABS	02 - 07	735 HS*	722 LS
ST	1300	, ABS	08 - 13	828 HS*	722 LS
VT	1300	CX A Fury	10 - 18	627 HS	657 LS
VT	1300	CXA A Fury ABS	10 - 18	828 HS	736 LS
VT	1300	Interstate	11 - 15	627 HS	657 LS
VT	1300	Sabre	11 - 13	627 HS	657 LS
VT	1300	Stateline	11 - 16	627 HS	657 LS
VTX	1300	C	04 - 09	627 HS	657 LS
VTX	1300	S	03 - 07	627 HS	657 LS
GL	1500	Gold Wing Aspencade, Interstate, SE	94 - 00	647 HS*	542 LS
GL	1500	Gold Wing, Gold Wing SE	88 - 99	647 HS*	542 LS
GL	1500	Valkyrie	96 - 03	627 HS*	630 LS
GL	1800	C Valkyrie	14 - 15	734 HS*	880 LS
GL	1800	Gold Wing	01 - 17	735 HS*	880 LS
GL	1800	Gold Wing	18 - 21	952 HS*	953 LS

* = 2 sets required / 2 jeux pour l'Avant.
Full compound selection, see under "Brake pad 1:1 Drawings" / Sélection complète de composés, voir "1:1 Schémas Plaquettes de frein".

				RECOMMENDED 1xx - 2xx = Scooter Pads 5xx - 9xx = Street, Off Road & Racing Pads 2xxx = Brake Shoes	
HONDA					
GL	1800	Gold Wing			
		(Parking Brake)	18 - 20	879 HF	
GL	1800	Gold Wing F6B	13 - 16	735 HS*	880 LS
NRX	1800	Valkyrie Rune	04 - 05	735 HS*	736 LS
VTX	1800		01 - 12	735 HS*	736 LS
HUSABERG					
		all models	89 - 92	608 SI	586 SI
		all models	93 - 98	671 SI	586 SI
TE	125		13 - 13	671 SI	791 SI
FE	250		13 - 13	671 SI	791 SI
TE	250		11 - 13	671 SI	791 SI
TE	300		11 - 13	671 SI	791 SI
	350		91 - 92	608 SI	586 SI
FE	350		13 - 13	671 SI	791 SI
FE	390		10 - 13	671 SI	791 SI
FC	400		99 - 02	671 RSI	675 RSI
FE	400	,S,E	99 - 03	671 SI	675 SI
FS	400	e, c	01 - 03	631 RSI	675 RSI
FC	450		03 - 08	671 RSI	675 RSI
FE	450		09 - 13	671 SI	791 SI
FE	450	e	04 - 08	671 SI	675 SI
FS	450	c	06 - 08	842 RSI	675 RSI
FS	450	e, c	03 - 05	631 RSI	675 RSI
FX	450	e	03 - 08	671 RSI	675 RSI
FC	470	, e	01 - 02	671 RSI	675 RSI
FX	470	e	01 - 02	671 RSI	675 RSI
	500		91 - 98	608 SI	586 SI
	501	Enduro	91 - 94	608 SI	586 SI
FC	501		99 - 01	671 RSI	675 RSI
FE	501		13 - 13	671 SI	791 SI
FE	501	,S,E	99 - 04	671 SI	675 SI
FC	550		01 - 05	671 RSI	675 RSI
FE	550	e	04 - 08	671 SI	675 SI
FE	570		09 - 13	671 SI	791 SI
	600	Enduro	91 - 94	608 SI	586 SI
FC	600		99 - 01	671 RSI	675 RSI
FE	600	,S,E	99 - 02	671 SI	675 SI
FE	650	e	01 - 08	671 SI	675 SI
FS	650	e, c	01 - 05	631 RSI	675 RSI
FS	650	e, c	06 - 08	842 RSI	675 RSI
FX	650	e	01 - 05	671 RSI	675 RSI
HUSQVARNA					
		all models	72 - 79	2116	2116
		all models	87 - 88		2116
		all models CR,TC,TE,			
		WR	92 - 94	611 SI	536 SI
		all models TE,TC,WR,			
		CR,AE	89 - 89	608 SI	2116
		all rear drum models	86 - 86		2117
EE		5	19 - 21	794 RSI	794 RSI
	50	Husky Boy J, R, S	01 - 10	559 RSI	
	50	Racing	98 - 98	105 HF	
CR	50	Junior	06 - 06	803 RSI	
CR	50	Pro Senior	06 - 06	803 RSI	794 RSI
CR	50	Senior	06 - 06	803 RSI	794 RSI
SM	50		02 - 02	148 HF	105 HF
TC	50		17 - 21	794 RSI	794 RSI
CR	65		12 - 13	783 RSI	872 RSI
TC	65		17 - 21	783 RSI	783 RSI
TC	85		14 - 20	885 RSI	872 RSI
TC	85		21 - 21	671 RSI	791 RSI
CR	125		83 - 84	2118	2116
CR	125		85 - 90	519 SI	2117
CR	125		96 - 04	671 RSI	675 RSI
CR	125		05 - 13	671 RSI	791 RSI
CR/RL	125		81 - 82	2117	2116

				RECOMMENDED 1xx - 2xx = Scooter Pads 5xx - 9xx = Street, Off Road & Racing Pads 2xxx = Brake Shoes	
HUSQVARNA					
CR/WR	125		91 - 91	608 SI	692 SI
CX	125		84 - 85	519 SI	
SM	125	S	09 - 13	671 HF	675 HF
SM	125	S 4T	11 - 13	671 HF	675 HF
SM	125	Supermotard, S	99 - 13	671 HF	675 HF
TC	125		14 - 21	671 RSI	791 RSI
TE	125		14 - 16	671 SI	791 SI
TE	125	4T	11 - 13	671 HF	675 HF
TX	125		17 - 19	671 SI	791 SI
WR	125		80 - 80	2117	2116
WR	125		85 - 90	608 SI	2117
WR	125		96 - 13	671 SI	675 SI
WR/XC	125		82 - 82	2117	2117
WR/XC	125		83 - 84	2118	2117
WRE	125		96 - 13	671 SI	675 SI
WRK	125		90 - 90	608 SI	586 SI
XC	125		85 - 85		2116
TE	150	I	20 - 20	671 SI	791 SI
	200	Prof	86 - 86	519 SI*	519 SI
CR	240		84 - 85	519 SI	
WR	240		87 - 91	608 SI	692 SI
WRK	240		90 - 90	608 SI	586 SI
CR	250		81 - 82	2117	2116
CR	250		83 - 84	2118	2116
CR	250		85 - 87	519 SI	2117
CR	250		91 - 91	608 SI	692 SI
CR	250		96 - 04	671 RSI	675 RSI
CR	250		05 - 05	671 RSI	791 RSI
CX	250		84 - 85	519 SI	
FC	250		14 - 21	671 RSI	791 RSI
FE	250		14 - 21	671 SI	791 SI
TC	250		02 - 03	671 RSI	675 RSI
TC	250		04 - 21	671 RSI	791 RSI
TE	250		02 - 13	671 SI	675 SI
TE	250		14 - 18	671 SI	791 SI
TE	250	4T	10 - 13	671 SI	791 SI
TE	250	I	20 - 20	671 SI	791 SI
WR	250		96 - 13	671 SI	675 SI
WR/OR	250		80 - 80	2117	2116
WR/XC	250		81 - 82	2117	2117
WR/XC	250		83 - 84	2118	2117
WR/XC	250		87 - 90	608 SI	
WR	260		90 - 93	608 SI	692 SI
TC	300		14 - 15	671 RSI	791 RSI
TE	300		14 - 19	671 SI	791 SI
WR	300		09 - 13	671 SI	791 SI
TE	310	4T	10 - 13	671 SI	791 SI
FC	350		14 - 21	671 RSI	791 RSI
FE	350		14 - 21	671 SI	791 SI
TE	350		96 - 13	671 SI	675 SI
TE	350	Enduro	90 - 90	608 SI	586 SI
WR	360		98 - 13	671 SI	675 SI
WR/OR	390		80 - 80	2117	2116
WR/XC	390		82 - 82	2117	2117
	400	Enduro	85 - 88	519 SI	2117
SM	400	R	02 - 02	566 HF	675 HF
TE	400		01 - 13	671 SI	675 SI
WR	400		87 - 88	608 SI	2117
WRX	400		85 - 85	2118	2116
	401	Svartpilen	17 - 20	877 HS	675 LS
	401	Vitpilen	17 - 20	877 HS	675 LS
TE	410		96 - 13	671 SI	675 SI
	430	Auto	87 - 87	608 SI	2117
	430	Enduro	85 - 88	519 SI	2116
CR	430		82 - 82	2117	2116
CR	430		87 - 89	608 SI	2117
CR/WR/CS	430		81 - 81	2117	2117
WR	430		87 - 89	608 SI	2116

* = 2 sets required / 2 jeux pour l'Avant.
Full compound selection, see under "Brake pad 1:1 Drawings" / Sélection complète de composés, voir "1:1 Schémas Plaquettes de frein".

RECOMMENDED
1xx - 2xx = Scooter Pads
5xx - 9xx = Street, Off Road & Racing Pads
2xxx = Brake Shoes

HUSQVARNA						
XC	430		87 - 88	608 SI	2117
SMR	449		11 - 13	762 RST	791 RSI
TC	449		11 - 13	671 RSI	791 RSI
TE	449		11 - 13	671 SI	791 SI
FC	450		14 - 21	671 RSI	791 RSI
FE	450		14 - 21	671 SI	791 SI
FS	450		15 - 20	841 RST	791 RSI
SM	450	R	03 - 04	566 HF	675 HF
SM	450	R	05 - 05	762 RST	675 RSI
SM	450	R	06 - 13	762 RST	791 RSI
SM	450	RR	06 - 10	762 RST	791 RSI
TC	450		02 - 03	671 RSI	675 RSI
TC	450		04 - 10	671 RSI	791 RSI
TE	450		02 - 10	671 SI	675 SI
TE	450		14 - 14	671 SI	791 SI
CR	500		83 - 84	2118	2116
CR	500		86 - 87	519 SI	2117
CX/CR	500		84 - 85	519 SI	2116
TC	500		86 - 86	519 SI	2117
WR/XC/AE	500		83 - 84	2118	2117
XC	500		87 - 88	608 SI	2117
FE	501		14 - 21	671 SI	791 SI
	504		83 - 83	519 SI	2117
	510		87 - 89	608 SI	2117
	510		90 - 90	608 SI	586 SI
SM	510	Centennial	06 - 06	762 RST	791 RSI
SM	510	R	05 - 05	762 RST	675 RSI
SM	510	R	06 - 10	762 RST	791 RSI
TC	510		02 - 03	671 RSI	675 RSI
TC	510		04 - 10	671 RSI	791 RSI
TE	510		86 - 87	519 SI	2117
TE	510		02 - 10	671 SI	675 SI
TE	510	Centennial	04 - 05	671 SI	675 SI
SMR	511		11 - 13	762 RST	791 RSI
TE	511		11 - 14	671 SI	791 SI
	570	Nox	01 - 03	706 HF	675 HF
SM	570	R	01 - 08	566 HF	675 HF
TC	570		01 - 13	671 RSI	675 RSI
TE	570		01 - 13	671 SI	675 SI
LT	610		00 - 02	706 HF	675 HF
SM	610	ie	07 - 10	762 RST	791 RSI
SM	610	Super Motard, S	98 - 00	706 HF	675 HF
TC	610		96 - 13	671 RSI	675 RSI
TC	610	Cross	91 - 91	608 SI	692 SI
TE	610		91 - 95	608 SI	692 SI
TE	610	Rallye	96 - 13	671 RSI	675 RSI
SM	630		10 - 10	762 HS	791 HF
SMR	630		04 - 08	706 RST	675 RSI
TE	630		10 - 13	671 HS	791 HF
TE	630		14 - 14	671 SI	791 SI
STR	650	CRC	07 - 07	762 HF	791 HF
TR	650	Strada	13 - 13	674 HS	675 LS
TR	650	Terra	13 - 13	674 HS	675 LS
	701	Enduro LR	20 - 20	674 HS	675 LS
	701	Svartpilen	18 - 19	706 HS	675 LS
	701	Vitpilen	18 - 20	706 HS	675 LS
FE	701	Enduro	17 - 20	674 HS	675 LS
SM	701	Supermoto	15 - 20	762 HS	675 LS
	900	Norden	20 - 20	706 SP*	671 LS
	900	Nuda	12 - 13	706 HS*	675 LS
	900	Nuda R, ABS	12 - 13	841 HS*	675 LS
HYOSUNG					
	50	Avanti	99 - 02	101 HF	
	50	Rush	97 - 01	101 HF	
	50	Sense	98 - 07	101 HF	
	50	Super Cab	95 - 98	101 HF	
	50	Super Cab Plus	98 - 98	101 HF	

RECOMMENDED
1xx - 2xx = Scooter Pads
5xx - 9xx = Street, Off Road & Racing Pads
2xxx = Brake Shoes

HYOSUNG					
SB	50		00 - 03	101 HF	
SB	50	P	00 - 03	101 HF	
SD	50		00 - 06	101 HF	
SF	50		99 - 06	101 HF	
	100	Cab	98 - 01	101 HF	
EZ	100		00 - 05	101 HF	
	110	Midas Plus	98 - 04	101 HF	2015
FX	110	110	02 - 04	101 HF	2015
KR	110	Master	04 - 05	101 HF	2015
	125	Aquila	00 - 04	611 HF	
	125	Boomer	03 - 03	123 CT	103 CT
	125	Cruise II	99 - 06	524 HF	
	125	Cruise II Classic	99 - 06	524 HF	
	125	Cruiser	92 - 06	524 HF	
	125	Exceed	02 - 06	123 CT	103 CT
	125	GA-4	99 - 99	557 HF	
	125	Grand Prix	98 - 04	123 CT	
	125	Grand Prix Plus	02 - 05	551 HF	
	125	Hyper	99 - 09	123 CT	
	125	V2	99 - 11	627 HF	
GA	125		98 - 06	524 HF	
GA	125	F	00 - 06	524 HF	
GD	125	EXIV	12 - 16	734 HF	544 HF
GF	125		98 - 04	524 HF	
GPS	125	D	00 - 03	123 CT	
GS	125		99 - 99	524 HF	
GT	125		07 - 10	814 HF*	814 HF
GT	125	Comet	02 - 03	551 HF	
GT	125	Comet	04 - 06	814 HF	814 HF
GT	125	Naked	13 - 13	814 HF*	814 HF
GT	125	R Supersport	07 - 16	814 HF*	814 HF
GV	125	Aguila	02 - 04	551 HF	
GV	125	Aguila	05 - 11	814 HF	
RT	125	Karion	02 - 06	551 HF	
RT	125	Karion	07 - 09	814 HF*	814 HF
RX	125		00 - 07	551 HF	
RX	125	SM	07 - 11	814 HF*	814 HF
TN	125		92 - 95	524 HF	
XRX	125		07 - 09	814 HF*	814 HF
XRX	125	Offroad	99 - 06	551 HF	
	150	Exceed	02 - 04	123 CT	103 CT
	150	Grand Prix	98 - 01	123 CT	
	250	Aquila	00 - 09	627 HF	
GD	250	EXIV-R	15 - 17	734 HS	747 HF
GT	250	Comet	02 - 02	597 HS	556 LS
GT	250	Comet	03 - 08	814 HF	814 HF
GT	250	iR	13 - 14	814 HS*	814 LS
GT	250	iR	15 - 15	734 HS*	747 HF
GT	250	P	13 - 13	814 HF	814 HF
GT	250	R	07 - 12	814 HF*	814 HF
GV	250		02 - 09	551 HF	2014
GV	250		17 - 18	734 HS	638 HF
GA	300		98 - 01	557 HF	
GT	300	R	16 - 17	734 HS	747 HF
GV	300		16 - 17	734 HS	638 HF
TE	400		05 - 06	536 SI*	649 SI
XRX	400		05 - 08	551 HF	604 HF
RX	450	SM	08 - 11	762 HS	675 LS
TE	450		07 - 11	536 SI*	649 SI
	600	Comet	02 - 02	597 HS	556 LS
	600	Comet	03 - 03	551 HF*	
GT	650		04 - 12	814 HS*	814 LS
GT	650	i	13 - 13	734 HS*	814 LS
GT	650	i Naked	15 - 15	734 HS*	814 LS
GT	650	iR	13 - 14	734 HS*	814 LS
GT	650	iR	15 - 15	734 HS*	747 HF
GT	650	P	16 - 16	814 HS*	814 LS
GT	650	R	05 - 13	814 HS*	814 LS

* = 2 sets required / 2 jeux pour l'Avant.
Full compound selection, see under "Brake pad 1:1 Drawings" / Sélection complète de composés, voir "1:1 Schémas Plaquettes de frein".

				RECOMMENDED 1xx - 2xx = Scooter Pads 5xx - 9xx = Street, Off Road & Racing Pads 2xxx = Brake Shoes	
HYOSUNG					
GT	650	S	05 - 13	814 HS*	814 LS
GT	650	TTC	07 - 11	814 HS*	814 LS
GT	650	TTC / Custom Trendkiller	07 - 11	814 HS*	814 LS
GT	650	X	07 - 11	814 HS*	814 LS
GV	650	Aguila	04 - 05	551 HF*	769 HF
GV	650	Aguila	06 - 11	814 HS*	814 LS
ST	700		11 - 13	734 HS	814 LS
ST	700	i Deluxe	13 - 13	734 HS	814 LS
INDIAN					
		Chief	01 - 08	678 H.HS	678 H.LS
		Scout	01 - 08	678 H.HS	678 H.LS
	1000	Scout Sixty	16 - 16	929 H.HS	930 H.LS
	1000	Scout Sixty	17 - 18	674 H.HS	675 H.LS
	1130	Scout	15 - 16	929 H.HS	930 H.LS
	1200	Scout	17 - 20	674 H.HS	675 H.LS
	1200	Scout Bobber	17 - 20	674 H.HS	675 H.LS
FTR	1200		19 - 20	900 H.HS*	730 LS
FTR	1200	S	19 - 20	900 H.HS*	730 LS
	1700	Chief Blackhawk	11 - 13	566 H.HS*	506 H.LS
	1700	Chief Bomber	10 - 13	566 H.HS*	506 H.LS
	1700	Chief Classic	10 - 13	566 H.HS*	506 H.LS
	1700	Chief Dark Horse	10 - 13	566 H.HS*	506 H.LS
	1700	Chief Deluxe	09 - 13	566 H.HS*	506 H.LS
	1700	Chief Roadmaster	09 - 13	566 H.HS*	506 H.LS
	1700	Chief Standard	09 - 13	566 H.HS*	506 H.LS
	1700	Chief Vintage	09 - 13	566 H.HS*	506 H.LS
	1800	Challenger	20 - 20	900 H.HS*	630 H.LS
	1800	Challenger Dark Horse	20 - 20	900 H.HS*	630 H.LS
	1800	Challenger Limited	20 - 20	900 H.HS*	630 H.LS
	1800	Chief	15 - 18	782 H.HS*	630 H.LS
	1800	Chief Classic	14 - 18	782 H.HS*	630 H.LS
	1800	Chief Dark Horse	15 - 19	782 H.HS*	630 H.LS
	1800	Chief Vintage	14 - 19	782 H.HS*	630 H.LS
	1800	Chieftain	14 - 18	782 H.HS*	630 H.LS
	1800	Chieftain Classic	15 - 18	782 H.HS*	630 H.LS
	1800	Chieftain Dark Horse	15 - 18	782 H.HS*	630 H.LS
	1800	Chieftain Limited	15 - 18	782 H.HS*	630 H.LS
	1800	Dark Horse	16 - 18	782 H.HS*	630 H.LS
	1800	Roadmaster	15 - 19	782 H.HS*	630 H.LS
	1800	Roadmaster Classic	15 - 18	782 H.HS*	630 H.LS
	1800	Roadmaster Elite	15 - 18	782 H.HS*	630 H.LS
	1800	Springfield	16 - 19	782 H.HS*	630 H.LS
	1800	Springfield Dark Horse	15 - 20	782 H.HS*	630 H.LS
ITALJET					
	50	AJP Caliper incl. pin/spring	90 - 19	188 HF	
	50	Bazooka	93 - 02	111 HF	
	50	Cruise	95 - 97	111 HF	
	50	Dragster	99 - 06	105 HF	105 HF
	50	Formula	94 - 00	117 HF	123 HF
	50	Formula Air	99 - 00	105 HF	
	50	Formula L.C.	98 - 00	105 HF	105 HF
	50	Jet-Set	02 - 03	167 HF	
	50	Pista 2	92 - 97	111 HF	
	50	Rollercraft	08 - 12	200 HF	119 HF
	50	Scoop	93 - 97	111 HF	
	50	Torpedo	98 - 99	105 HF	
	50	Torpedo 4T	01 - 03	105 HF	
	50	Yankee 8	94 - 02	111 HF	111 HF
SM	50		02 - 05	148 HF	
SX1	50		08 - 10	141 HF	
	80	Formula	94 - 97	117 HF	123 HF
	100	Millennium 2T	01 - 01	101 HF	
	100	Millennium 2T	01 - 01	167 HF	
	125	Amarcord	08 - 16	121 HF	

				RECOMMENDED 1xx - 2xx = Scooter Pads 5xx - 9xx = Street, Off Road & Racing Pads 2xxx = Brake Shoes	
ITALJET					
	125	Dragster	99 - 03	105 CT	105 CT
	125	Dragster	20 - 20	151 CT	157 CT
	125	Formula	94 - 03	117 CT	123 CT
	125	Formula L.C.	99 - 03	105 CT	105 CT
	125	Jet-Set	02 - 03	167 CT	
	125	Jupiter	02 - 03	128 CT	105 CT
	125	Millennium	00 - 03	101 CT	
	125	Millennium	00 - 03	167 CT	
	125	Torpedo	99 - 06	105 CT	
	125	Torpedo	08 - 11	200 CT	119 CT
	125	Twin	98 - 01	105 CT	105 CT
SM	125		02 - 05	652 HF	
	150	Jet-Set	02 - 03	167 CT	
	150	Jupiter	02 - 03	128 CT	105 CT
	150	Millennium	00 - 03	101 CT	
	150	Millennium	00 - 03	167 CT	
	150	Torpedo	08 - 12	200 CT	119 CT
	150	Torpedo 4T	01 - 01	105 CT	
	180	Dragster	99 - 03	105 CT	105 CT
	200	Dragster	20 - 20	151 CT	157 CT
	250	Jupiter	01 - 03	128 CT	173 CT
	350		83 - 83	519 HF*	
	650	Bazooka	06 - 06	814 HS*	814 LS
	650	Grifon	06 - 07	814 HS*	814 LS
	900	Grifon	00 - 00	566 HF	
JAWA					
CZ	125	2T	95 - 00	506 HF	
CZ	125	MX	95 - 00	506 HF	
CZ	180		92 - 92	506 HF	
	300	Trail	93 - 93	506 HF	
	350		93 - 95	699 HF	
JOHN DEERE					
HPX	350	Gator	10 - 14	908 SI*	908 SI*
	500	Buck Left	05 - 05	754 SI	767 SI
	500	Buck Right	05 - 05	767 SI	
	500	Buck EX, EXT Left	05 - 05	754 SI	767 SI
	500	Buck EX, EXT Right	05 - 05	767 SI	
	500	Trail Buck Left	05 - 05	754 SI	767 SI
	500	Trail Buck Right	05 - 05	767 SI	
XUV	625	Gator	11 - 11	912 ATS*	
	650	Trail Buck Left	05 - 05	754 SI	767 SI
	650	Trail Buck Right	05 - 05	767 SI	
	650	Trail Buck EX, EXT Left	05 - 05	754 SI	767 SI
	650	Trail Buck EX, EXT Right	05 - 05	767 SI	
XUV	825	Gator	11 - 11	912 ATS*	
XUV	855	D Gator	11 - 11	912 ATS*	
JOTAGAS					
JT	125		14 - 19	939 RSI	803 RSI
JT	250		14 - 19	939 RSI	803 RSI
JT	280		14 - 19	939 RSI	803 RSI
JT	300		14 - 19	939 RSI	803 RSI
KAWASAKI					
AE	50		81 - 82	2015	2015
AR	50		81 - 82	544 HF	2015
KX	60		83 - 03	2093	2093
KX	65		00 - 21	752 RSI	536 RSI
KD	80		80 - 87	2015	2015
KD	80		88 - 90	544 HF	2015
KX	80		79 - 82	2087	2087
KX	80		83 - 83	2092	2093
KX	80		84 - 87	544 SI	2093
KX	80		88 - 96	544 RSI	592 RSI
KX	80		97 - 00	726 RSI	592 RSI

* = 2 sets required / 2 jeux pour l'Avant.
Full compound selection, see under "Brake pad 1:1 Drawings" / Sélection complète de composés, voir "1:1 Schémas Plaquettes de frein".

RECOMMENDED
1xx - 2xx = Scooter Pads
5xx - 9xx = Street, Off Road & Racing Pads
2xxx = Brake Shoes

KAWASAKI					
KX	85		01 - 21	726 RSI	592 RSI
KX	85	II	01 - 21	726 RSI	592 RSI
KE	100		79 - 97	2015	2015
KH	100		76 - 77	2015	2015
KH	100		78 - 81	2014	2015
KM	100		78 - 81	2015	2015
KX	100		88 - 96	544 RSI	592 RSI
KX	100		97 - 21	726 RSI	592 RSI
KLF	110	Mojave	87 - 88	2015*	2183
KLT	110		84 - 86	2015	2183
KLX	110		02 - 21	2093	2015
	125	Ninja	19 - 19	638 HF	638 HF
J	125		15 - 19	183 CT	204 CT
KE	125		76 - 85	2039	2183
KE	125		86 - 91	546 HF	2014
KLX	125		10 - 14	611 HF	536 HF
KLX	125	D-Tracker	10 - 14	611 HF	536 HF
KLX	125	L	03 - 06	702 SI	
KX	125		74 - 81	2039	2183
KX	125		82 - 82	544 SI	2183
KX	125		83 - 85	546 SI	2025
KX	125		86 - 86	546 RSI	586 RSI
KX	125		87 - 88	602 HF	586 SI
KX	125		89 - 93	611 RSI	632 RSI
KX	125		94 - 94	694 RSI	632 RSI
KX	125		95 - 08	694 RSI	604 RSI
Z	125		19 - 19	638 HF	638 HF
Z	125	Pro	17 - 18	925 HF	536 HF
Z	125	Pro KRT Ed.	18 - 18	925 HF	536 HF
Z	125	Pro KRT SE	18 - 18	925 HF	536 HF
KLX	140	, L	08 - 21	611 SI	592 SI
KLX	150	D-Tracker	16 - 18	611 HF	536 HF
KLX	150	L	14 - 15	611 HF	536 HF
KLT	160		85 - 85	2015	2183
KDX	175		80 - 82	2039	2183
KE	175		76 - 78	2039	2183
KE	175		79 - 83	2039	2056
KLF	185	Bayou	85 - 85		2038
KLF	185	Bayou	86 - 88	2040*	2038
KLT	185		86 - 87	2015	2183
KDX	200		83 - 85	2056	2025
KDX	200		93 - 93	611 SI	632 SI
KDX	200		94 - 99	694 SI	632 SI
KDX	200	C	86 - 88	546 SI	2025
KDX	200	SR	89 - 92	546 SI	632 SI
KLT	200		81 - 84	2015	2040
KZ	200		78 - 79	516 HF	2014
KDX	220	R	97 - 05	694 SI	632 SI
KLF	220	Bayou	88 - 02	2040*	2038
EL	250		91 - 94	557 HF	2038
EL	250		93 - 94	557 HS	2038
EL	250	Eliminator	88 - 89	557 HF	2038
EX	250	R Ninja	86 - 87	557 HF	557 HF
EX	250	R Ninja	88 - 07	597 HF	615 HF
EX	250	R Ninja	08 - 17	638 HS	638 LS
EX	250	R Ninja	18 - 20	955 HS	638 LS
EX	250	SL Ninja	15 - 17	638 HS	638 LS
KDX	250		80 - 82	2040	2016
KDX	250		83 - 84	2040	2183
KDX	250	SR	91 - 94	611 SI	632 SI
KH	250		76 - 80	510 HF	2088
KL	250		78 - 80	2040	2016
KL	250		80 - 84	2039	2056
KL	250	(KLR 250)	85 - 97	546 HF	2056
KL	250	Super Sherpa	00 - 02	726 SI	586 SI
KLF	250	Bayou	03 - 11	2040*	2038
KLR	250		84 - 05	546 HF	2038
KLT	250		82 - 83	2015	2040

RECOMMENDED
1xx - 2xx = Scooter Pads
5xx - 9xx = Street, Off Road & Racing Pads
2xxx = Brake Shoes

KAWASAKI					
KLT	250	Police	84 - 84	2015	2040
KLT	250	Prairie	83 - 85	2015	2040
KLX	250		79 - 80	2039	2183
KLX	250		93 - 96	694 SI	632 SI
KLX	250		98 - 07	694 SI	604 SI
KLX	250		14 - 18	611 HF	604 HF
KLX	250	Camo	18 - 18	611 HF	604 HF
KLX	250	S	09 - 14	611 HF	604 HF
KLX	250	SF	09 - 10	611 HF	604 HF
KSF	250	Mojave	87 - 02	591 SI*	592 SI
KT	250	all models	75 - 80	2039	2183
KX	250		75 - 81	2040	2016
KX	250		82 - 82	544 SI	2183
KX	250		83 - 85	546 SI	2183
KX	250		86 - 86	546 RSI	586 RSI
KX	250		87 - 88	602 HF	586 SI
KX	250		89 - 93	611 RSI	632 RSI
KX	250		94 - 94	694 RSI	632 RSI
KX	250		95 - 08	694 RSI	604 RSI
KXF	250	Tecate	87 - 88	591 SI*	592 SI
KX-F	250		04 - 10	694 RSI	790 RSI
KX-F	250	DFI	11 - 21	694 RSI	790 RSI
KXT	250	Tecate	84 - 84		544 HF
KXT	250	Tecate	85 - 86	546 SI	586 SI
KXT	250	Tecate	87 - 88	591 SI	592 SI
KZ	250		80 - 83	2016	2014
SC	250	Epsilon	02 - 06	146 MS*	174 MS
Z	250	SL	15 - 17	638 HF	638 HF
ZX-25R	250		20 - 20	806 HS	657 LS
EX	300	R Ninja, ABS	13 - 17	638 HS	638 LS
J	300		14 - 19	183 MS	204 MS
KAF	300	Mule 500	92 - 95	2053*	
KAF	300	Mule 550	03 - 05	2053*	
KEF	300	Lakota	95 - 04	591 SI*	592 SI
KLE	300	Versys-X	17 - 20	627 HS	638 LS
KLF	300	Bayou	86 - 87	2054*	2038*
KLF	300	Bayou	88 - 04	546 SI*	2038*
KLF	300	Bayou 4x4 Left	89 - 05	611 SI	2197
KLF	300	Bayou 4x4 Right	89 - 05	638 SI	
KLX	300	R	97 - 07	694 SI	604 SI
KVF	300	Brute Force	13 - 17	810 SI*	810 SI
KVF	300	Prairie	99 - 02	536 SI*	
KVF	300	Prairie 4x4	99 - 05	536 SI*	
Z	300		15 - 16	638 HS	638 LS
EX	305		83 - 83	557 HF	2038
KZ	305		81 - 88	540 HF	2038
S2A	350		73 - 73	503 HF	2088
KVF	360	Prairie 2x4, 4x4	03 - 08	536 SI*	
	400	Ninja R Left	11 - 11	705 HS	687 LS
	400	Ninja R Right	11 - 11	704 HS	
EX	400	Ninja	18 - 20	955 HS*	638 LS
EX	400	Ninja KRT	18 - 18	638 HS*	638 LS
EX	400	Ninja SE	18 - 19	955 HS*	638 LS
KFX	400		02 - 05	592 SI*	649 SI
KH	400		76 - 78	510 HF	2088
KLF	400	Bayou Left	93 - 99	611 SI	2197
KLF	400	Bayou Right	93 - 99	638 SI	
KLX	400	R	03 - 04	694 SI	604 SI
KLX	400	SR	03 - 04	694 HF	604 HF
KVF	400	Prairie	97 - 98	536 SI*	2197
KVF	400	Prairie 2x4	99 - 01	536 SI*	
KVF	400	Prairie 4x4	99 - 02	536 SI*	
KZ	400		74 - 77	510 HF	2088
KZ	400		78 - 79	522 HF	2038
KZ	400	H1 (LTD)	79 - 79	510 HF	2038
ZR	400	Zephyr	97 - 01	631 HS*	687 LS
KX	420		80 - 81	2040	2016
KZ	440		80 - 82	510 HF	2038

* = 2 sets required / 2 jeux pour l'Avant.
Full compound selection, see under "Brake pad 1:1 Drawings" / Sélection complète de composés, voir "1:1 Schémas Plaquettes de frein".

				RECOMMENDED 1xx - 2xx = Scooter Pads 5xx - 9xx = Street, Off Road & Racing Pads 2xxx = Brake Shoes	
KAWASAKI					
KZ	440		83 - 83	540 HF	2038
KZ	440	, LTD	83 - 85	540 HF	2038
KZ	440	C	80 - 81	510 HF	2038
KZ	440	C, Twin	81 - 83	540 HF	2038
KZ	440	H	82 - 84	539 HF	540 HF
KZ	440	LTD	80 - 82	510 HF	2038
EN	450		85 - 90	557 HF	2060
KFX	450	Left	07 - 15	801 SI	592 SI
KFX	450	Right	07 - 15	798 SI	
KLX	450	R	07 - 19	694 SI	790 SI
KX-F	450		06 - 08	694 RSI	790 RSI
KX-F	450	DFI	09 - 21	694 RSI	790 RSI
EN	500		90 - 04	557 HS	2060
EN	500	Vulcan	96 - 97	557 HS	2060
EX	500		87 - 89	597 HF	2038
EX	500		90 - 93	597 HS	2038
EX	500		94 - 96	615 HS	586 LS
EX	500	Ninja	94 - 97	597 HS	586 LS
KH	500		76 - 79	510 HF	
KH	500	H1	74 - 75	503 HF	
KX	500		83 - 85	546 SI	2183
KX	500		86 - 86	546 RSI	586 RSI
KX	500		87 - 88	602 HF	586 SI
KX	500		89 - 93	611 RSI	632 RSI
KX	500		94 - 95	694 RSI	632 RSI
KX	500		96 - 04	694 RSI	604 RSI
GPZ	550		84 - 87	557 HF*	557 HF
KZ	550		81 - 83	540 HF*	540 HF
KZ	550	A1	80 - 80	510 HF	2060
ZR	550	A1, GP	83 - 84	546 HF*	2038
ZR	550	Zephyr	90 - 92	597 HS*	615 LS
ZR	550	Zephyr	93 - 99	597 HS*	687 LS
ZX	550		84 - 89	557 HF*	557 HF
	600	R, Ninja	89 - 96	631 HF*	556 HF
KL	600		84 - 86	546 HF	2183
KLR	600		84 - 86	546 HF	2183
KLR	600	E	85 - 94	546 HF	2183
ZL	600		85 - 91	557 HF	2060
ZL	600	B2 Eliminator	95 - 98	597 HS	2060
ZX	600	Ninja	85 - 87	557 HF*	557 HF
ZX	600	Ninja	90 - 93	631 HS*	597 LS
ZX	600	Ninja R	88 - 97	597 HS*	597 LS
ZX-6R	600	(Ninja ZX6)	93 - 97	631 HS*	687 LS
ZX-6R	600	(Ninja ZX6R)	95 - 97	631 HS*	687 LS
ZX-6R	600	(ZX6)	90 - 93	631 HS*	597 LS
ZX-6R	600	Ninja	98 - 01	686 HS*	687 LS
ZX-6R	600	Ninja	07 - 17	838 HS*	687 LS
ZX-6RR	600	Ninja	03 - 06	788 HS*	687 LS
ZX-6R	636	Ninja	02 - 02	686 HS*	687 LS
ZX-6R	636	Ninja	03 - 06	788 HS*	687 LS
ZX-6R	636	Ninja	13 - 18	894 HS*	834 LS
ZX-6R	636	Ninja KRT ABS	13 - 18	894 HS*	834 LS
	650	R Ninja Left	06 - 08	705 HS	687 LS
	650	R Ninja Right	06 - 08	704 HS	
EN	650	Vulcan S	15 - 19	735 HS	657 LS
EN	650	Vulcan S Cafe	17 - 19	735 HS	657 LS
EN	650	Vulcan S SE	17 - 18	735 HS	657 LS
EX	650	Ninja KRT ABS	17 - 20	627 HS	657 LS
EX	650	Ninja Performance ABS	17 - 20	627 HS*	657 LS
EX	650	Ninja Tourer ABS	17 - 20	627 HS*	657 LS
KLE	650	Versys Left	07 - 14	705 HS	687 LS
KLE	650	Versys Right	07 - 14	704 HS	
KLE	650	Versys	15 - 19	627 HS*	881 LS
KLE	650	Versys LT	15 - 16	627 HS*	881 LS
KLR	650		87 - 07	602 HF	586 SI
KLR	650		95 - 04	705 HS	586 LS
KLR	650		08 - 18	611 HS	638 LS
KLR	650	Camo	08 - 18	611 HS	638 LS

				RECOMMENDED 1xx - 2xx = Scooter Pads 5xx - 9xx = Street, Off Road & Racing Pads 2xxx = Brake Shoes	
KAWASAKI					
KLR	650	Tengai	89 - 92	597 HS	586 LS
KLX	650		93 - 96	694 SI	632 SI
KLX	650	R	93 - 95	694 SI	632 SI
KLX	650	R D1	96 - 96	694 SI	604 SI
KVF	650	Brute Force 4x4 Left	05 - 11	801 SI	
KVF	650	Brute Force 4x4 Right	05 - 11	798 SI	
KVF	650	Brute Force 4x4i Left	05 - 11	611 SI	
KVF	650	Brute Force 4x4i Right	05 - 11	638 SI	
KVF	650	Prairie Left	01 - 03	801 SI	
KVF	650	Prairie Right	01 - 03	798 SI	
KZ	650		78 - 82	510 HF*	512 HF
KZ	650		81 - 84	539 HF	2060
KZ	650	, CSR	81 - 82	540 HF	
KZ	650	C	78 - 79	510 HF*	514 HF
KZ	650	F	81 - 84	539 HF*	2060
W	650		99 - 05	704 HF	2038
Z	650	ABS	17 - 19	627 HS*	657 LS
KFX	700	V-Force Left	04 - 13	801 SI	
KFX	700	V-Force Right	04 - 13	798 SI	
KSV	700	V-Force Left	04 - 11	801 SI	
KSV	700	V-Force Right	04 - 11	798 SI	
KVF	700	Prairie Left	04 - 13	801 SI	
KVF	700	Prairie Right	04 - 13	798 SI	
KZ	700		83 - 88	539 HF*	540 HF
VN	700	Vulcan	85 - 85	557 HF*	2060
ZN	700		84 - 89	557 HF*	557 HF
	750	Vulcan	93 - 94	557 HF	2060
GPZ	750		82 - 82	539 HF	540 HF
GPZ	750		83 - 87	557 HF*	557 HF
GPZ	750	R	85 - 86	557 HF*	557 HF
GPZ	750	T	83 - 85	557 HF*	557 HF
KRF	750	Teryx 4x4 Left	08 - 13	611 SI	
KRF	750	Teryx 4x4 Left	08 - 13	638 SI	
KVF	750	Brute Force 4x4i Left	05 - 15	611 SI	
KVF	750	Brute Force 4x4i Right	05 - 15	638 SI	
KZ	750		83 - 84	557 HF*	2060
KZ	750		84 - 86	539 HF*	540 HF
KZ	750	, LTD	80 - 81	539 HF*	540 HF
KZ	750	, Turbo	84 - 86	557 HF*	557 HF
KZ	750	B	76 - 79	510 HF	514 HF
KZ	750	E	80 - 81	539 HF*	540 HF
KZ	750	Eliminator	88 - 88	557 HF*	557 HF
KZ	750	GT	82 - 85	539 HF*	540 HF
KZ	750	H	72 - 75	503 HF	2091
KZ	750	L	80 - 82	539 HF*	540 HF
KZ	750	L	84 - 86	540 HF*	540 HF
KZ	750	L3	83 - 83	540 HF*	540 HF
KZ	750	LTD	80 - 81	510 HF*	2060
KZ	750	LTD Belt Drive	83 - 85	539 HF*	540 HF
KZ	750	LTD Twin	82 - 82	539 HF*	540 HF
KZ	750	LTD Twin	83 - 85	557 HF	557 HF
KZ	750	M1	82 - 85	540 HF	2060
KZ	750	R1	82 - 82	540 HF*	540 HF
KZ	750	Sp.	83 - 84	539 HF*	540 HF
KZ	750	Y1, N, LTD	82 - 85	539 HF*	540 HF
VN	750	Twin	88 - 88	557 HS*	
VN	750	Vulcan	86 - 94	557 HF*	2060
Z	750		83 - 83	557 HF*	2060
Z	750		84 - 86		540 HF
Z	750	Left	04 - 06	705 HS	687 LS
Z	750	Right	04 - 06	704 HS	
Z	750	, ABS	07 - 12	627 HS*	657 LS
Z	750	R	11 - 12	838 HS*	881 LS
Z	750	S Left	05 - 06	705 HS	687 LS
Z	750	S Right	05 - 06	704 HS	
ZR	750	Zephyr	91 - 95	597 HS*	597 LS
ZR	750	Zephyr Left	96 - 97	705 HS	597 LS
ZR	750	Zephyr Right	96 - 97	704 HS	

* = 2 sets required / 2 jeux pour l'Avant.
Full compound selection, see under "Brake pad 1:1 Drawings" / Sélection complète de composés, voir "1:1 Schémas Plaquettes de frein".

				RECOMMENDED 1xx - 2xx = Scooter Pads 5xx - 9xx = Street, Off Road & Racing Pads 2xxx = Brake Shoes	
KAWASAKI					
ZR-7S	750	Left	01 - 04	705 HS	704 LS
ZR-7S	750	Right	01 - 04	704 HS	
ZX	750	E, GP	83 - 85	557 HF*	557 HF
ZX-7R	750	Ninja	89 - 95	631 HS*	556 LS
ZX-7R	750	Ninja	96 - 03	686 HS*	556 LS
ZX-7RR	750	Ninja	96 - 02	676 HS*	715 LS
	800	Mule Pro FX Left	15 - 17	611 SI	
	800	Mule Pro FX Right	15 - 17	638 SI	
KRF	800	Teryx BEF/CEF/DEF			
		Left	14 - 17	611 SI	
KRF	800	Teryx BEF/CEF/DEF			
		Right	14 - 17	638 SI	
KRT	800	Teryx 4 BEF/CEF/DEF			
		Left	14 - 17	611 SI	
KRT	800	Teryx 4 BEF/CEF/DEF			
		Right	14 - 17	638 SI	
VN	800	Vulcan Classic	96 - 06	705 HS	2060
VN	800	Vulcan Drifter	99 - 03	705 HS	704 LS
VN	800	Vulcan,Classic	95 - 97	557 HS	2060
W	800		11 - 16	704 HS	
W	800	Cafe	19 - 19	704 HS	
W	800	Street	19 - 19	704 HS	
Z	800		13 - 16	782 HS*	881 LS
Z	800	ABS	13 - 16	782 HS*	881 LS
Z	800	e	13 - 16	627 HS*	881 LS
Z	800	e ABS	13 - 16	782 HS*	881 LS
KZ	900		76 - 76	510 HF*	514 HF
KZ	900		76 - 77	510 HF	2091
KZ	900	A	76 - 77	510 HF*	2091
VN	900	Vulcan Classic	06 - 16	705 HS	886 LS
VN	900	Vulcan Classic SE	11 - 16	705 HS	886 LS
VN	900	Vulcan Custom	07 - 16	705 HS	886 LS
Z	900		17 - 21	782 HS*	881 LS
Z	900	RS	18 - 21	806 HS*	657 LS
Z	900	RS Cafe	18 - 21	806 HS*	657 LS
ZL	900	Eliminator	85 - 86	557 HF*	557 HF
ZX	900		83 - 84	557 HF*	557 HF
ZX-9R	900	Ninja	94 - 95	631 HS*	687 LS
ZX-9R	900	Ninja	96 - 01	686 HS*	687 LS
ZX-9R	900	Ninja	02 - 03	782 HS*	687 LS
	1000	Ninja sx	20 - 20	806 SP*	687 LS
KLE	1000	Versys	12 - 18	631 SP*	657 LS
KLE	1000	Versys ABS	15 - 18	631 SP*	657 LS
KLE	1000	Versys ABS	19 - 20	806 SP*	657 LS
KLE	1000	Versys LT	15 - 16	631 SP*	657 LS
KLE	1000	Versys SE	19 - 20	806 SP*	657 LS
KLV	1000	Left	04 - 07	705 HS	657 LS
KLV	1000	Right	04 - 07	704 HS	
KZ	1000		76 - 81	510 HF*	512 HF
KZ	1000		87 - 01	539 HF*	540 HF
KZ	1000	F1	80 - 82	539 HF*	512 HF
KZ	1000	GL	80 - 82	510 HF*	512 HF
KZ	1000	H1	80 - 83	510 HF*	512 HF
KZ	1000	J	79 - 83	539 HF*	540 HF
KZ	1000	K, M, CSR	81 - 84	539 HF*	540 HF
KZ	1000	LTD	81 - 84	539 HF*	540 HF
KZ	1000	MKII	79 - 80	539 HF*	512 HF
KZ	1000	Police	82 - 01	539 HF	540 HF
KZ	1000	Police Left	02 - 03	705 HS	886 LS
KZ	1000	Police Right	02 - 03	704 HS	
KZ	1000	R Ninja	86 - 88	557 HF*	557 HF
KZ	1000	RE1, R2	82 - 84	540 HF*	540 HF
KZ	1000	ST	79 - 81	539 HF*	512 HF
Z	1000	ABS	15 - 19	806 HS*	687 LS
Z	1000	H2	20 - 20	900 SP*	657 LS
Z	1000	Ninja	14 - 16	806 HS*	687 LS
Z	1000	SE	14 - 16	806 HS*	687 LS
Z	1000	SX	11 - 19	806 HS*	687 LS

				RECOMMENDED 1xx - 2xx = Scooter Pads 5xx - 9xx = Street, Off Road & Racing Pads 2xxx = Brake Shoes	
KAWASAKI					
ZG	1000	Concours	86 - 93	557 HF*	557 HF
ZG	1000	Concours	94 - 03	597 HS*	557 LS
ZL	1000		86 - 87	557 HF*	557 HF
ZX	1000	H2 Carbon Ninja	17 - 20	841 SP*	730 LS
ZX	1000	H2 Ninja	15 - 21	841 SP*	730 LS
ZX	1000	H2 SX	18 - 19	806 HS*	611 LS
ZX	1000	H2 SX SE	18 - 19	806 HS*	611 LS
ZX	1000	H2 SX SE+	19 - 21	841 SP*	611 LS
ZX	1000	H2R Ninja	15 - 20	841 SP*	730 LS
ZX-10	1000		88 - 90	597 HS*	597 LS
ZX-10R	1000	Ninja	04 - 07	788 HS*	687 LS
ZX-10R	1000	Ninja	08 - 10	806 SP*	687 LS
ZX-10R	1000	Ninja	11 - 15	806 SP*	834 LS
ZX-10R	1000	Ninja	16 - 20	841 SP*	834 LS
ZX-10R	1000	Ninja ABS	12 - 15	806 SP*	834 LS
ZX-10R	1000	Ninja KRT	16 - 18	841 SP*	834 LS
ZX-10R	1000	Ninja SE	18 - 20	841 SP*	834 LS
ZX-10RR	1000	Ninja	17 - 20	841 SP*	834 LS
GPZ	1100		81 - 82	539 HF*	540 HF
GPZ	1100		83 - 86	557 HF*	557 HF
GPZ	1100	(ZX 1100) Left	95 - 99	705 HS	687 LS
GPZ	1100	(ZX 1100) Right	95 - 99	704 HS	
KZ	1100	, Spectre	82 - 83	539 HF*	540 HF
KZ	1100	GP	81 - 81	539 HF	540 HF
KZ	1100	GP	83 - 86	557 HF*	557 HF
KZ	1100	L1, LTD	83 - 83	539 HF*	540 HF
KZ	1100	R, LTD	84 - 84	557 HF*	557 HF
ZN	1100	LTD	84 - 84	557 HF*	557 HF
ZR	1100	Zephyr	92 - 95	631 HS*	597 LS
ZRX	1100		96 - 00	686 HS*	556 LS
ZX	1100		93 - 97	631 HS*	556 LS
ZX	1100	GP	83 - 83	557 HF*	557 HF
ZZR	1100		90 - 93	631 HS*	597 LS
ZZR	1100		94 - 01	631 HS*	556 LS
ZG	1200	Voyager XII	86 - 93	557 HS*	557 LS
ZRX	1200		01 - 04	686 HS*	556 LS
ZRX	1200	R	01 - 08	686 HS*	556 LS
ZRX	1200	S	01 - 07	686 HS*	556 LS
ZX-12R	1200	Ninja	00 - 03	686 HS*	556 LS
ZX-12R	1200	Ninja	04 - 06	788 HS*	556 LS
ZZR	1200		02 - 04	631 HS*	556 LS
KZ	1300		79 - 81	530 HF*	512 HF
ZN	1300		83 - 84	557 HF*	557 HF
ZN	1300	Voy.	85 - 86	557 HF*	557 HF
ZG	1400	Concours	07 - 10	838 HS*	715 LS
ZX-14R	1400	Ninja	06 - 15	838 HS*	715 LS
ZX-14R	1400	Ninja ABS	07 - 15	838 HS*	715 LS
ZX-14R	1400	SE	16 - 18	841 HS*	715 LS
VN	1500	Mean Streak	02 - 03	686 HS	886 LS
VN	1500	Vulcan	87 - 92	557 HS	557 LS
VN	1500	Vulcan Classic	97 - 99	705 HS	557 LS
VN	1500	Vulcan Classic Fi	00 - 04	705 HS	886 LS
VN	1500	Vulcan Drifter	99 - 02	705 HS	704 LS
VN	1500	Vulcan Nomad Left	98 - 01	705 HS	557 LS
VN	1500	Vulcan Nomad Right	98 - 01	704 HS	
VN	1500	Vulcan Nomad Fi Left	00 - 04	705 HS	886 LS
VN	1500	Vulcan Nomad Fi Right	00 - 04	704 HS	
VN	1500	Vulcan, SE	87 - 92	557 HS	557 LS
VN	1600	Mean Streak	04 - 04	686 HS*	886 LS
VN	1600	Mean Streak	05 - 05	788 HS*	886 LS
VN	1600	Nomad Left	05 - 05	705 HS	886 LS
VN	1600	Nomad Right	05 - 05	704 HS	
VN	1600	Vulcan Classic Left	03 - 08	705 HS	886 LS
VN	1600	Vulcan Classic Right	03 - 08	704 HS	
VN	1700	Voyager Vaquero Left	09 - 14	705 HS	886 LS
VN	1700	Voyager Vaquero Right	09 - 14	704 HS	
VN	1700	Vulcan Classic Left	09 - 14	705 HS	886 LS
VN	1700	Vulcan Classic Right	09 - 14	704 HS	

* = 2 sets required / 2 jeux pour l'Avant.
Full compound selection, see under "Brake pad 1:1 Drawings" / Sélection complète de composés, voir "1:1 Schémas Plaquettes de frein".

				RECOMMENDED 1xx - 2xx = Scooter Pads 5xx - 9xx = Street, Off Road & Racing Pads 2xxx = Brake Shoes	
KAWASAKI					
VN	1700	Vulcan Nomad Left	09 - 16	705 HS	886 LS
VN	1700	Vulcan Nomad Right	09 - 16	704 HS	
VN	1700	Vulcan Voyager	09 - 16	631 HS*	886 LS
VN	2000	Vulcan	04 - 10	631 HS*	886 LS
KEEWAY					
	50	Flash	07 - 12	101 HF	2028
	50	Flash Electric	10 - 12	141 HF	2028
	50	Focus	06 - 15	141 HF	
	50	Hurricane	06 - 16	101 HF	2028
	50	Matrix	06 - 15	141 HF	2028
	50	Matrix Electric	10 - 15	141 HF	
	50	Matrix Racing Sport	10 - 16	141 HF	
F-NKD	50		10 - 11	141 HF	2028
RY8	50		07 - 09	141 HF	2028
RY8	50		10 - 16	141 HF	200 HF
TX	50	SM	10 - 12	173 HF	
	90	Hurricane	06 - 09	101 HF	
	100	Partner	06 - 10	119 HF	
	110	Partner	06 - 07	119 HF	
	125	Arn	06 - 08	123 CT	
	125	Cityblade	17 - 19	232 HF	152 HF
	125	Enduro	07 - 08	774 HF	519 HF
	125	Focus	06 - 08	141 CT	
	125	Logik	17 - 19	232 HF	
	125	Matrix	06 - 08	141 CT	
	125	Matrix Racing Sport	10 - 16	141 CT	
	125	Speed	06 - 12	132 CT	119 CT
	125	Superlight	06 - 16	713 HF	
	125	Superlight	17 - 19	961 HF	
	125	X-Ray	07 - 08	774 HF	519 HF
TX	125	SM	10 - 16	780 HF	
	150	Arn	06 - 08	123 CT	
	150	Focus	06 - 09	141 CT	
	150	Matrix	06 - 08	141 CT	
	150	Matrix Racing Sport	10 - 12	141 CT	
	150	Speed	06 - 09	132 CT	119 CT
	150	Superlight	06 - 16	713 HF	
	250	Land Cruiser	06 - 14	713 HF	
	250	Supershadow	06 - 09	691 HF	
KTM					
		Freeride Electric	12 - 14	885 RSI	872 RSI
E-SM		Freeride	15 - 16	885 RSI	872 RSI
E-SX		Freeride	15 - 16	885 RSI	872 RSI
E-XC		Freeride	15 - 18	885 RSI	872 RSI
SX-E		5	19 - 21	794 RSI	794 RSI
SM	50	Supermoto	06 - 06	794 RSI	794 RSI
SX	50		09 - 21	794 RSI	794 RSI
SX	50	Adventure	98 - 03	2074	2074
SX	50	Mini	09 - 21	794 RSI	794 RSI
SX	50	Pro Junior LC	02 - 05	794 RSI	2074
SX	50	Pro Senior LC	02 - 03	794 RSI	2074
SX	50	Pro Senior LC	04 - 09	794 RSI	794 RSI
SX	50	Senior Adventure	04 - 07	794 RSI	2074
SX	60		99 - 99	559 RSI	
SX	65		00 - 01	559 RSI	574 RSI
SX	65		02 - 03	783 RSI	574 RSI
SX	65		04 - 08	783 RSI	794 RSI
SX	65		09 - 21	783 RSI	783 RSI
SX	85		04 - 10	783 RSI	783 RSI
SX	85		11 - 11	783 RSI	872 RSI
SX	85		12 - 20	885 RSI	872 RSI
SX	85		21 - 21	671 RSI	791 RSI
SX	85	(19"/16" wheels)	13 - 20	885 RSI	872 RSI
SX	85	(19"/16" wheels)	21 - 21	671 RSI	791 RSI
	125		83 - 83	2120	2120
	125	Duke	11 - 19	877 HS	675 LS

				RECOMMENDED 1xx - 2xx = Scooter Pads 5xx - 9xx = Street, Off Road & Racing Pads 2xxx = Brake Shoes	
KTM					
	125	Sting	99 - 99	566 HF	675 HF
	125	SuperMoto	00 - 03	671 HF	675 HF
EXC	125		90 - 90	621 HF	621 HF
EXC	125	Enduro	99 - 03	671 SI	675 SI
EXC	125	Enduro	04 - 15	671 SI	791 SI
EXE	125		00 - 00	671 HF	675 HF
GS	125		83 - 83	2122	2120
GS	125		84 - 85	2122	2122
GS	125		88 - 88	621 HF	621 HF
GS	125		89 - 90	546 SI	586 SI
GS	125		92 - 97	671 SI	586 SI
LC	125		85 - 85	519 SI	
LC	125		86 - 86	519 SI	519 SI
LC2	125		99 - 99	671 HF	675 HF
LL	125		83 - 83	2122	2120
MX	125		84 - 84	2122	2122
MX	125		85 - 85	519 SI	2122
MX	125		86 - 86	519 SI	519 SI
MX	125		88 - 88	621 HF	621 HF
MX	125		89 - 90	546 SI	692 SI
MX	125		92 - 93	671 SI	692 SI
RC	125		14 - 19	877 HS	675 LS
SX	125		96 - 03	671 RSI	675 RSI
SX	125		04 - 21	671 RSI	791 RSI
XC	125		85 - 85	519 SI	2122
XC	125		86 - 89	519 SI	519 SI
SX	144		07 - 08	671 RSI	791 RSI
EXC	150	TPI	20 - 21	671 SI	791 SI
SX	150		09 - 21	671 RSI	791 RSI
XC	150		10 - 14	671 RSI	791 RSI
	175		79 - 82	2120	2121
	200	Duke	12 - 17	877 HS	675 LS
EXC	200	Enduro	99 - 03	671 SI	675 SI
EXC	200	Enduro	04 - 16	671 SI	791 SI
RC	200		14 - 19	877 HS	675 LS
SX	200		03 - 04	671 RSI	791 RSI
XC	200		06 - 09	671 RSI	791 RSI
XC-W	200		06 - 16	671 RSI	791 RSI
	250	Baja	86 - 89	519 SI	2122
	250	Country,Baja	85 - 85	519 SI	2122
	250	Cross	80 - 81	2120	2120
	250	Cross	82 - 82	2121	2121
	250	Cross	83 - 83	2118	2121
	250	Duke	14 - 15	877 HS	675 LS
	250	Freeride R	14 - 19	885 RSI	872 RSI
	250	GS,EXC,Enduro Models	91 - 91	621 HF	586 SI
EXC	250		90 - 90	621 HF	621 HF
EXC	250	Enduro	99 - 03	671 SI	675 SI
EXC	250	Enduro	04 - 08	671 SI	791 SI
EXC	250	Enduro 4T	99 - 03	671 SI	675 SI
EXC	250	Enduro 4T	04 - 06	671 SI	791 SI
EXC	250	TPI	18 - 21	671 SI	791 SI
EXC-F	250	Enduro	07 - 19	671 SI	791 SI
GS	250		83 - 85	2122	2122
GS	250		88 - 88	621 HF	621 HF
GS	250		89 - 90	546 SI	586 SI
LC	250		85 - 85	519 SI	
LC	250		86 - 86	519 SI	519 SI
MC	250		83 - 84	519 SI	519 SI
MX	250		84 - 84	2122	2122
MX	250		85 - 85	519 SI	2122
MX	250		88 - 88	621 HF	621 HF
MX	250		89 - 90	546 SI	692 SI
MX	250		92 - 93	671 SI	692 SI
MX	250	VC, Enduro	87 - 90	601 HF	601 HF
RC	250		14 - 15	877 HS	675 LS
SX	250		96 - 02	671 RSI	675 RSI
SX	250		03 - 21	671 RSI	791 RSI

* = 2 sets required / 2 jeux pour l'Avant.
Full compound selection, see under "Brake pad 1:1 Drawings" / Sélection complète de composés, voir "1:1 Schémas Plaquettes de frein".

RECOMMENDED
1xx - 2xx = Scooter Pads
5xx - 9xx = Street, Off Road & Racing Pads
2xxx = Brake Shoes

KTM					
SX-F	250		06 - 21	671 RSI	791 RSI
XC	250		85 - 85	519 SI	
XC	250		86 - 89	519 SI	519 SI
XC	250		06 - 14	671 RSI	791 RSI
XC-W	250		08 - 17	671 RSI	791 RSI
EXC	300		90 - 90	621 HF	621 HF
EXC	300		93 - 96	671 SI	586 SI
EXC	300	Enduro	99 - 03	671 SI	675 SI
EXC	300	Enduro	04 - 08	671 SI	791 SI
EXC	300	TPI	18 - 21	671 SI	791 SI
GS	300		85 - 85	2122	2122
MX	300		85 - 89		2122
MX	300		90 - 90	546 SI	586 SI
MX	300		92 - 92	671 SI	586 SI
XC	300		85 - 85	519 SI	2122
XC	300		86 - 90	519 SI	519 SI
XC	300		06 - 14	671 RSI	791 RSI
XC	300	(Drum vers.)	85 - 85	2122	2122
XC-W	300		06 - 08	671 RSI	791 RSI
	350	Country Cross	85 - 85	519 SI	2122
	350	Freeride	12 - 17	885 RSI	872 RSI
	350	GS	83 - 85	519 SI	2121
	350	GS (Drum vers.)	83 - 85	2122	2122
EXC	350		87 - 87	601 HF	601 HF
EXC	350		88 - 90	621 HF	621 HF
EXC-F	350		11 - 21	671 SI	791 SI
GS	350		87 - 87	601 HF	601 HF
GS	350		88 - 92	621 HF	621 HF
GS4	350	500 K4	82 - 83	519 SI	
K4	350	500 K4	82 - 83	519 SI	
LC4	350		92 - 95	546 SI	586 SI
MX	350		87 - 87	601 HF	601 HF
MX	350		88 - 88	621 HF	621 HF
SX-F	350		11 - 21	671 RSI	791 RSI
XC	350	, MC	81 - 83	519 SI	
XC-F	350		12 - 17	671 RSI	791 RSI
XCF-W	350		13 - 17	671 RSI	791 RSI
MX	360		96 - 97	671 SI	675 SI
SX	360		96 - 97	671 RSI	675 RSI
XC	360		96 - 97	671 SI	675 SI
EXC	380	Enduro	99 - 99	671 SI	675 SI
MX	380		98 - 98	671 SI	675 SI
SX	380		98 - 02	671 RSI	675 RSI
XC	380		98 - 03	671 SI	675 SI
	390	Adventure	20 - 20	877 HS	675 LS
	390	Duke	13 - 20	877 HS	675 LS
	390	GS	83 - 83	519 SI	2121
	390	GS (Drum vers.)	83 - 83	2122	2122
RC	390		14 - 20	877 HS	675 LS
XC	390	, MC	81 - 83	519 SI	
	400	Enduro	87 - 90	601 HF	601 HF
EXC	400	Racing	00 - 03	671 SI	675 SI
EXC	400	Racing	04 - 07	671 SI	791 SI
LC4	400		93 - 02	671 SI	586 SI
LC4-E	400	Enduro	99 - 02	671 SI	675 SI
SC	400		99 - 00	671 SI	675 SI
SX	400	Racing	00 - 02	671 RSI	675 RSI
SXC	400	Tiainen Replica	99 - 00	671 SI	675 SI
XC-W	400		07 - 10	671 RSI	791 RSI
GS	420		84 - 87	2122	2122
XC	420	, MC	81 - 83	519 SI	
	450	Rally	11 - 17	674 SI	675 SI
	450	Rally	19 - 19	674 SI	791 SI
EXC-F	450	Racing	04 - 19	671 SI	791 SI
SX	450	ATV	08 - 10	866 RSI*	867 RSI
SX	450	SM Factory Replica	04 - 07	566 RSI	791 RSI
SX	450	SMR	04 - 06	842 RSI	791 RSI
SX	450	SMR	07 - 12	843 RSI	791 RSI

RECOMMENDED
1xx - 2xx = Scooter Pads
5xx - 9xx = Street, Off Road & Racing Pads
2xxx = Brake Shoes

KTM					
SX	450	SMR	13 - 15	841 RST	791 RSI
SX-F	450		03 - 21	671 RSI	791 RSI
XC	450	ATV	08 - 10	866 SI*	867 SI
XC-F	450		06 - 17	671 RSI	791 RSI
XCF-W	450		07 - 15	671 RSI	791 RSI
MC	495	Leleu	82 - 83	519 SI	2121
MX	495		84 - 84	2122	2122
MX	495	Leleu	82 - 83	519 SI	2121
	500	Cross	82 - 82	2118	2121
EXC-F	500		12 - 21	671 SI	791 SI
GS	500	500 K4 Enduro	83 - 83	519 SI	2121
LC	500		85 - 85	519 SI	2122
LC	500		86 - 89	519 SI	519 SI
MX	500		83 - 84	2122	2122
MX	500		85 - 85	519 SI	2122
MX	500		86 - 86	519 SI	519 SI
MX	500		87 - 87	601 HF	601 HF
MX	500		88 - 88	621 HF	621 HF
MX	500		89 - 91	546 SI	692 SI
MX	500		92 - 93	671 SI	692 SI
XC	500	, MC	81 - 83	519 SI	
XCF-W	500		12 - 17	671 RSI	791 RSI
SX	505	ATV	08 - 12	866 RSI*	867 RSI
SX	505	Racing	07 - 09	671 RSI	791 RSI
XC	505	ATV	08 - 12	866 SI*	867 SI
XC-F	505		08 - 09	671 RSI	791 RSI
EXC	520	Racing	00 - 02	671 SI	675 SI
SX-F	520	Racing	00 - 02	671 RSI	675 RSI
EXC	525	Racing	03 - 03	671 SI	675 SI
EXC	525	Racing	04 - 06	671 SI	791 SI
SX	525	SMR	04 - 07	842 RSI	791 RSI
SX-F	525	Racing	03 - 03	671 RSI	675 RSI
SX-F	525	Racing	04 - 06	671 RSI	791 RSI
XC-F	525		07 - 07	671 RSI	791 RSI
XCF-W	525		07 - 07	671 RSI	791 RSI
EXC	530	Racing	08 - 11	671 SI	791 SI
XCF-W	530		09 - 11	671 RSI	791 RSI
SXC	540	Tiainen Replica	99 - 00	671 SI	675 SI
LC4	550		87 - 89	601 HF	601 HF
MX	550		87 - 90	601 HF	601 HF
SX	560	SMR	06 - 07	843 RSI	791 RSI
	600	Duke	93 - 94	566 HF	
4T	600	Enduro	84 - 86	519 SI	
EXC	600		87 - 87	601 HF	601 HF
EXC	600		88 - 88	621 HF	621 HF
GS	600		84 - 84	2122	2122
GS	600		85 - 85	519 SI	2122
LC4	600		88 - 91	601 HF	601 HF
LC4	600	Enduro	88 - 91	601 HF	601 HF
LC4	600	Six Days	92 - 92	671 SI	586 SI
MC	600		88 - 88	601 HF	601 HF
MX	600		87 - 87	601 HF	601 HF
MX	600		88 - 89	621 HF	621 HF
XC	600	Cross	85 - 85	519 SI	
XCE	600	Cross	85 - 85	519 SI	
	620	Duke	96 - 98	566 HF	519 HF
LC4	620	Competition	99 - 02	671 SI	675 SI
LC4	620	Competition SuperMoto	00 - 01	671 HF	675 HF
LC4	620	RXC	95 - 95	671 SI	675 SI
LC4	620	Supercompetition	01 - 01	671 HF	675 HF
SC	620		99 - 00	671 SI	675 SI
SX	620		95 - 99	671 RSI	675 RSI
LC4	625	SC Supermoto	02 - 04	671 HF	675 HF
SMC	625		05 - 06	706 HF	675 HF
SXC	625		03 - 04	671 HF	675 HF
	640	Duke	99 - 02	566 HF	519 HF
	640	Duke	03 - 06	706 HF	675 HF

* = 2 sets required / 2 jeux pour l'Avant.
Full compound selection, see under "Brake pad 1:1 Drawings" / Sélection complète de composés, voir "1:1 Schémas Plaquettes de frein".

				RECOMMENDED 1xx - 2xx = Scooter Pads 5xx - 9xx = Street, Off Road & Racing Pads 2xxx = Brake Shoes	
KTM					
LC4	640	Adventure	99 - 04	671 HF	675 HF
LC4	640	Adventure	05 - 07	674 HF	675 HF
LC4	640	Supermoto	03 - 03	566 HF	675 HF
LC4	640	Supermoto	04 - 04	706 HF	675 HF
LC4-E	640	Enduro	99 - 04	671 HF	675 HF
LC4-E	640	Supermoto	99 - 02	671 HF	675 HF
LC4	660	Rallye	01 - 03	671 HF	675 HF
LC4	660	SM Factory Replica	02 - 02	566 RSI	675 RSI
SMC	660	Supermoto	03 - 03	566 HF	675 HF
SMC	660	Supermoto	04 - 07	706 HF	675 HF
	690	Duke	08 - 11	762 HS	675 LS
	690	Duke ABS	12 - 19	706 HS	675 LS
	690	Duke R	10 - 11	762 HS	675 LS
	690	Duke R	14 - 17	841 HS	675 LS
	690	Enduro	08 - 14	674 HS	675 LS
	690	Enduro R	09 - 21	674 HS	675 LS
	690	SM	07 - 11	762 HS	675 LS
	690	SMC	08 - 10	762 HS	675 LS
	690	SMC R	14 - 20	762 HS	675 LS
	690	Supermoto R	08 - 09	762 HS	675 LS
	790	Adventure	19 - 20	706 HS*	671 LS
	790	Adventure R	19 - 20	706 HS*	671 LS
	790	Adventure R Rally	20 - 20	706 HS*	671 LS
	790	Duke	18 - 20	706 HS*	675 LS
	890	Duke R	20 - 20	901 SP*	675 LS
	950	R Superenduro	06 - 08	674 HS	671 LS
	950	SM	05 - 07	762 HS*	671 LS
	950	SM R	07 - 09	762 HS*	671 LS
LC8	950	Adventure	02 - 07	674 HS*	671 LS
	990	Adventure R	10 - 12	674 HS*	671 LS
	990	Adventure, Adventure S, ABS	06 - 11	674 HS	671 LS
	990	Super Duke	04 - 13	762 HS*	675 LS
	990	Super Duke R	09 - 13	762 HS*	675 LS
	990	Supermoto	07 - 11	762 HS*	671 LS
	990	Supermoto R	10 - 10	841 HS*	671 LS
	990	Supermoto T	09 - 13	762 HS*	671 LS
	1050	Adventure	15 - 16	706 SP*	671 LS
	1090	Super Adventure	17 - 19	706 SP*	671 LS
	1090	Super Adventure R	17 - 20	706 SP*	671 LS
	1190	Adventure	13 - 16	706 SP*	671 LS
RC8	1190		08 - 11	841 SP*	730 LS
RC8	1190	R	09 - 15	841 SP*	730 LS
RC8	1190	R Track	11 - 15	841 SP*	730 LS
	1290	Super Adventure	15 - 16	706 SP*	671 LS
	1290	Super Adventure R	17 - 20	706 SP*	671 LS
	1290	Super Adventure S	17 - 20	706 SP*	671 LS
	1290	Super Adventure T	17 - 19	706 SP*	671 LS
	1290	Super Duke GT	16 - 20	901 HS*	730 LS
	1290	Super Duke R	14 - 20	841 HS*	730 LS
	1290	Superduke R Black	20 - 20	841 SP*	730 LS
KYMCO					
	50	Agility	05 - 08	163 HF	2012
	50	Agility (4T) R10	06 - 14	163 HF	2012
	50	Agility (4T) R12	06 - 15	163 HF	2012
	50	Agility (4T) R16	06 - 15	154 HF	2203
	50	Agility Basic	07 - 07	2012	2012
	50	MXU	05 - 10	2012*	749 HF
	50	People	99 - 06	154 HF	2203
	50	Super-8	08 - 16	154 HF	2203
	50	Super-9	00 - 01	144 HF	
	50	Super-9 A/C	02 - 07	119 HF	
	50	Super-9 L/C	02 - 07	119 HF	154 HF
CX	50	Curio Super	94 - 97	121 HF	2057
RS	50	Agility Naked	10 - 15	163 HF	
ZX	50	Super Fever	02 - 06	144 HF	
	125	Agility	06 - 11	163 CT	2012

				RECOMMENDED 1xx - 2xx = Scooter Pads 5xx - 9xx = Street, Off Road & Racing Pads 2xxx = Brake Shoes	
KYMCO					
	125	Agility 16+	14 - 16	154 CT	119 CT
	125	Agility City	11 - 17	163 CT	113 CT
	125	Downtown i	10 - 14	183 CT	204 CT
	125	K-Pipe	13 - 15	688 HF	
	125	Like	11 - 16	163 CT	
	125	New Downtown	16 - 17	159 CT	204 CT
	125	People	01 - 09	154 CT	2203
	125	People GTi	12 - 15	159 CT	204 CT
	125	People One i	14 - 16	154 CT	
	125	Super Dink	10 - 15	183 CT	204 CT
	125	Super-8	08 - 15	154 CT	
	125	Super-9	00 - 01	144 CT	154 CT
	125	X-Town CT	20 - 20	159 CT	204 CT
S	125	People	05 - 08	154 CT	195 CT
	150	MXU	05 - 17	2012*	749 HF
	150	People	01 - 06	154 CT	2203
	150	Quannon	10 - 14	119 CT	119 CT
	200	Agility 16+	14 - 17	154 CT	119 CT
	200	Agility R16	11 - 15	154 CT	119 CT
	200	Downtown i	10 - 15	183 CT	204 CT
	200	Like i	10 - 16	119 CT	119 CT
	200	People GTi	12 - 15	159 CT	204 CT
S	200	People	05 - 07	154 CT	195 CT
	250	MXU	06 - 14	810 SI*	775 SI
	250	People	03 - 12	119 MS	
	250	Super-9	00 - 05	144 CT	154 CT
	250	Urban Quad	06 - 06	810 SI*	775 SI
	250	Venox	01 - 14	627 HF	627 HF
	250	Xciting	04 - 05	183 MS	183 MS
	250	Xciting	06 - 09	183 MS	195 MS
KXR	250		04 - 14	810 SI*	775 SI
	300	Agility+	20 - 20	204 MS	204 MS
	300	Downtown i	10 - 15	183 MS	204 MS
	300	Maxxer	06 - 13	810 SI*	775 SI
	300	Maxxer Supermoto	15 - 15	810 SI*	775 SI
	300	MXU	06 - 17	810 SI*	810 SI*
	300	People Gti	10 - 13	183 MS	
	300	People Gti	12 - 15	159 MS	204 MS
	300	People S	20 - 20	159 MS	204 MS
	300	Xciting Ri	08 - 14	183 MS*	195 MS
	300	X-Town CT	20 - 20	159 MS	204 MS
	350	New Downtown	16 - 17	159 MS	204 MS
	400	Maxxer	08 - 10	822 ATS*	822 ATS
	400	Maxxer (Parking Brake)	08 - 10	921 HF	
	400	MXU	08 - 11	822 ATS*	822 ATS
	400	MXU (Parking Brake)	08 - 11	921 HF	
	400	Xciting i	12 - 14	214 MS*	212 MS
	450	i Maxxer	10 - 14	822 ATS*	822 ATS
	450	i Maxxer (Parking Brake)	10 - 14	921 HF	
	450	i MXU	11 - 14	822 ATS*	822 ATS
	450	i MXU (Parking Brake)	11 - 14	921 HF	
	500	MXU	06 - 08	810 SI*	810 SI*
	500	MXU	09 - 14	945 SI*	
	500	MXU DX	11 - 13	945 SI*	
	500	UXV 4x4	08 - 14	810 SI*	810 SI
	500	Xciting	04 - 15	183 MS*	212 MS
	500	Xciting i Evo ABS	11 - 13	183 MS*	212 MS
	500	Xciting R ABS	09 - 13	183 MS*	212 MS
	550	MXU	12 - 20	945 SI*	810 SI
	700	MXU	13 - 20	945 SI*	810 SI
UXV	700		14 - 16	945 SI*	
LAVERDA					
HP	125	Quasar	04 - 04		758 ATS
HP	180	Quasar	04 - 04		758 ATS
GS	350	Lesmo	86 - 89	519 HF*	519 HF
	400	Quasar 4x4	04 - 04	758 ATS*	758 ATS

* = 2 sets required / 2 jeux pour l'Avant.
Full compound selection, see under "Brake pad 1:1 Drawings" / Sélection complète de composés, voir "1:1 Schémas Plaquettes de frein".

				RECOMMENDED 1xx - 2xx = Scooter Pads 5xx - 9xx = Street, Off Road & Racing Pads 2xxx = Brake Shoes	
LAVERDA					
	500	Alpino, S	77 - 83	519 HF*	519 HF
	500	Quasar 4x4	04 - 04	758 ATS*	758 ATS
	500	Quasar 4x4 C	04 - 04	758 ATS*	758 ATS
OR	600	Atlas	86 - 90	594 HF	519 HF
SFC	600		86 - 89	506 HF*	506 HF
	650		92 - 92	566 HF*	519 HF
	650	V-Six	93 - 93	506 HS*	506 LS
	668	668	96 - 97	566 HF	519 HF
	668	Ghost, Diamante	97 - 97	566 HF*	519 HF
	700	El Cid	90 - 90	546 HF	586 HF
	750	Cup	98 - 01	566 HF*	519 HF
	750	Diamante	97 - 01	566 HF*	519 HF
	750	Ghost Strike	97 - 01	566 HF*	519 HF
	750	S Formula	97 - 01	566 HF*	519 HF
	750	S, S Carenata	97 - 01	566 HF*	519 HF
	750	Sport	99 - 01	566 HF*	519 HF
	750	Strike/Black Strike	99 - 01	566 HF*	519 HF
	750	T8	98 - 01	566 HF*	519 HF
TTS	800		99 - 99	566 HF*	730 HF
	1000	Jota	76 - 79	506 HF*	506 HF
3C	1000	3CE, 3CL	74 - 75	506 HF*	506 HF
JOTA	1000		95 - 95	566 HF	519 HF
RGS	1000		83 - 83	506 HF*	506 HF
RGS	1000	Jota	86 - 86	506 HF*	506 HF
SFC	1000		85 - 86	506 HF*	506 HF
SFC	1000		04 - 04	762 HS*	730 LS
TGA	1000	Executive	84 - 84	506 HF*	506 HF
	1200	Mirage	78 - 80	506 HF*	506 HF
LEM					
	50	CX2, CX3, RX2, RX3	03 - 06	794 RSI	794 RSI
	50	R2, R3, R3 XC	03 - 06	794 RSI	794 RSI
RX	65		05 - 10	794 RSI	794 RSI
RX	150		11 - 11		794 RSI
MAICO					
		all models	89 - 89	621 HF	621 HF
		all models	91 - 91	621 HF	586 SI
	250	Motocross/Enduro	99 - 01	671 SI	675 SI
GM	250	LC	85 - 85	519 SI	
GM	250	Star	86 - 86	581 HF	581 HF
GP	250	all models	89 - 89	621 HF	621 HF
GP	250	E	87 - 87	581 HF	581 HF
GP	250	Motocross	87 - 87	581 HF	581 HF
MD	250		83 - 85	519 SI	519 SI
	350		93 - 95	621 HF	621 HF
GP	400	all models	89 - 89	621 HF	621 HF
GP	400	E	87 - 88	581 HF	581 HF
GP	400	Motocross	87 - 88	581 HF	581 HF
	500		93 - 94	621 HF	621 HF
	500	Motocross/Enduro	99 - 99	671 SI	675 SI
	500	Supermotard	99 - 99	671 HF	675 HF
GM	500	LC	85 - 86	519 SI	
GM	500	Star	86 - 86	581 HF	581 HF
GP	500	all models	89 - 89	621 HF	621 HF
GP	500	E	87 - 87	581 HF	581 HF
GP	500	Motocross	87 - 87	581 HF	581 HF
GP	550		87 - 87	581 HF	581 HF
MALAGUTI					
	50	AJP Caliper			
		incl. pin/spring	91 - 19	188 HF	
	50	Centro	93 - 96	109 HF	2012
	50	Chopper 25, 40, 80,			
		Fifty	83 - 83	532 HF	
	50	Chopper HF,			
		Watercooled	83 - 83	532 HF	
	50	Enduro	85 - 87	519 HF	

				RECOMMENDED 1xx - 2xx = Scooter Pads 5xx - 9xx = Street, Off Road & Racing Pads 2xxx = Brake Shoes	
MALAGUTI					
	50	Enduro Dune	87 - 88	132 HF	132 HF
	50	Evolution	91 - 91	574 HF	
	50	Fifty Evolution	91 - 91	559 HF	
	50	Fifty Full, CX, Top	85 - 85	595 HF	
	50	Fifty Mistral	90 - 95	595 HF	
	50	Yesterday	97 - 02	123 HF	2012
CH	50		86 - 86	595 HF	
CR-1	50	Crosser	95 - 96	132 HF	
EL	50	Crosser	97 - 00	123 HF	
ES	50	Dune	89 - 89	574 HF	574 HF
F-10	50		92 - 93	113 HF	2012
F-10	50	Jet-Line	94 - 98	123 HF	2012
F-12	50	Phantom	94 - 98	132 HF	2012
F-12	50	Phantom A.C.	99 - 03	123 HF	2012
F-15	50	Fire Fox	96 - 08	132 HF	2012
F-15	50	Fire Fox L.C.	96 - 08	109 HF	2012
MDX	50		86 - 87	574 HF	
MDX	50	Gold Enduro	87 - 87	607 HF	596 HF
MEX	50		86 - 87	541 HF	
MFX	50		86 - 87	541 HF	
MLX	50	Enduro	87 - 87	607 HF	596 HF
MRX	50		89 - 89	519 HF	
RCW	50	Ronco	83 - 83	532 HF	
RST	50		90 - 90	519 HF	519 HF
RST	50	Sport	87 - 87	574 HF	574 HF
SL	50	Centro	96 - 00	123 HF	2012
V4	50	Olympique	83 - 83	532 HF	
XL	50	Sport	83 - 85	532 HF	
	125	Monte	20 - 20	205 CT	102 CT
	125	Runner	86 - 86	532 HF	
	125	Runner	87 - 87	108 CT	
R	125	Madison	99 - 09	120 CT	152 CT
	250	Madison	99 - 04	159 MS	152 MS
MGX	425	Ronco	87 - 11	541 HF	
MGX	450	Ronco	87 - 11	595 HF	
MONDIAL					
	1000	EVO	04 - 04	762 HS*	730 LS
	1000	Piega	03 - 04	762 HS*	730 LS
	1000	RZ Nuda	04 - 04	762 HS*	730 LS
	1000	Starfighter	04 - 04	762 HS*	730 LS
MONTESA					
	250	Cota 4RT	04 - 16	802 RSI	803 RSI
Cota	260	4Ride	16 - 19	939 RSI	803 RSI
Cota	260	4RT	04 - 16	802 RSI	803 RSI
Cota	260	4RT Race Replica	15 - 19	939 RSI	803 RSI
Cota	300	RR	16 - 19	939 RSI	803 RSI
	360	315R	01 - 04	802 RSI	803 RSI
MORIWAKI					
MD	250		09 - 09	782 DC	618 RQ
MOTO-GUZZI					
	125	Custom	85 - 85	519 HF	
	125	Enduro TT	85 - 85	519 HF	
BX	125		92 - 92	519 HF	519 HF
	240	/4	77 - 77	519 HF	
	250	TS	75 - 76	519 HF	
	350		77 - 81	519 HF*	519 HF
	350	Falco	88 - 88	519 HF	519 HF
	350	Imola	78 - 84	519 HF*	519 HF
	350	Nevada	92 - 97	519 HF*	
NTX	350		88 - 88	519 HF	519 HF
NTX	350		90 - 90	519 HF	506 HF
V35	350	C	82 - 86	506 HF*	519 HF
V35	350	Florida	85 - 86	506 HF*	519 HF
V35	350	GT	77 - 77	519 HF	

* = 2 sets required / 2 jeux pour l'Avant.
Full compound selection, see under "Brake pad 1:1 Drawings" / Sélection complète de composés, voir "1:1 Schémas Plaquettes de frein".

				RECOMMENDED	
				1xx - 2xx = Scooter Pads 5xx - 9xx = Street, Off Road & Racing Pads 2xxx = Brake Shoes	
MOTO-GUZZI					
V35	350	GT	90 - 90	506 HF	519 HF
V35	350	II, Imola, Imola II	77 - 77	519 HF*	519 HF
V35	350	III	87 - 87	506 HF*	506 HF
V35	350	TT	86 - 86	506 HF*	506 HF
	400		77 - 84	519 HF*	519 HF
	500		77 - 80	519 HF*	519 HF
	500	Monza	78 - 85	519 HF*	519 HF
V50	500	1,2,3, Monza Chopper	77 - 77	519 HF*	519 HF
	650		80 - 84	519 HF*	519 HF
	650	Florida	85 - 84	519 HF*	519 HF
GT	650	Sessantacinque	89 - 89	519 HF*	519 HF
NTX	650		90 - 02	519 HF	506 HF
V65	650	Florida	86 - 94	506 HF*	506 HF
V65	650	GT	90 - 94	506 HF	598 HF
V65	650	Lario	86 - 94	519 HF*	519 HF
V65	650	NTX	87 - 02	519 HF	519 HF
V65	650	SP, Chopper	80 - 84	519 HF*	519 HF
V65	650	TT	86 - 94	519 HF*	519 HF
	750	Breva	03 - 09	706 HS	730 LS
	750	Ippogrifo	97 - 97	566 HF	519 HF
	750	Nevada	92 - 96	519 HF*	
	750	Nevada Classic ie	06 - 11	706 HF	730 HF
	750	Nevada, Club/Base	97 - 02	519 HF*	519 HF
	750	Nevada, Nevada Club	03 - 16	706 HF	730 HF
	750	Targa	89 - 89	519 HF*	519 HF
NTX	750		89 - 89	519 HF	519 HF
NTX	750		90 - 93	596 HS	506 LS
S3	750		75 - 76	506 HF*	
SP	750		91 - 92	506 HS	506 LS
V7	750	Cafe Classic	10 - 13	706 HS	730 LS
V7	750	Classic	09 - 12	706 HS*	730 LS
V7	750	Clubman Racer	10 - 10	706 HS*	730 LS
V7	750	Racer	11 - 11	706 HS	730 LS
V7	750	Racer	12 - 14	706 HS	588 HF
V7	750	Stone	12 - 14	706 HS	588 HF
V7 II	750	Racer	15 - 16	706 HS	588 HF
V7 II	750	Scrambler	16 - 16	706 HS	588 HF
V7 II	750	Special	15 - 16	706 HS	588 HF
V7 II	750	Stone	15 - 16	706 HS	588 HF
V7 II	750	Stornello	16 - 16	706 HS	588 HF
V7 II	750	Stornello Ltd. Edition	17 - 18	706 HS	588 HF
V7 III	750	Anniversario	17 - 18	706 HS	588 HF
V7 III	750	Carbon	18 - 19	706 HS	588 HF
V7 III	750	Euro 4	17 - 19	706 HS	588 HF
V7 III	750	Limited	19 - 19	706 HS	588 HF
V7 III	750	Milano	18 - 20	706 HS	588 HF
V7 III	750	Racer	17 - 20	706 HS	588 HF
V7 III	750	Rough	18 - 20	706 HS	588 HF
V7 III	750	Special	17 - 19	706 HS	588 HF
V7 III	750	Stone	17 - 20	706 HS	588 HF
V75	750		86 - 88	506 HF*	506 HF
V75	750	Duna	86 - 90	506 HF	506 HF
V75	750	TT Paris-Dakar	86 - 86	506 HF	506 HF
	850	Breva	06 - 09	706 HS*	730 LS
	850	Le Mans	76 - 79	506 HF*	506 HF
T	850		74 - 76	506 HF	
T3	850		75 - 80	506 HF*	506 HF
T4	850		75 - 82	506 HF*	506 HF
T5	850		75 - 88	506 HF*	506 HF
T5	850	N.T.	86 - 88	506 HF*	506 HF
V85	850	TT	19 - 19	706 HS*	588 HF
V85	850	TT travel	20 - 20	706 HS*	588 HF
V9	850	Bobber	16 - 17	706 HS	588 HF
V9	850	Bobber Sports	19 - 20	706 HS	588 HF
V9	850	Roamer	16 - 17	706 HS	588 HF
V9	850	X-Track	17 - 17	706 HS	588 HF
	940	Custom	07 - 07	706 HS*	674 LS
	1000		81 - 83	554 HF*	554 HF

				RECOMMENDED	
				1xx - 2xx = Scooter Pads 5xx - 9xx = Street, Off Road & Racing Pads 2xxx = Brake Shoes	
MOTO-GUZZI					
	1000	California II	85 - 88	506 HF*	506 HF
	1000	California III C	91 - 95	506 HS*	506 LS
	1000	California III, Fuel Injection	89 - 89	506 HF*	506 HF
	1000	Daytona	91 - 02	566 HF*	506 HF
	1000	Le Mans IV	85 - 89	506 HF*	506 HF
	1000	Le Mans, V	90 - 98	506 HS*	506 LS
	1000	Quota	92 - 92	566 HF*	614 HF
GT	1000	V	91 - 91	506 HS*	506 LS
RS	1000	Daytona	97 - 00	566 HF*	519 HF
S	1000		90 - 90	506 HS*	506 LS
SP	1000	III	91 - 94	506 HS*	506 LS
SP	1000	Le Mans	79 - 83	506 HF*	554 HF
V	1000	Strada	93 - 94	506 HF*	519 HF
V10	1000	Centauro	96 - 00	566 HF*	519 HF
	1100	California	96 - 99	506 HS*	506 LS
	1100	California EV	06 - 06	706 HS	674 LS
	1100	California EV Touring	06 - 06	706 HS	674 LS
	1100	California Jackal	00 - 00	566 HF*	674 HF
	1100	California Jackal	01 - 06	706 HS*	674 LS
	1100	California Jackal Basic	00 - 00	566 HF	674 HF
	1100	California Jackal Basic	01 - 06	706 HS	674 LS
	1100	California Special	99 - 00	566 HF*	674 HF
	1100	California Special	01 - 01	706 HS*	674 LS
	1100	California Special Sport Alloy	02 - 06	706 HS*	674 LS
	1100	California Stone Metal	02 - 03	706 HS	674 LS
	1100	California Stone, Stone Touring	02 - 05	706 HS	674 LS
	1100	California Titanium	03 - 05	706 HS*	674 LS
	1100	California Vintage	06 - 13	706 HS*	674 LS
	1100	Griso	05 - 10	706 HS	674 LS
	1100	Sport	96 - 04	566 HF*	519 HF
ES	1100	Quota	99 - 03	674 HF*	671 HF
EV	1100	California	97 - 00	566 HF*	519 HF
EV	1100	California, 80, Touring	01 - 01	706 HS*	519 LS
V	1100	Breva	04 - 04	706 HS	730 LS
V	1100	Breva, ABS	05 - 07	706 HS	671 LS
V11	1100	, Scura, Sport Scura	02 - 05	706 HS*	519 LS
V11	1100	Lemans, Lemans Tenni, Lemans Rosso Corsa	01 - 06	706 HS*	519 LS
V11	1100	Sport	97 - 00	566 HF*	519 HF
V11	1100	Sport Rosso Mandell	01 - 06	706 HS*	519 LS
V11	1100	Sport, Sport Naked	01 - 05	706 HS*	519 LS
	1200	Griso 8V	07 - 13	706 HS*	671 LS
	1200	Griso 8V SE	18 - 18	706 HS*	671 LS
	1200	MGS-01 Corsa	05 - 13	762 SP*	730 LS
	1200	Norge	06 - 14	706 HS*	671 LS
	1200	Norge GT 8V	10 - 13	706 HS*	671 LS
	1200	Sport	07 - 08	706 HS*	671 LS
	1200	Sport 4V	09 - 11	706 HS*	730 LS
	1200	Sport 8V	12 - 13	706 HS*	671 LS
	1200	Sport 8V SE	12 - 15	706 HS*	671 LS
	1200	Stelvio	08 - 11	706 SP*	671 LS
	1200	Stelvio 8V SE	12 - 16	706 SP*	671 LS
	1200	Stelvio NTX	09 - 11	706 SP*	671 LS
V	1200	Breva	08 - 13	706 HS	671 LS
	1400	Audace	15 - 17	706 HS*	674 LS
	1400	California Custom	13 - 15	706 HS*	674 LS
	1400	California Touring	13 - 15	706 HS*	674 LS
	1400	California Touring SE	16 - 17	706 HS*	674 LS
	1400	Eldorado	15 - 17	706 HS*	674 LS
MGX-21	1400	Flying Fortress	15 - 17	706 HS*	674 LS
MOTO-MORINI					
	125	KJ	84 - 88	606 HF	
	125	Strada	80 - 80	560 HF	
	250	Strada	80 - 80	560 HF	

* = 2 sets required / 2 jeux pour l'Avant.
Full compound selection, see under "Brake pad 1:1 Drawings" / Sélection complète de composés, voir "1:1 Schémas Plaquettes de frein".



RECOMMENDED
1xx - 2xx = Scooter Pads
5xx - 9xx = Street, Off Road & Racing Pads
2xxx = Brake Shoes




MOTO-MORINI					
XE	250	Country	88 - 88	519 HF	
	350	Coguaro	90 - 95	608 HF	519 HF
	350	Coguaro, New York	90 - 94	608 HF	519 HF
	350	Dart	88 - 88	608 HF	519 HF
	350	Dart	90 - 92	641 HF	519 HF
	350	Excalibur	86 - 86	594 HF	594 HF
	350	Excalibur	87 - 89	588 HF	606 HF
	350	Indiana	88 - 88	594 HF	519 HF
	350	K2	84 - 87	560 HF	606 HF
	350	Kanguro	88 - 88	588 HF	519 HF
	350	Strada	76 - 81	560 HF	
RLX	350	Excalibur	90 - 92	608 HF	519 HF
	400	Dart	89 - 89	608 HF	519 HF
	400	Dart	90 - 92	641 HF	519 HF
	400	S	82 - 82	519 HF*	519 HF
	500	Sei V Classic	89 - 89	519 HF*	
	500	Strada	80 - 82	560 HF	
	501	Camel	88 - 88	588 HF	519 HF
	501	Coguaro	89 - 89	608 HF	519 HF
	501	Excalibur	86 - 91	594 HF	594 HF
	501	Excalibur	87 - 87	588 HF	606 HF
	501	Excalibur	89 - 89	594 HF	519 HF
	501	New York	89 - 89	594 HF	519 HF
RLX	501	Excalibur	90 - 90	608 HF	519 HF
	650	Indiana	88 - 88	594 HF	519 HF
	650	Seiemmezzo	20 - 20	674 HS*	671 LS
	650	X-Cape	20 - 20	674 HS*	671 LS
	750	Indiana	88 - 88	594 HF	519 HF
	1200	11 1/2	18 - 18	706 HS*	730 LS
	1200	9 1/2	06 - 09	706 HS*	730 LS
	1200	Corsaro	06 - 13	706 HS*	730 LS
	1200	Corsaro ZT	20 - 20	901 SP*	730 LS
	1200	Corsaro ZZ	18 - 20	901 HS*	730 LS
	1200	Granferro	10 - 10	762 HS*	671 LS
	1200	Granpasso	08 - 13	674 HS*	671 LS
	1200	GT	10 - 10	674 HS*	671 LS
	1200	Milano	18 - 19	901 HS*	730 LS
	1200	Scrambler	09 - 10	674 HS*	671 LS
	1200	Scrambler	18 - 18	901 HS*	730 LS
	1200	Sport	08 - 13	706 HS*	730 LS
	1200	Super Scrambler	20 - 20	901 SP*	730 LS
MOTUS					
MST	1650		14 - 17	706 HS*	730 LS
MST-R	1650		14 - 17	841 HS*	730 LS
MV AGUSTA					
	675	Brutale	12 - 15	706 HS*	730 LS
	675	F3	11 - 12	706 HS*	763 LS
	675	F3	13 - 14	706 HS*	730 LS
	675	F3	15 - 20	901 HS*	730 LS
	675	F3 RC	16 - 20	901 HS*	730 LS
	750	Brutale, Brutale S	01 - 05	676 HS*	763 LS
	750	F4 SPR	01 - 03	676 HS*	763 LS
	750	F4/F4S	99 - 02	676 HS*	763 LS
	800	Brutale	13 - 20	706 HS*	730 LS
	800	Brutale Dragster	15 - 19	706 HS*	730 LS
	800	Brutale Dragster RC	17 - 20	706 HS*	730 LS
	800	Brutale Dragster RR	15 - 19	706 HS*	730 LS
	800	Brutale Dragster RR LH44	18 - 20	706 HS*	730 LS
	800	Brutale Dragster RR Pirelli	18 - 20	706 HS*	730 LS
	800	Brutale RC	18 - 20	706 HS*	730 LS
	800	Brutale RR	16 - 20	706 HS*	730 LS
	800	F3	14 - 20	901 HS*	763 LS
	800	F3 RC	16 - 20	901 HS*	730 LS
	800	Rivale	13 - 17	900 HS*	730 LS



RECOMMENDED
1xx - 2xx = Scooter Pads
5xx - 9xx = Street, Off Road & Racing Pads
2xxx = Brake Shoes




MV AGUSTA					
	800	RVS#1	18 - 20	706 HS*	730 LS
	800	Stradale	15 - 16	900 HS*	730 LS
	800	Superveloce	19 - 19	841 SP*	730 LS
	800	Superveloce	20 - 20	901 SP*	730 LS
	800	Turismo Veloce	14 - 19	900 HS*	730 LS
	800	Turismo Veloce Lusso	14 - 20	900 HS*	730 LS
	800	Turismo Veloce RC	17 - 20	900 HS*	730 LS
	910	Brutale	06 - 08	676 HS*	763 LS
	910	Brutale R	06 - 08	762 HS*	763 LS
	910	Brutale S	06 - 08	676 HS*	763 LS
	920	Brutale	12 - 14	706 HS*	763 LS
	989	Brutale R	09 - 09	706 HS*	763 LS
	990	Brutale R	10 - 11	706 HS*	763 LS
	1000	Brutale RR	20 - 20	841 SP*	730 LS
	1000	F4 LH44	18 - 20	841 SP*	763 LS
	1000	F4 Mamba	04 - 06	676 HS*	763 LS
	1000	F4 R	06 - 07	762 HS*	763 LS
	1000	F4 R	12 - 19	841 SP*	763 LS
	1000	F4 RC	15 - 20	841 SP*	763 LS
	1000	F4 RR	12 - 20	841 SP*	763 LS
	1000	F4 Tamburini	04 - 06	676 HS*	763 LS
	1000	F4S	04 - 06	676 HS*	763 LS
	1000	Rush	20 - 20	841 SP*	
	1078	Brutale RR	09 - 09	841 HS*	763 LS
	1078	F4 CC	08 - 11	841 SP*	763 LS
	1078	F4 RR	08 - 11	841 SP*	763 LS
	1090	Brutale Corse	14 - 16	841 HS*	763 LS
	1090	Brutale R	12 - 15	706 HS*	763 LS
	1090	Brutale RR	10 - 17	841 HS*	763 LS
MZ					
	660	(MUZ) Baghira	96 - 00	681 HF	684 HF
	660	(MUZ) Black Panther	00 - 06	681 HF	684 HF
	660	(MUZ) Mastiff	96 - 06	681 HF	684 HF
	660	(MUZ) Skorpion Cup	99 - 99	566 HF	519 HF
	660	(MUZ) Skorpion Replica	97 - 99	566 HF*	519 HF
	660	(MUZ) Skorpion Sport	95 - 99	566 HF	519 HF
	660	(MUZ) Skorpion Tour	95 - 00	566 HF	519 HF
	660	(MUZ) Skorpion Traveller	99 - 00	566 HF	519 HF
	660	(MUZ) Street Moto	00 - 06	681 HF	684 HF
	660	(MUZ) Super Moto	07 - 07	681 HF	684 HF
	1000	(MUZ) S	01 - 02	706 HS*	691 HF
	1000	(MUZ) S	03 - 10	624 HS*	715 LS
	1000	(MUZ) SF	05 - 10	624 HS*	715 LS
	1000	(MUZ) SFX	07 - 07	624 HS*	715 LS
	1000	(MUZ) SN	05 - 05	624 HS*	715 LS
	1000	(MUZ) ST	07 - 10	624 HS*	715 LS
NORTON					
	600	Commander	90 - 90	506 HF*	506 HF
	600	Interpol	83 - 88	506 HF*	506 HF
	600	Wankel Classic	88 - 89	506 HF*	506 HF
F-1	600		90 - 90	566 HF*	506 HF
TT	600		92 - 92	566 HF*	
MK2	850	Commando	73 - 75	505 HF	
MK3	850	Commando	75 - 77	505 HF	505 HF
	961	Commando Cafe Racer	11 - 14	762 HS*	730 LS
	961	Commando Cafe Racer MKII	18 - 19	900 HS*	730 LS
	961	Commando SE	10 - 11	706 HS*	730 LS
	961	Commando SE	12 - 14	762 HS*	730 LS
	961	Commando SF	13 - 15	762 HS*	730 LS
	961	Commando SF Sport	11 - 15	706 HS*	730 LS
	961	Commando Sport	18 - 19	900 HS*	730 LS
	961	Dominator Naked	17 - 19	900 HS*	730 LS
	1200	V4 RR	18 - 19	841 HS*	730 LS

* = 2 sets required / 2 jeux pour l'Avant.
Full compound selection, see under "Brake pad 1:1 Drawings" / Sélection complète de composés, voir "1:1 Schémas Plaquettes de frein".

				RECOMMENDED 1xx - 2xx = Scooter Pads 5xx - 9xx = Street, Off Road & Racing Pads 2xxx = Brake Shoes	
OHVALE					
GP-01	110		17 - 19	885 RST	872 RQ
GP-01	160		17 - 19	885 RST	872 RQ
GP-01	190		17 - 19	885 RST	872 RQ
GP-01	212		17 - 19	872 RST*	872 RQ
OSSA					
TR	125	i	15 - 15	802 RSI	803 RSI
TR	250	i	15 - 15	802 RSI	803 RSI
TR	280	i	10 - 15	802 RSI	803 RSI
TR	280	i Explorer	12 - 15	802 RSI	803 RSI
TR	300	Factory R	15 - 15	939 RSI	803 RSI
TR	300	i	15 - 15	802 RSI	803 RSI
PEUGEOT					
		e-Vivacity	11 - 15		2012
	50	Elyseo	02 - 05	105 HF	105 HF
	50	Elyseo (A.J.P. cal.)	99 - 01	105 HF	2012
	50	Elystar	03 - 05	105 HF	167 HF*
	50	Looxor	02 - 05	105 HF	2012
	50	Looxor	06 - 06	105 HF	105 HF
	50	Speedake (A.J.P. cal)	94 - 01	105 HF	2012
	50	Speedake (Brembo cal.)	94 - 01	123 HF	2012
	50	Speedake (Hengtong cal.)	94 - 01	102 HF	2012
	50	Speedfight 2 A/C	01 - 08	105 HF	
	50	Speedfight 2 L/C	01 - 08	105 HF	105 HF
	50	Speedfight 2 X-Race, Furious, 206 WRC	01 - 02	105 HF	105 HF
	50	Speedfight 3 (AC)	10 - 16	200 HF	2012
	50	Speedfight 3 (LC)	10 - 16	200 HF	157 HF
	50	Speedfight 3 RS (LC)	10 - 16	200 HF	157 HF
	50	Speedfight 4 (AC)	15 - 16	200 HF	
	50	Speedfight 4 (LC)	15 - 16	200 HF	157 HF
	50	Speedfight LBD/LBDP	00 - 00	105 HF	105 HF
	50	Speedfight LC, (A.J.P. cal.)	96 - 15	105 HF	2012
	50	Speedfight LC, (Brembo cal.)	96 - 15	123 HF	2012
	50	Speedfight LC, (Hengtong cal.)	96 - 15	102 HF	2012
	50	Speedfight Lemans	11 - 11	105 HF	105 HF
	50	Trekker Metal-X	01 - 08	105 HF	
	50	Trekker Offroad	99 - 01	102 HF	
	50	Trekker Road	99 - 00	105 HF	2012
	50	Trekker Streetboard	00 - 02	105 HF	
	50	Trekker Urban Black	00 - 00	105 HF	
	50	Vivacity	08 - 14	100 HF	
	50	Vivacity (A.J.P. cal.)	99 - 07	105 HF	
	50	Vivacity (Hengtong cal.)	05 - 07	102 HF	
	50	Vivacity Sportline	11 - 11	141 HF	
	100	Elyseo	02 - 05	105 HF	105 HF
	100	Elyseo (A.J.P. cal.)	99 - 01	105 HF	2012
	100	Looxor	02 - 07	105 HF	105 HF
	100	Speedfight	00 - 07	105 HF	105 HF
	100	Speedfight 2, X-Race	01 - 07	105 HF	105 HF
	100	Trekker Road	99 - 04	105 HF	
	100	Vivacity (A.J.P. cal.)	99 - 07	105 HF	
	100	Vivacity (Hengtong cal.)	05 - 07	102 HF	
	125	Elyseo	00 - 07	168 CT	167 CT
	125	Elyseo (A.J.P. cal.)	99 - 99	105 CT	
	125	Elystar	03 - 07	168 CT	167 CT
	125	Looxor	03 - 07	156 CT	167 CT
	125	Vivacity	10 - 16	197 CT	
	150	Elyseo	00 - 04	168 CT	167 CT
	150	Elystar	03 - 04	168 CT	167 CT
PIAGGIO VESPA					
	100	Fly	07 - 15		2205

				RECOMMENDED 1xx - 2xx = Scooter Pads 5xx - 9xx = Street, Off Road & Racing Pads 2xxx = Brake Shoes	
PIAGGIO VESPA					
	100	Zip	07 - 10		2205
	125	Liberty iGet 4T 3V	17 - 19	228 CT	
	125	Medley	16 - 19	228 CT	187 CT
	125	Medley S	17 - 19	228 CT	187 CT
	125	MP3	06 - 07	202 CT*	191 CT
	125	MP3 (Parking Brake)	06 - 07	209 HF	
	125	MP3 Efi	08 - 11	202 CT*	187 CT
	125	MP3 Efi (Parking Brake)	08 - 11	209 HF	
	100	Fly	07 - 15		2205
	125	MP3 Hybrid	09 - 12	202 CT*	187 CT
	125	MP3 Hybrid (Parking Brake)	09 - 12	209 HF	
	125	MP3 Yourban	11 - 12	202 CT*	187 CT
	125	MP3 Yourban (Parking Brake)	11 - 12	209 HF	
	125	New Liberty	16 - 19	228 CT	
	150	Fly	06 - 07		2205
	150	Medley	16 - 19	228 CT	187 CT
	250	MP3	06 - 07	202 MS*	191 MS
	250	MP3 (Parking Brake)	06 - 07	209 HF	
	250	MP3 Efi	08 - 09	202 MS*	187 MS
	250	MP3 Efi (Parking Brake)	08 - 09	209 HF	
	250	MP3 LT iE	09 - 09	202 MS*	187 MS
	250	MP3 LT iE (Parking Brake)	09 - 09	209 HF	
	300	MP3 Hybrid	11 - 12	202 MS*	187 MS
	300	MP3 Hybrid (Parking Brake)	11 - 12	209 HF	
	300	MP3 Hybrid iE	11 - 19	202 MS*	187 MS
	300	MP3 Hybrid iE (Parking Brake)	11 - 19	209 HF	
	300	MP3 iE	10 - 19	202 MS*	187 MS
	300	MP3 iE (Parking Brake)	10 - 19	209 HF	
	300	MP3 LT	13 - 19	202 MS*	187 MS
	300	MP3 LT (Parking Brake)	13 - 19	209 HF	
	300	MP3 LT Business	13 - 19	202 MS*	187 MS
	300	MP3 LT Business (Parking Brake)	13 - 19	209 HF	
	300	MP3 LT iE ABS	14 - 19	224 MS*	187 MS
	300	MP3 LT iE ABS (Parking Brake)	14 - 19	209 HF	
	300	MP3 LT Sport ABS	14 - 19	224 MS*	187 MS
	300	MP3 LT Sport ABS (Parking Brake)	14 - 19	209 HF	
	300	MP3 LT Touring	11 - 12	202 MS*	187 MS
	300	MP3 LT Touring (Parking Brake)	11 - 12	209 HF	
	300	MP3 Touring	11 - 12	202 MS*	187 MS
	300	MP3 Touring (Parking Brake)	11 - 12	209 HF	
	300	MP3 Yourban iE	11 - 19	202 MS*	187 MS
	300	MP3 Yourban iE (Parking Brake)	11 - 19	209 HF	
	400	MP3 iE	07 - 10	202 MS*	177 MS
	400	MP3 iE (Parking Brake)	07 - 10	209 HF	
	400	MP3 LT iE	09 - 10	202 MS*	177 MS
	400	MP3 LT iE (Parking Brake)	09 - 10	209 HF	
	400	MP3 LT Touring	11 - 12	202 MS*	177 MS
	400	MP3 LT Touring (Parking Brake)	11 - 12	209 HF	
	400	MP3 Touring	11 - 12	202 MS*	177 MS
	400	MP3 Touring (Parking Brake)	11 - 12	209 HF	
	500	MP3	10 - 10	202 MS*	177 MS
	500	MP3 (Parking Brake)	10 - 10	209 HF	

* = 2 sets required / 2 jeux pour l'Avant.
Full compound selection, see under "Brake pad 1:1 Drawings" / Sélection complète de composés, voir "1:1 Schémas Plaquettes de frein".

			RECOMMENDED 1xx - 2xx = Scooter Pads 5xx - 9xx = Street, Off Road & Racing Pads 2xxx = Brake Shoes	
PIAGGIO VESPA				
500	MP3 LT Touring			
	Business	11 - 13	202 MS*	177 MS
500	MP3 LT Touring			
	Business			
	(Parking Brake)	11 - 13	209 HF	
500	MP3 LT Touring			
	Business ABS	14 - 15	224 MS*	177 MS
500	MP3 LT Touring			
	Business ABS			
	(Parking Brake)	14 - 15	209 HF	
500	MP3 LT Touring Sport	11 - 13	202 MS*	177 MS
500	MP3 LT Touring Sport			
	(Parking Brake)	11 - 13	209 HF	
500	MP3 LT Touring Sport			
	ABS	14 - 15	224 MS*	177 MS
500	MP3 LT Touring Sport			
	ABS (Parking Brake)	14 - 15	209 HF	
500	MP3 Touring Business	11 - 12	202 MS*	177 MS
500	MP3 Touring Business			
	(Parking Brake)	11 - 12	209 HF	
500	MP3 Touring Sport	11 - 12	202 MS*	177 MS
500	MP3 Touring Sport			
	(Parking Brake)	11 - 12	209 HF	
POLARIS				
	EV-LSV	10 - 11	897 ATS*	800 ATS
	LSV 4x4	11 - 12	897 ATS*	800 ATS
	Ranger 48v EV	13 - 18	897 ATS*	800 ATS
50	Predator	04 - 14	2048*	
50	Scrambler	01 - 03	2048*	
90	Predator	03 - 14	2043*	
90	Scrambler	01 - 03	2048*	
90	Sportsman	01 - 15	2048*	
170	Ranger RZR	09 - 18	905 SI*	906 SI
200	Phoenix	05 - 09	544 ATS*	546 SI
200	Phoenix	10 - 14	905 SI*	546 SI
200	Sawtooth	06 - 07	544 ATS*	544 ATS
250	2x4, 4x4	90 - 93	716 ATS*	717 ATS
250	Big Boss 4x6, 6x6	89 - 93	716 ATS*	717 ATS
250	Big Boss 4x6, 6x6			
	Middle Axle Brake	89 - 93	717 ATS	
250	Cyclone	87 - 87	2028*	643 HF
250	Trail Blazer	90 - 98	716 ATS*	717 ATS
250	Trail Blazer	99 - 07	716 ATS*	755 ATS
250	Trail Boss	88 - 90	642 ATS*	643 HF
250	Trail Boss	91 - 99	716 ATS*	717 ATS
250	Trail Boss 2x4, 4x4	91 - 92	716 ATS*	717 ATS
250	Xplorer 4x4	00 - 02	716 ATS*	755 ATS
300	2x4, 4x4	94 - 95	716 ATS*	717 ATS
300	Big Boss 6x6	94 - 94	716 ATS*	717 ATS
300	Big Boss 6x6			
	Middle Axle Brake	94 - 94	717 ATS	
300	Hawkeye 2x4, 4x4	06 - 06	822 ATS*	822 ATS
300	Hawkeye 2x4, 4x4	07 - 11	716 ATS*	716 ATS
300	Sportsman 4x4	08 - 11	642 ATS*	642 ATS
300	Xplorer 4x4	96 - 99	716 ATS*	717 ATS
300	Xpress 2x4	98 - 99	716 ATS*	717 ATS
300	Xpress L	96 - 97	716 ATS*	717 ATS
325	Magnum 2x4, 4x4	00 - 02	716 ATS*	755 ATS
325	Trail Boss	00 - 02	716 ATS*	755 ATS
325	Xpedition	00 - 01	642 ATS*	755 ATS
325	Xpedition	02 - 02	642 ATS*	787 ATS
330	ATP	04 - 05	716 ATS*	716 ATS*
330	ATP	06 - 05	716 ATS*	787 ATS*
330	E Trail Blazer	08 - 12	642 ATS*	787 ATS
330	Magnum 2x4, 4x4	03 - 13	716 ATS*	787 ATS
330	Trail Boss	03 - 14	716 ATS*	755 ATS
335	Sportsman 4x4	99 - 02	716 ATS*	755 ATS

			RECOMMENDED 1xx - 2xx = Scooter Pads 5xx - 9xx = Street, Off Road & Racing Pads 2xxx = Brake Shoes	
POLARIS				
350	Big Boss	93 - 93	716 ATS*	717 ATS
350	Big Boss			
	Middle Axle Brake	93 - 93	717 ATS	
350	L 2x4, 4x4	90 - 90	716 ATS*	717 ATS
350	L 4x4	93 - 93	716 ATS*	717 ATS
350	Sportsman 4x4	93 - 93	716 ATS*	717 ATS
350	Trail Boss 2x4	85 - 87	2028*	
350	Trail Boss 2x4, 4x4	88 - 89	716 ATS*	717 ATS
350	Trail Boss L 2x4	91 - 93	716 ATS*	717 ATS
350	Trail Boss L 4x4	91 - 91	716 ATS*	717 ATS
400	Big Boss L 6x6	96 - 96	716 ATS*	717 ATS
400	Big Boss L 6x6			
	Middle Axle Brake	96 - 96	756 ATS	
400	L 2x4	94 - 95	716 ATS*	717 ATS
400	L 4x4	94 - 94	716 ATS*	717 ATS
400	Scrambler 2x4, 4x4	00 - 03	716 ATS*	755 ATS
400	Scrambler 4x4	98 - 98	716 ATS*	717 ATS
400	Scrambler 4x4	99 - 03	716 ATS*	755 ATS
400	Scrambler L 4x4	95 - 97	716 ATS*	717 ATS
400	Sport	99 - 00	716 ATS*	755 ATS
400	Sport L	94 - 98	716 ATS*	717 ATS
400	Sportsman	01 - 13	716 ATS*	755 ATS
400	Sportsman L 4x4	94 - 97	716 ATS*	717 ATS
400	Trail Blazer	03 - 04	716 ATS*	755 ATS
400	Xplorer L 4x4	95 - 99	716 ATS*	717 ATS
400	Xplorer L 4x4	00 - 02	716 ATS*	755 ATS
400	Xpress L	96 - 97	716 ATS*	717 ATS
425	2x4, 4x4 Magnum	95 - 98	716 ATS*	717 ATS
425	Magnum 6x6	96 - 96	716 ATS*	717 ATS
425	Magnum 6x6			
	Middle Axle Brake	96 - 96	756 ATS	
425	Xpedition 4x4	00 - 03	716 ATS*	755 ATS
450	Outlaw MXR	09 - 11	898 ATS*	642 ATS
450	Outlaw S	08 - 08	898 ATS*	642 ATS
450	Sportsman	06 - 09	716 ATS*	787 ATS
455	Diesel EBS 4x4	99 - 01	716 ATS*	755 ATS
500	ATP HO	04 - 05	716 ATS*	716 ATS*
500	Big Boss 6x6	98 - 99	716 ATS*	717 ATS
500	Big Boss 6x6			
	Middle Axle Brake	98 - 99	717 ATS	
500	E Scrambler 2x4, 4x4	08 - 11	642 ATS*	787 ATS
500	Magnum 2x4, 4x4	02 - 07	716 ATS*	787 ATS
500	Magnum 4x4	00 - 01	716 ATS*	755 ATS
500	Outlaw	06 - 09	716 ATS*	716 ATS
500	Predator	03 - 13	716 ATS*	716 ATS
500	Predator e	06 - 13	716 ATS*	787 ATS
500	Ranger 2x4	08 - 07	897 ATS*	800 ATS
500	Ranger 2x4 EFi	08 - 13	897 ATS*	800 ATS
500	Ranger 2x4, 4x4, 6x6	02 - 13	800 ATS*	800 ATS*
500	Ranger 4x4	12 - 13	897 ATS*	800 ATS
500	Ranger 6x6	00 - 02	716 ATS*	
500	Ranger XP	06 - 09	800 ATS*	800 ATS
500	Revolver	06 - 06	642 ATS*	642 ATS
500	Scrambler 2x4	01 - 02	716 ATS*	755 ATS
500	Scrambler 4x4	97 - 97	716 ATS*	717 ATS
500	Scrambler 4x4	98 - 13	716 ATS*	755 ATS
500	Sportsman 4x4	96 - 14	716 ATS*	717 ATS
500	Sportsman 6x6	00 - 11	716 ATS*	757 ATS
500	Sportsman EBS 4x4	98 - 02	716 ATS*	755 ATS
500	Sportsman HO			
	(from 16.12.2008)	09 - 14	642 ATS*	899 ATS
500	Sportsman HO			
	(to 15.12.2008)	03 - 08	642 ATS*	787 ATS
500	Xplorer 4x4	97 - 97	716 ATS*	717 ATS
525	Outlaw	07 - 13	898 ATS*	642 ATS
525	Outlaw IRS	08 - 13	898 ATS*	642 ATS
525	Outlaw S	08 - 11	898 ATS*	642 ATS
550	Sportsman	11 - 14	899 ATS*	899 ATS

* = 2 sets required / 2 jeux pour l'Avant.
Full compound selection, see under "Brake pad 1:1 Drawings" / Sélection complète de composés, voir "1:1 Schémas Plaquettes de frein".

RECOMMENDED
1xx - 2xx = Scooter Pads
5xx - 9xx = Street, Off Road & Racing Pads
2xxx = Brake Shoes

POLARIS					
	550	Sportsman EPS	10 - 14	899 ATS*	899 ATS
	550	Sportsman EPS X2	14 - 14	899 ATS*	899 ATS
	550	Sportsman Touring EPS	10 - 12	899 ATS*	899 ATS
	550	Sportsman X2	10 - 14	899 ATS*	899 ATS
	550	Sportsman XP	09 - 12	899 ATS*	899 ATS
	550	Sportsman XP EPS	09 - 14	899 ATS*	899 ATS
	550	Sportsman XP Touring EPS	12 - 14	899 ATS*	899 ATS
	570	Ranger RZR EFi	12 - 13	898 ATS*	642 ATS
	600	Sportsman	03 - 06	642 ATS*	787 ATS*
	700	MVRS 4x4	08 - 08	897 ATS*	897 ATS
	700	Ranger 4x4 EFi	08 - 08	897 ATS*	800 ATS
	700	Ranger 6x6 EFi	12 - 13	897 ATS*	800 ATS
	700	Sportsman	02 - 09	642 ATS*	787 ATS*
	700	Sportsman MV 700	05 - 06	642 ATS*	787 ATS
	800	MVRS 4x4	08 - 08	897 ATS*	897 ATS
	800	Ranger 4x4 EFi	10 - 10	897 ATS*	897 ATS
	800	Ranger 6x6 EFi	12 - 15	897 ATS*	897 ATS
	800	Ranger Crew	12 - 15	897 ATS*	897 ATS
	800	Ranger RZR EFi	08 - 14	898 ATS*	642 ATS
	800	Ranger RZR S EFi	09 - 15	898 ATS*	642 ATS
	800	Ranger RZR4 EFi	12 - 14	897 ATS*	800 ATS
	800	Ranger XP	12 - 13	897 ATS*	800 ATS
	800	RZR	08 - 15	898 ATS*	642 ATS
	800	RZR-4	10 - 14	897 ATS*	800 ATS
	800	Sportsman (from 16.12.2008)	09 - 14	642 ATS*	899 ATS
	800	Sportsman (to 15.12.2008)	05 - 08	642 ATS*	787 ATS
	850	Forest	15 - 15	899 ATS*	899 ATS
	850	Scrambler	15 - 15	899 ATS*	899 ATS
	850	Scrambler HO EPS	13 - 15	899 ATS*	899 ATS
	850	Scrambler MD	15 - 15	899 ATS*	899 ATS
	850	Scrambler XP HO EPS	14 - 15	899 ATS*	899 ATS
	850	Sportsman	11 - 13	899 ATS*	899 ATS
	850	Sportsman MV	12 - 12	899 ATS*	899 ATS
	850	Sportsman Touring	14 - 15	899 ATS*	899 ATS
	850	Sportsman Touring EPS	10 - 13	899 ATS*	899 ATS
	850	Sportsman Touring HO EPS	13 - 14	899 ATS*	899 ATS
	850	Sportsman Touring MD	15 - 15	899 ATS*	899 ATS
	850	Sportsman X2	11 - 11	899 ATS*	899 ATS
	850	Sportsman XP	09 - 14	899 ATS*	899 ATS
	850	Sportsman XP EPS	09 - 14	899 ATS*	899 ATS
	850	Sportsman XP HO EPS	13 - 14	899 ATS*	899 ATS
	850	Sportsman XP HO EPS MD	15 - 15	899 ATS*	899 ATS
	850	Sportsman XP Touring EPS	15 - 15	899 ATS*	899 ATS
	900	Ranger 4x4 Diesel	10 - 14	897 ATS*	897 ATS
	900	Ranger RZR4 XP EFi	12 - 15	897 ATS*	897 ATS
	900	Ranger RZR4 XP4 EFi	12 - 14	897 ATS*	897 ATS
RZR	900	50/55/60 Inch	15 - 20	970 PSI*	898 PSI
RZR-S	900	60 Inch	20 - 20	970 PSI*	898 PSI
	925	RZR XP Turbo	16 - 19	954 SI*	897 SI
	925	RZR XP Turbo	20 - 20	954 SI*	978 SI*
	925	RZR XP4 Turbo	16 - 19	954 SI*	897 SI
	925	RZR XP4 Turbo	20 - 20	954 SI*	978 SI*
	925	RZR XP4 Turbo S	19 - 20	977 SI*	897 SI*
	925	RZR XP4 Turbo S Velocity	19 - 20	977 SI*	897 SI*
	1000	Forest	15 - 15	899 ATS*	899 ATS
	1000	General EPS	16 - 18	897 ATS*	898 ATS
	1000	Ranger RZR XP	14 - 14	897 ATS*	897 ATS
	1000	Scrambler MD	15 - 18	899 ATS*	899 ATS
	1000	Scrambler XP	15 - 18	899 ATS*	899 ATS
	1000	Scrambler XP HO EPS	14 - 14	899 ATS*	899 ATS

RECOMMENDED
1xx - 2xx = Scooter Pads
5xx - 9xx = Street, Off Road & Racing Pads
2xxx = Brake Shoes

POLARIS					
	1000	Sportsman MD	15 - 18	899 ATS*	899 ATS
	1000	Sportsman Touring	15 - 18	899 ATS*	899 ATS
	1000	Sportsman XP	15 - 18	899 ATS*	899 ATS
RZR	1000	60 Inch	16 - 20	970 PSI*	898 PSI
RZR-S	1000	60 Inch	20 - 20	970 PSI*	898 PSI
	1050	MV Diesel Crew	13 - 18	897 ATS*	897 ATS
POLINI					
X1	50	R	04 - 06	794 RSI	794 RSI
X3	50	R	04 - 06	794 RSI	794 RSI
X5	65	RP	05 - 06	794 RSI	794 RSI
REWACO					
		FX4	07 - 07	519 HF	
		FX5	07 - 07	519 HF	
		FX6	07 - 07	519 HF	
		HS4	01 - 01	519 HF	
		HS5	01 - 01	519 HF	
		HS6	01 - 01	519 HF	
		RF1	07 - 14	519 HF	
ROYAL ENFIELD					
	411	Himalayan	19 - 20	671 HF	675 HF
	500	Bullet	20 - 20	671 HS	675 LS
	500	Bullet Trials	20 - 20	671 HS	675 LS
	500	Classic	19 - 19	671 HF	675 HF
	535	Continental GT	14 - 17	674 HS	675 LS
	650	Continental GT	20 - 20	674 HS	675 LS
	650	Interceptor	19 - 20	674 HS	675 LS
SACHS					
	50	MadAss	04 - 05	200 HF	
	50	MadAss 4T	05 - 09	200 HF	100 HF
	125	MadAss	09 - 09	200 HF	100 HF
	500	MadAss	05 - 08	566 HF*	684 HF
SCORPA					
SY	115	F Trial	06 - 06	802 RSI	803 RSI
TY-S	115	F Trial	06 - 06	559 HF	803 RSI
	125	Twenty Trial	16 - 18	802 RSI	803 RSI
SY	125	F Trial	06 - 11	802 RSI	803 RSI
TY-S	125	F Trial	06 - 08	559 HF	803 RSI
	250	T-Ride	08 - 11	859 HF	773 HF
	250	Twenty Trial	16 - 18	802 RSI	803 RSI
SY	250	F Trial	06 - 11	802 RSI	803 RSI
SY	250	Trial	00 - 01	802 RSI	803 RSI
	300	Twenty Trial	16 - 18	802 RSI	803 RSI
SHERCO					
	50	AJP Caliper incl. pin/spring	91 - 19	188 HF	
	80	0,8	01 - 03	559 HF	559 HF
ST	80	(Formula cal.)	13 - 14	885 RSI	803 RSI
SE-R	125		17 - 19	671 SI	791 SI
ST	125	(Formula cal.)	13 - 14	885 RSI	803 RSI
ST	125	1,25	01 - 05	559 HF	559 HF
ST	125	1,25	06 - 11	802 RSI	803 RSI
ST	200	2	01 - 01	559 HF	559 HF
SE	250	, R	14 - 14	671 SI	791 SI
SE	250	2.5i Enduro	06 - 11	671 SI	790 SI
SE	250	F, F-R	14 - 19	671 SI	791 SI
SE	250	i/iR	12 - 13	671 SI	791 SI
SE	250	i-F	13 - 13	671 SI	791 SI
ST	250		99 - 00	559 RSI	559 RSI
ST	250	(Formula cal.)	13 - 14	885 RSI	803 RSI
ST	250	2,5	01 - 01	802 RSI	803 RSI
SX	250	2.5i-F	09 - 11	671 RSI	790 RSI
ST	290	(Formula cal.)	13 - 14	885 RSI	803 RSI

* = 2 sets required / 2 jeux pour l'Avant.
Full compound selection, see under "Brake pad 1:1 Drawings" / Sélection complète de composés, voir "1:1 Schémas Plaquettes de frein".



RECOMMENDED
1xx - 2xx = Scooter Pads
5xx - 9xx = Street, Off Road & Racing Pads
2xxx = Brake Shoes



SHERCO					
ST	290	2,9	01 - 01	802 RSI	803 RSI
SCF-R	300		16 - 19	671 SI	791 SI
SE	300	, R	14 - 19	671 SI	791 SI
SE	300	3.0i-F	10 - 11	671 SI	790 SI
SE	300	F, F-R	14 - 19	671 SI	791 SI
SE	300	i/iR	12 - 13	671 SI	791 SI
SE	300	i-F	13 - 13	671 SI	791 SI
ST	300		16 - 19	802 RSI	803 RSI
ST	305	(Formula cal.)	13 - 14	885 RSI	803 RSI
ST	320	3.2F	05 - 05	802 RSI	803 RSI
SE	450	4.5i Enduro	04 - 04	671 SI	604 SI
SE	450	4.5i Enduro	05 - 11	671 SI	790 SI
SE	450	F, F-R	14 - 19	671 SI	791 SI
SE	450	iR	12 - 13	671 SI	791 SI
SM	450	4.5i Supermotard	06 - 06	762 RST	790 RSI
SE	510	5.1i Enduro	06 - 11	671 SI	790 SI
SE	510	iR	12 - 13	671 SI	791 SI
SUZUKI					
RE		5M, A	75 - 77	503 HF	2098
	50	AJP Caliper			
		incl. pin/spring	91 - 19	188 HF	
AH	50	Adress	92 - 95	101 HF	2181
ALT	50		83 - 84		2020
DR-Z	50		19 - 21	2010	2010
FA	50		80 - 91	2101	2101
GSXR	50		87 - 87	135 HF	2017
JR	50		89 - 07	2020	2020
LT	50		84 - 02		2020
LT-A	50	Quadmaster	01 - 05	2101	2017
LT-Z	50	Quadsport	06 - 20	2101*	2017
OR	50		79 - 79	2015	2015
OR	50		80 - 80	2017	2017
OR	50	E	80 - 80	135 HF	2017
RG	50	GAG	87 - 92	135 HF	2103
RG	50	Gamma	90 - 96	135 HF	2103
ZR	50		81 - 87	135 HF	2017
ZZ	50	Scooter	92 - 92	101 HF	2181
RM	60		03 - 03	2093	2093
RM	65		03 - 06	752 RSI	536 RSI
DR-Z	70		08 - 20	2010	2010
AH	80	Adress, V, Tune	88 - 91	101 HF	2181
AH	80	Scooter	92 - 94	102 HF	2181
DS	80		80 - 96	2017	2017
JR	80		01 - 07	2017	2017
LT	80		87 - 06	2101*	2104
RM	80		77 - 79	2015	2015
RM	80		80 - 81	2017	2017
RM	80		82 - 82	2022	2182
RM	80		83 - 85	2014	2017
RM	80		86 - 89	548 HF	2182
RM	80		90 - 95	548 HF	544 SI
RM	80		96 - 01	702 RSI	544 RSI
RM	85		02 - 04	702 RSI	544 RSI
RM	85		05 - 21	726 RSI	820 RSI
LT-Z	90	Quadsport	07 - 20	2017*	2104
RV	90		73 - 81	2015	2015
TS	90		71 - 73	2015	2014
AH	100	V Adress	91 - 94	101 HF	2181
DR	100		83 - 90	2017	2017
RM	100		76 - 78	2015	2014
RM	100		79 - 81	2015	2103
RM	100		03 - 03	726 RSI	592 RSI
	110	Smash	03 - 06	2015	2015
DR-Z	110		02 - 06	2093	2015
FX	110	Shogun	98 - 02	2015	2015
UK	110	Adress	15 - 19	122 HF	2181
ALT	125		84 - 86		2016



RECOMMENDED
1xx - 2xx = Scooter Pads
5xx - 9xx = Street, Off Road & Racing Pads
2xxx = Brake Shoes



SUZUKI					
ALT	125	D	83 - 83		2107
DR	125		82 - 84	2014	2014
DR	125		86 - 02	536 HF	2014
DR-Z	125	K	03 - 12	2017	2017
DR-Z	125	L	03 - 20	702 SI	2017
GN	125		91 - 04	546 HF	2014
GS	125	ESD	83 - 94	585 HF	2014
GSX-R	125	RL	17 - 21	951 HF	915 HF
GSX-R	125	RLX	17 - 21	951 HF	915 HF
GSX-S	125	ML	17 - 19	951 HF	915 HF
GSX-S	125	MLX	17 - 19	951 HF	915 HF
GT	125		75 - 78	503 HF	2014
GT	125		78 - 82	515 HF	2014
GT	125		80 - 82	546 HF	2014
LT	125	D	83 - 83		2107
LT	125	E-H	84 - 87		2016
RH	125	X	87 - 87	536 HF	
RM	125		75 - 78	2014	2014
RM	125		79 - 80	2014	2103
RM	125		81 - 83	2014	2102
RM	125		84 - 84	2108	2102
RM	125		85 - 86	581 HF	2102
RM	125		87 - 87	611 SI	2102
RM	125		88 - 88	611 RSI	584 RSI
RM	125		89 - 90	611 RSI	632 RSI
RM	125		91 - 95	611 RSI	648 RSI
RM	125		96 - 09	694 RSI	604 RSI
RV	125	VanVan	03 - 18	704 HF	
SP	125		82 - 83	2014	2014
SP	125		86 - 88	536 HF	2014
TS	125		72 - 72	2015	2014
TS	125		82 - 82	2014	2017
TS	125		84 - 84	2014	
TS	125		85 - 89	536 HF	2103
TS	125		89 - 96	611 HF	632 HF
UC	125	Epicuro	99 - 02	122 CT	2202
UE	125		01 - 03	101 CT	
UH	125	Burgman	07 - 14	192 CT	196 CT
UE	150	CT	02 - 03	101 CT	
LT	160		89 - 92	2181*	2016
LT-F	160		91 - 04	2181*	2016
PE	175		82 - 82	2104	
ALT	185		85 - 87		2016
GT	185		75 - 77	503 HF	2014
LT	185		84 - 87		2016
TS	185		74 - 81	2014	2014
DR	200		86 - 88	536 SI	2014
DR	200	S	15 - 17	536 SI	2014
DR	200	SE	96 - 13	536 SI	2014
DR	200	T	96 - 96	536 SI	2014
RV	200	VanVan	16 - 19	704 HF	
SP	200		86 - 88	536 HF	2014
UH	200		07 - 07	192 CT	
UH	200	Burgman	07 - 13	192 CT	196 CT
UH	200	Burgman	14 - 18	134 CT	196 CT
LT	230		85 - 86	2051*	2016
LT	230		85 - 88	591 SI*	584 SI
LT	230		86 - 93	591 SI*	592 SI
LT-F	230		86 - 87	2051*	2016
AN	250	Burgman	98 - 03	146 MS	125 MS
AN	250	Burgman	04 - 06	146 MS	174 MS
DL	250	V-Strom	17 - 19	627 HF	657 HF
DR	250		82 - 83	2014	2014
DR	250		85 - 89	536 HF	2014
DR	250		90 - 95	611 HF	632 HF
DR-Z	250		01 - 07	694 SI	648 SI
GN	250		86 - 97	533 HF	2014
GS	250		80 - 82	533 HF	2018

* = 2 sets required / 2 jeux pour l'Avant.
Full compound selection, see under "Brake pad 1:1 Drawings" / Sélection complète de composés, voir "1:1 Schémas Plaquettes de frein".



RECOMMENDED
1xx - 2xx = Scooter Pads
5xx - 9xx = Street, Off Road & Racing Pads
2xxx = Brake Shoes



SUZUKI					
GT	250		73 - 78	503 HF	2097
GT	250		78 - 81	515 HF	2018
GW	250	Inazuma	12 - 19	627 HS	657 LS
GW	250	Inazuma F	15 - 19	627 HS	881 LS
LT	250		85 - 86	2051*	2098
LT	250		85 - 87	591 SI*	584 SI
LT	250		88 - 94	591 SI*	649 SI
LT	250		89 - 90	591 SI*	592 SI
LT	250	4WD	87 - 98	2053*	2110
LT-F	250		88 - 01	2053*	2110
LT-F	250	4WD V, W Quadrunner	97 - 98	2053*	2098
LT-F	250	Ozark	03 - 13	536 SI*	
LT-Z	250	Quad Sport	04 - 11	536 SI*	
RH	250		85 - 87	536 HF	
RM	250		76 - 78	2014	2016
RM	250		79 - 79	2016	
RM	250		80 - 80	2104	
RM	250		81 - 82	2107	2102
RM	250		83 - 83	2108	2102
RM	250		84 - 84	2108	2104
RM	250		85 - 85	581 HF	2104
RM	250		86 - 86	582 HF	2104
RM	250		87 - 88	611 RSI	584 RSI
RM	250		89 - 90	611 RSI	632 RSI
RM	250		91 - 95	611 RSI	648 RSI
RM	250		96 - 09	694 RSI	604 RSI
RMX	250		89 - 95	611 RSI	648 RSI
RMX	250		96 - 98	694 RSI	648 RSI
RMX	250	X-K1	99 - 99	694 SI	604 SI
RM-Z	250		04 - 21	694 RSI	790 RSI
SP	250		85 - 85	536 HF	2014
TS	250		74 - 82	2016	2016
TU	250	X	09 - 19	705 HF	
LT-F	280	4WD	91 - 98		2052
GS	300		82 - 85		2018
LT	300		87 - 89	2051*	2098
LT-F	300		88 - 90	2051	2052
LT-F	300	King Quad	91 - 02		2052
LT-F	300	King Quad Left	02 - 02	611 SI	
LT-F	300	King Quad Right	02 - 02	638 SI	
DR	350		90 - 99	611 HF	648 HF
DR	350	V, W, X	97 - 99	694 SI	648 SI
SP	370		77 - 79	2016	2016
GT	380		73 - 77	503 HF	2097
GT	380	Asco	77 - 77	515 HF	2097
AN	400	Burgman	99 - 00	146 MS	125 MS
AN	400	Burgman	01 - 06	146 MS	174 MS
DR-Z	400	S /E	00 - 12	694 HF	604 HF
DR-Z	400	SM	05 - 10	694 RSI	604 RSI
GN	400		80 - 80	533 HF	2018
GS	400		77 - 78	511 HF	2097
GS	400		78 - 82	515 HF	2097
GSF	400	Bandit	91 - 92	597 HS*	556 LS
GSF	400	Bandit	93 - 97	631 HS*	556 LS
KLT-A	400	King Quad Left	08 - 14	835 SI	
KLT-A	400	King Quad Right	08 - 14	836 SI	
KLT-F	400	King Quad Left	08 - 14	835 SI	
KLT-F	400	King Quad Right	08 - 14	836 SI	
LT-A	400	Eiger 2WD/4WD	02 - 07	536 SI*	2018
LT-A	400	King Quad Left	08 - 14	835 SI	
LT-A	400	King Quad Right	08 - 14	836 SI	
LT-F	400	Eiger 2WD/4WD	02 - 07	536 SI*	2018
LT-F	400	King Quad Left	08 - 14	835 SI	
LT-F	400	King Quad Right	08 - 14	836 SI	
LT-Z	400	Quad Sport	02 - 19	592 SI*	649 SI
PE	400		79 - 81	2016	2016
RM	400		78 - 78	2014	2016
RM	400		79 - 79	2016	



RECOMMENDED
1xx - 2xx = Scooter Pads
5xx - 9xx = Street, Off Road & Racing Pads
2xxx = Brake Shoes



SUZUKI					
RM	400		80 - 80	2104	
SP	400		80 - 82	2016	2016
GS	425		79 - 79	511 HF	2018
GS	425		80 - 80	515 HF	2018
GS	450		80 - 83	533 HF	2018
GS	450		85 - 85	534 HF	2018
GS	450		86 - 86	546 HF*	512 HF
GS	450		90 - 90	597 HS	597 LS
LT-A	450	King Quad Left	08 - 14	835 SI	
LT-A	450	King Quad Right	08 - 14	836 SI	
LT-R	450	Left	06 - 12	611 SI	649 SI
LT-R	450	Right	06 - 12	638 SI	
RMX	450	Z Efi	10 - 18	694 SI	790 SI
RM-Z	450		05 - 21	694 RSI	790 RSI
RM	465		81 - 82	2107	2014
GS	500	F	04 - 08	704 HS	556 HF
GT	500		73 - 75	515 HF	2098
GT	500		75 - 77	503 HF	2098
LT	500		87 - 95	591 SI*	649 SI
LT-A	500	F Vinson	02 - 02	536 SI*	
LT-A	500	FY Quadmaster Left	00 - 08	611 SI	
LT-A	500	FY Quadmaster Right	00 - 08	638 SI	
LT-A	500	King Quad Left	11 - 14	835 SI	
LT-A	500	King Quad Right	11 - 14	836 SI	
LT-F	500	F Left	98 - 07	638 SI	
LT-F	500	F Right	98 - 07	611 SI	
RM	500		83 - 84	2108	2014
RM	500		85 - 87	581 HF	2014
RM	500		87 - 89	611 RSI	592 RSI
GS	550		77 - 77	515 HF*	2099
GS	550		78 - 79	515 HF*	
GS	550		80 - 84	534 HF*	512 HF
GS	550		83 - 86	556 HF	556 HF
GT	550		73 - 77	503 HF	2098
GT	550		78 - 78	515 HF	2099
GSF	600	Bandit	95 - 99	627 HS*	556 LS
GSF	600	Bandit / S Bandit Left	00 - 04	705 HS	556 LS
GSF	600	Bandit / S Bandit Right	00 - 04	704 HS	
GSR	600		06 - 10	631 HS*	833 LS
GSX	600	FW Left	98 - 04	705 HS	556 LS
GSX	600	FW Right	98 - 04	704 HS	
GSX	600	Katana	88 - 89	620 HF*	556 HF
GSX	600	Katana	90 - 97	620 HS*	556 LS
GSX-R	600		92 - 93	624 HS*	556 LS
GSX-R	600		97 - 03	631 HS*	556 LS
GSX-R	600		04 - 05	806 HS*	765 LS
GSX-R	600		06 - 10	806 HS*	833 LS
GSX-R	600		11 - 21	841 HS*	834 LS
RF	600	R	93 - 96	627 HS*	556 LS
SP	600	F	85 - 87	582 HF	2014
AN	650	A Burgman Executive	04 - 20	183 MS*	182 MS
AN	650	Burgman	02 - 19	183 MS*	182 MS
AN	650	Z Burgman Executive	13 - 19	183 MS*	182 MS
DL	650	V-Strom Left	04 - 20	705 HS	657 LS
DL	650	V-Strom Right	04 - 20	704 HS	
DL	650	V-Strom XT	15 - 20	705 HS	657 LS
DL	650	V-Strom XT Right	15 - 20	704 HS	
DR	650		90 - 95	626 HS	635 LS
DR	650	R	92 - 92	626 HS	635 LS
DR	650	SE T-W	96 - 99	694 HF	648 HF
GR	650		83 - 84	534 HF*	512 HF
GR	650	X	83 - 84	534 HF	2018
GS	650		81 - 83	534 HF*	512 HF
GS	650	G	83 - 87	534 HF*	512 HF
GS	650	Turbo, XN	83 - 85	534 HF*	512 HF
GSF	650	Bandit	07 - 11	631 HS*	657 LS
GSF	650	Bandit / S Bandit Left	05 - 05	705 HS	765 LS

* = 2 sets required / 2 jeux pour l'Avant.
Full compound selection, see under "Brake pad 1:1 Drawings" / Sélection complète de composés, voir "1:1 Schémas Plaquettes de frein".



RECOMMENDED
1xx - 2xx = Scooter Pads
5xx - 9xx = Street, Off Road & Racing Pads
2xxx = Brake Shoes



SUZUKI					
GSF	650	Bandit / S Bandit			
		Right	05 - 05	704 HS	
GSF	650	Bandit / S Bandit ABS			
		Left	06 - 06	705 HS	657 LS
GSF	650	Bandit / S Bandit ABS			
		Right	06 - 06	704 HS	
GSF	650	Bandit ABS	07 - 12	631 HS*	657 LS
GSF	650	S Bandit	07 - 11	631 HS*	657 LS
GSF	650	S Bandit ABS	07 - 13	631 HS*	657 LS
GSX	650	F	08 - 18	631 HS*	657 HF
LS	650	P	86 - 88	581 HF	2018
LS	650	P Savage	95 - 04	581 HF	2018
S40	650	Boulevard	05 - 18	581 HF	2018
SFV	650	Gladius Left	09 - 16	705 HS	881 LS
SFV	650	Gladius Right	09 - 16	704 HS	
SV	650	Left	16 - 18	705 HS	881 LS
SV	650	Right	16 - 18	704 HS	
SV	650		19 - 20	631 HS*	881 LS
SV	650	,S Left	99 - 02	704 HS	
SV	650	,S Right	99 - 02	705 HS	556 LS
SV	650	,S Left	03 - 12	705 HS	657 LS
SV	650	,S Right	03 - 12	704 HS	
SV	650	,S ABS	07 - 18	705 HS	657 LS
SV	650	X Left	18 - 18	705 HS	881 LS
SV	650	X Right	18 - 18	704 HS	
SV	650	X	19 - 20	631 HS*	881 LS
GS	700		85 - 85	533 HF*	512 HF
GV	700	GLG Madura	86 - 86	533 HF*	2052
LT-A	700	King Quad Left	05 - 11	835 SI	
LT-A	700	King Quad Right	05 - 11	836 SI	
LT-V	700	Quadrunner			
		Twin Peaks Left	04 - 06	801 SI	
LT-V	700	Quadrunner			
		Twin Peaks Right	04 - 06	798 SI	
VS	700	GLFG	86 - 87	577 HF	2052
GS	750		76 - 77	511 HF	512 HF
GS	750		78 - 79	515 HF*	512 HF
GS	750	D	77 - 79	511 HF*	512 HF
GS	750	E	77 - 79	511 HF*	512 HF
GS	750	Katana	85 - 86	556 HF*	556 HF
GS	750	RF	85 - 85	577 HF*	556 HF
GS	750	SD	83 - 83	534 HF*	512 HF
GSR	750	Left	11 - 16	705 HS	657 LS
GSR	750	Right	11 - 16	704 HS	
GSX	750	Left	98 - 08	705 HS	556 LS
GSX	750	Right	98 - 08	704 HS	
GSX	750	FW Left	98 - 02	705 HS	556 LS
GSX	750	FW Right	98 - 02	704 HS	
GSX	750	Katana	89 - 96	620 HS*	556 LS
GSX-R	750		85 - 87	577 HF*	556 HF
GSX-R	750		88 - 93	624 HS*	556 LS
GSX-R	750		94 - 99	686 HS*	556 LS
GSX-R	750		00 - 03	631 HS*	556 LS
GSX-R	750		04 - 05	806 HS*	765 LS
GSX-R	750		06 - 10	806 HS*	833 LS
GSX-R	750		11 - 18	841 HS*	834 LS
GSX-S	750	Left	15 - 16	705 HS	657 LS
GSX-S	750	Right	15 - 16	704 HS	
GSX-S	750		17 - 19	782 HS*	657 LS
GSX-S	750	Z Left	15 - 16	705 HS	657 LS
GSX-S	750	Z Right	15 - 16	704 HS	
GT	750		73 - 77	503 HF*	2098
LT-A	750	King Quad Left	08 - 14	835 SI	
LT-A	750	King Quad Right	08 - 14	836 SI	
VS	750	Intruder	86 - 91	577 HF*	2052
C50	800	Boulevard	05 - 18	704 HS	2052
M50	800	Boulevard	05 - 18	704 HS	2052
S50	800	Boulevard	05 - 18	577 HS	2052



RECOMMENDED
1xx - 2xx = Scooter Pads
5xx - 9xx = Street, Off Road & Racing Pads
2xxx = Brake Shoes



SUZUKI					
VL	800	Intruder LC Volusia	01 - 04	704 HS	2052
VS	800	Intruder	91 - 99	577 HS	2052
VX	800	L-P	90 - 93	597 HS	620 LS
VZ	800	Marauder	97 - 04	704 HS	2052
GS	850		79 - 80	511 HF*	512 HF
GS	850		81 - 82	533 HF*	512 HF
GS	850	G	83 - 86	533 HF*	512 HF
RF	900	RR,RS,RS2,T,V	94 - 97	714 HS*	701 LS
DL	1000	V-Strom Left	02 - 13	705 HS	657 LS
DL	1000	V-Strom Right	02 - 13	704 HS	
DL	1000	V-Strom	14 - 19	806 SP*	833 LS
DL	1000	V-Strom XT	17 - 19	806 SP*	833 LS
DL	1000	V-Strom XT Adventure	19 - 19	806 SP*	833 LS
G	1000	SZ	82 - 82	534 HF*	512 HF
GS	1000		78 - 79	515 HF*	512 HF
GS	1000		80 - 81	533 HF*	512 HF
GS	1000	ET	81 - 81	534 HF*	512 HF
GS	1000	EX	81 - 81	534 HF*	512 HF
GSX-R	1000		01 - 02	686 HS*	765 LS
GSX-R	1000		03 - 03	788 HS*	765 LS
GSX-R	1000		04 - 06	806 HS*	765 LS
GSX-R	1000		07 - 08	806 HS*	833 LS
GSX-R	1000		09 - 11	806 SP*	834 LS
GSX-R	1000		12 - 21	841 SP*	834 LS
GSX-R	1000	R	17 - 21	841 SP*	834 LS
GSX-S	1000		15 - 19	841 HS*	657 LS
GSX-S	1000	F	15 - 19	841 HS*	657 LS
GSX-S	1000	Katana	19 - 21	841 HS*	657 LS
SV	1000	, S	03 - 07	631 HS*	657 LS
TL	1000	RW	98 - 02	686 HS*	556 LS
TL	1000	S V-Twin	97 - 01	631 HS*	556 LS
DL	1050	V-Strom	20 - 20	806 SP*	833 LS
DL	1050	V-Strom XT	20 - 20	806 SP*	833 LS
GS	1100		81 - 81	534 HF*	512 HF
GS	1100		82 - 83	533 HF	512 HF
GS	1100	ED, ESD, GD	83 - 83	534 HF*	512 HF
GS	1100	G	86 - 88	534 HF*	512 HF
GS	1100	GKD, SD, GLD	83 - 83	534 HF*	512 HF
GS	1100	L	79 - 79	534 HF*	512 HF
GSX	1100	F	93 - 96	620 HS*	556 LS
GSX	1100	G	94 - 95	597 HS*	615 LS
GSX	1100	G Left	96 - 98	705 HS	556 LS
GSX	1100	G Right	96 - 98	704 HS	
GSX	1100	Katana	93 - 93	624 HS*	556 LS
GSX-R	1100		86 - 88	577 HF*	556 HF
GSX-R	1100		89 - 92	624 HS*	556 LS
GSX-R	1100		93 - 97	686 HS*	556 LS
GT	1100		80 - 80	534 HF*	512 HF
GS	1150	EG	86 - 87	577 HF*	577 HF
GS	1150	ES	84 - 85	577 HF*	577 HF
GSF	1200	Bandit	95 - 96	624 HS*	556 LS
GSF	1200	Bandit	97 - 00	714 HS*	556 LS
GSF	1200	Bandit	01 - 05	686 HS*	556 LS
GSF	1200	Bandit	06 - 06	631 HS*	657 LS
GSF	1200	S Bandit	01 - 05	686 HS*	556 LS
GSF	1200	S Bandit	06 - 06	631 HS*	657 LS
GV	1200	GLG Madura	86 - 86	533 HF*	512 HF
GSF	1250	A Bandit	07 - 18	631 HS*	657 LS
GSF	1250	Bandit	06 - 18	631 HS*	657 LS
GSF	1250	F Bandit	12 - 18	631 HS*	657 LS
GSF	1250	S Bandit	06 - 18	631 HS*	657 LS
GSF	1250	SA Bandit	07 - 18	631 HS*	657 LS
GSX	1250	FA Bandit	16 - 18	631 HS*	657 LS
GSX	1250	FA Traveller	15 - 16	631 HS*	657 LS
	1300	B-King	07 - 07	838 HS*	657 LS
GSX-R	1300	Hayabusa	99 - 07	686 HS*	556 LS
GSX-R	1300	Hayabusa	08 - 12	806 HS*	833 LS
GSX-R	1300	Hayabusa	13 - 21	841 HS*	833 LS

* = 2 sets required / 2 jeux pour l'Avant.
Full compound selection, see under "Brake pad 1:1 Drawings" / Sélection complète de composés, voir "1:1 Schémas Plaquettes de frein".

RECOMMENDED
1xx - 2xx = Scooter Pads
5xx - 9xx = Street, Off Road & Racing Pads
2xxx = Brake Shoes

SUZUKI					
	1340	B-King	08 - 14	782 HS*	833 LS
GL	1400	Cavalcade	87 - 88	620 HF*	577 HF
GSX	1400		02 - 07	686 HS*	765 LS
GV	1400	Cavalcade	85 - 86	534 HF*	512 HF
GV	1400	Cavalcade LXE	87 - 90	577 HS*	577 LS
S83	1400	Boulevard	05 - 10	577 HS	577 LS
C	1500	T Intruder	13 - 18	627 HS	886 LS
C90	1500	Boulevard Left	05 - 18	705 HS	789 LS
C90	1500	Boulevard Right	05 - 18	704 HS	
C90	1500	Boulevard B.O.S.S.	13 - 18	627 HS	886 LS
M90	1500	Left	09 - 18	705 HS	886 LS
M90	1500	Right	09 - 18	704 HS	
VL	1500	Intruder LC	98 - 01	577 HS	577 LS
VL	1500	Intruder LC Left	02 - 02	705 HS	789 LS
VL	1500	Intruder LC Right	02 - 02	704 HS	
M95	1600	Boulevard	05 - 07	788 HS*	886 LS
VZ	1600	Marauder	04 - 04	686 HS*	886 LS
C109R	1800		08 - 12	828 HS*	920 LS
M	1800	R Intruder	06 - 16	806 HS*	920 LS
M109R	1800		06 - 18	806 HS*	920 LS
M109R	1800	BOSS	14 - 14	806 HS*	920 LS
M109R2	1800		08 - 16	806 HS*	920 LS
SWM					
	125	Ace of Spades	20 - 20	873 HF	
	125	Gran Milano Outlaw	20 - 20	873 HF	791 HF
	125	Outlaw	20 - 20	873 HF	
	125	Varez	20 - 20	873 HF	791 HF
RS	125	R	20 - 20	873 HF	791 HF
SM	125	R	20 - 20	873 HF	791 HF
RS	300	R	15 - 20	671 SI	791 SI
	400	Varez	20 - 20	900 HS	791 HF
	440	Gran Milano	15 - 17	627 HS	
	440	Gran Milano	18 - 18	762 HS	
	440	Gran Turismo	15 - 17	627 HS	
	440	Silver Vase	15 - 17	627 HS	
SM	450	R	15 - 17	762 HS	791 HF
	500	Ace of Spades	20 - 20	762 HS	791 HF
	500	Gran Milano Outlaw	20 - 20	762 HS	791 HF
RS	500	R	15 - 20	671 SI	791 SI
SM	500	R	18 - 20	762 HS	791 HF
	600	Superdual GT Pack	18 - 18	674 HS	675 LS
	600	Superdual T	18 - 20	674 HS	675 LS
	600	Superdual X	18 - 20	674 HS	675 LS
	650	Superdual	15 - 18	762 HS	675 LS
SYM					
	50	Allo	11 - 15	140 HF	
	50	Bullet	93 - 93	110 HF	
	50	Cinderella	01 - 00	110 HF	
	50	Crox	14 - 15	140 CT	
	50	Feel-big	98 - 98	618 HF	
	50	Fiddle	09 - 14	140 HF	2012
	50	Fiddle III	16 - 19	140 CT	202 CT
	50	Jet 4 Naked	11 - 13	140 HF	
	50	Jet 4 R	11 - 13	140 HF	
	50	Jet BasiX	07 - 09	140 HF	
	50	Jet Euro X	05 - 12	140 HF	
	50	Jet Sport X	06 - 14	140 HF	
	50	Jet Sport X SR	06 - 14	140 HF	129 HF
	50	Jet, Alpha	95 - 97	140 HF	2012
	50	Jungle	96 - 02	140 HF	2012
	50	Mask	00 - 05	140 HF	2012
	50	Mask LC	00 - 05	140 HF	2012
	50	Mio	05 - 16	110 HF	2057
	50	Orbit II	12 - 13	140 HF	
	50	Pure	98 - 98	618 HF	
	50	Red Devil	97 - 09	140 HF	2012

RECOMMENDED
1xx - 2xx = Scooter Pads
5xx - 9xx = Street, Off Road & Racing Pads
2xxx = Brake Shoes

SYM					
	50	Super Fancy	95 - 97	140 HF	2012
	50	Super Fancy	98 - 06	115 HF	
	50	Symphony	09 - 15	140 HF	
	50	Symphony SR	11 - 15	140 HF	
	50	Symphony ST	15 - 15	140 CT	
	50	Symply	08 - 14	140 HF	
	50	X'Pro	13 - 17	140 HF	
DD	50		02 - 12	110 HF	2057
RS	50		05 - 09	178 HF	2012
RS21	50		02 - 09	178 HF	
	100	Cinderella	01 - 01	110 HF	
	100	Jet	00 - 00	140 HF	
	100	Jet Euro X	05 - 05	140 HF	
	100	Jet Sport X	05 - 05	140 HF	
	100	Mio	05 - 16	110 HF	
	100	Party	97 - 00	140 HF	
	100	Super Fancy	95 - 00	140 HF	2012
	110	Bullet	93 - 93	542 HF	
	110	Star	03 - 03	140 HF	
	125	Aero Wolf	02 - 02	542 HF	
	125	Allo	11 - 15	140 CT	
	125	Attila	95 - 02	708 HF	2012
	125	Citycom	09 - 14	140 CT	
	125	Crox	14 - 15	140 CT	
	125	Euro MX	03 - 04	178 CT	
	125	Fiddle	09 - 16	140 CT	
	125	Fiddle III	16 - 19	140 CT	202 CT
	125	GTS	07 - 11	146 CT	
	125	Husky	96 - 98	135 CT	2188
	125	Husky	99 - 05	150 CT	
	125	Jet 14	17 - 19	140 CT	202 CT
	125	Jet 4	11 - 13	140 HF	
	125	Joymax Sport	16 - 16	146 CT	201 CT
	125	Joyride	01 - 06	178 CT	154 CT
	125	Joyride	07 - 09	178 CT	201 CT
	125	Joyride Evo	10 - 12	178 CT	201 CT
	125	Joyride S	16 - 17	178 CT	201 CT
	125	Megalo	02 - 05	140 CT	
	125	New Duke	02 - 07	140 CT	
	125	Super Duke	95 - 01	140 CT	2188
	125	Symphony	09 - 15	140 CT	
	125	Symphony EX	17 - 17	140 CT	
	125	Symphony S	11 - 17	140 CT	202 CT
	125	Symphony SR	11 - 17	140 CT	202 CT
	125	Symphony ST	15 - 19	140 CT	202 CT
	125	Symply	08 - 14	140 CT	
	125	Voyager	05 - 05	171 CT	
	125	Wolf Classic	05 - 05	551 HF	
	125	Wolf Legend	02 - 05	103 CT	
	125	X'Pro	14 - 16	140 CT	
HD	125		04 - 10	154 CT	
HD	125	Evo DT	10 - 10	140 CT	201 CT
HD2	125	Evo	14 - 14	140 CT	201 CT
NH	125	T	19 - 19	663 HF	
NH	125	X	19 - 19	663 HF	
RS	125		05 - 06	178 CT	119 CT
RS21	125	, R	02 - 02	178 CT	
SB	125	Wolf Ni	11 - 13	847 HF	810 HF
VS	125		07 - 13	792 HF	
VS	125		09 - 13	178 CT	
	150	Attila	00 - 03	140 CT	
	150	Crox	14 - 16	140 CT	
	150	Euro MX	03 - 06	178 CT	
	150	Husky	99 - 02	150 CT	2188
	150	Jet 4	11 - 14	140 HF	
	150	Joyride	01 - 06	178 CT	154 CT
	150	Super Duke	96 - 01	140 CT	2012
	150	Symphony S	11 - 15	140 CT	202 CT

* = 2 sets required / 2 jeux pour l'Avant.
Full compound selection, see under "Brake pad 1:1 Drawings" / Sélection complète de composés, voir "1:1 Schémas Plaquettes de frein".

				RECOMMENDED 1xx - 2xx = Scooter Pads 5xx - 9xx = Street, Off Road & Racing Pads 2xxx = Brake Shoes	
SYM					
	150	Symphony SR	11 - 15	140 CT	202 CT
H01	150		95 - 00	708 HF	
RS	150		05 - 06	178 CT	119 CT
VS	150		07 - 15	792 HF	
MF	180		03 - 03	551 HF	
	200	Fiddle II	11 - 13	140 CT	
	200	Fiddle III	16 - 19	140 CT	202 CT
	200	Joyride	01 - 08	178 CT	154 CT
	200	Joyride Evo	09 - 15	140 CT	
	200	Joyride S	16 - 17	178 CT	201 CT
	200	Quadlander	12 - 13	810 SI*	847 SI
	200	Trackrunner	05 - 08	810 SI*	847 SI
HD	200		04 - 06	154 CT	
HD	200	Evo	07 - 13	140 CT	201 CT
HD2	200	Evo	14 - 14	140 CT	201 CT
	250	GTS	07 - 11	146 MS	201 MS
	250	Joymax	07 - 10	171 MS	201 MS
	250	Joymax Sport	16 - 17	146 MS	201 MS
	250	Quadlander	06 - 07	810 SI*	847 SI
	250	Voyager	05 - 05	171 MS	
RV	250	Efi	10 - 10	171 MS	201 MS
SN	250	Ni Wolf	14 - 15	893 HF	810 HF
SN	250	T2 Wolf	12 - 15	893 HF	
	300	City Max	06 - 07	810 SI*	847 SI
	300	Citycom	09 - 15	140 CT	140 CT
	300	Citycom S	15 - 17	140 CT	140 CT
	300	Cruisym	17 - 17	215 MS	201 MS
	300	Joymax Evo	10 - 12	171 MS	201 MS
	300	Joymax Sport	16 - 17	171 MS	201 MS
	300	Joyride Evo i	10 - 10	146 MS	201 MS
	300	Quadlander	06 - 13	810 SI*	810 SI
	300	Wolf Cafe Racer	15 - 15	893 HF	810 HF
	300	Wolf Classic	15 - 15	893 HF	810 HF
GTS	300		09 - 13	171 MS	201 MS
GTS	300	Evo i	11 - 15	146 MS	201 MS
SB	300	Cafe Racer	16 - 17	893 HF	810 HF
	400	i Maxsym	11 - 11	214 MS*	218 MS
	400	i Maxsym	12 - 17	215 MS*	218 MS
	465	Maxsym TL	20 - 20	215 MS*	218 MS
	500	GT	07 - 04	146 MS	154 MS
	600	i Maxsym	14 - 19	215 MS*	218 MS
	600	i Maxsym Sport	18 - 19	215 MS*	218 MS
	600	Quad Raider	08 - 15	810 SI*	810 SI
TGB					
	50	101R	05 - 09	101 HF	
	50	101S	99 - 02	101 HF	
	50	202T	99 - 02	101 HF	2188
	50	203	05 - 08	163 HF	
	50	303R	99 - 14	101 HF	
	50	309 Racing	05 - 05	101 HF	
	50	507	05 - 05	101 HF	
	50	Akros	99 - 04	101 HF	
	50	Akros tec 5	99 - 04	163 HF	
	50	Apollo	99 - 03	163 HF	
	50	Buffalo	03 - 03		688 HF
	50	Bull&t RS/RR	11 - 17	203 HF	101 HF
	50	Bullet	09 - 09	101 HF	101 HF
	50	Bullet	10 - 12	203 HF	
	50	Bunny	97 - 00	101 HF	
	50	Corona	03 - 05	132 HF	
	50	Double X	05 - 05	101 HF	
	50	Ergon	96 - 00	101 HF	
	50	Fire, Sky	03 - 05	163 HF	
	50	Hawk	09 - 14	101 HF	
	50	Hiw's	99 - 99	101 HF	
	50	Hook	10 - 12	101 HF	
	50	J409	00 - 03	101 HF	

				RECOMMENDED 1xx - 2xx = Scooter Pads 5xx - 9xx = Street, Off Road & Racing Pads 2xxx = Brake Shoes	
TGB					
	50	Tapo RS	11 - 12	101 HF	
	50	Trigger	99 - 03	101 HF	
GT	50	Veloce	09 - 12	141 HF	
R	50	X	06 - 14	132 HF	101 HF
	90	101S	99 - 02	101 HF	
	90	202T	99 - 02	101 HF	
	90	Akros	99 - 99	101 HF	
	90	Apollo	99 - 02	163 HF	
	90	Ergon	99 - 02	101 HF	
	90	Hiw's	99 - 99	101 HF	
	90	Trigger	99 - 02	101 HF	
	125	101S	99 - 03	101 CT	
	125	202T	99 - 99	101 CT	
	125	303R	99 - 08	101 CT	
	125	309 RS	00 - 00	101 HF	
	125	Bull&t RS/RR	11 - 14	203 HF	101 HF
	125	Hook	10 - 10	101 HF	
	125	X-Large	11 - 11	210 CT	201 CT
	125	X-Motion	08 - 12	210 CT	201 CT
	250	Dynasty	06 - 06	163 CT	111 CT
	250	X-Motion	08 - 09	210 MS	201 CT
	300	X-Motion	10 - 12	210 MS	201 CT
TM					
	80	Cross	96 - 00	671 RSI	675 RSI
	80	Junior	96 - 00	544 RSI	592 RSI
MX	85		01 - 12	671 RSI	604 RSI
MX	85		13 - 20	777 RSI	777 RSI
SM	85		18 - 19	777 RSI	777 RSI
EN	125	Enduro	01 - 04	671 SI	604 SI
EN	125	Enduro	05 - 17	671 SI	790 SI
MX	125		96 - 00	671 RSI	675 RSI
MX	125		01 - 04	671 RSI	604 RSI
MX	125		05 - 20	671 RSI	790 RSI
SMR	125		05 - 05	566 RSI	604 RSI
	250	E	95 - 00	671 RSI	675 RSI
EN	250	Enduro	01 - 04	671 SI	604 SI
EN	250	Enduro	05 - 15	671 SI	790 SI
EN	250	F Enduro	00 - 00	671 SI	675 SI
EN	250	F Enduro	01 - 04	671 SI	604 SI
EN	250	F Enduro	05 - 17	671 SI	790 SI
MX	250		01 - 04	671 RSI	604 RSI
MX	250		05 - 20	671 RSI	790 RSI
MX	250	F	01 - 04	671 RSI	604 RSI
MX	250	F	05 - 20	671 RSI	790 RSI
EN	300	Enduro	01 - 04	671 SI	604 SI
EN	300	Enduro	05 - 05	671 SI	790 SI
FT	300		17 - 19	671 RSI	790 RSI
MX	300		98 - 00	671 RSI	675 RSI
MX	300		01 - 04	671 RSI	604 RSI
MX	300		05 - 20	671 RSI	790 RSI
	320		96 - 97	671 RSI	675 RSI
	400	F	00 - 00	671 RSI	675 RSI
	400	F	01 - 01	671 RSI	604 RSI
	400	F Enduro	01 - 01	671 SI	604 SI
SMF	400	F	02 - 02	566 RSI	604 RSI
SMR	400	F	03 - 03	566 RSI	604 RSI
EN	450	F Enduro	02 - 04	671 SI	604 SI
EN	450	F Enduro	05 - 17	671 SI	790 SI
FT	450	Fi	17 - 19	671 RSI	790 RSI
MX	450	F	02 - 04	671 RSI	604 RSI
MX	450	F	05 - 20	671 RSI	790 RSI
SMR	450	F	04 - 04	566 RSI	604 RSI
SMX	450	F	03 - 03	566 RSI	604 RSI
SMX	450	F	04 - 04	762 RST	604 RSI
EN	530	F Enduro	01 - 04	671 SI	604 SI
EN	530	F Enduro	05 - 05	671 SI	790 SI
FT	530	Fi	17 - 19	671 RSI	790 RSI

* = 2 sets required / 2 jeux pour l'Avant.
Full compound selection, see under "Brake pad 1:1 Drawings" / Sélection complète de composés, voir "1:1 Schémas Plaquettes de frein".

				RECOMMENDED 1xx - 2xx = Scooter Pads 5xx - 9xx = Street, Off Road & Racing Pads 2xxx = Brake Shoes	
TM					
MX	530	F	01 - 04	671 RSI	604 RSI
MX	530	F	05 - 20	671 RSI	790 RSI
SMR	530	F	03 - 03	566 RSI	604 RSI
SMX	600	F	03 - 03	566 RSI	604 RSI
SMX	660	F	04 - 04	762 RST	604 RSI
TOMOS					
	50	Hip Hop	06 - 08	105 HF	
	50	Racing	06 - 08	105 HF	
	50	Revival	02 - 04	123 HF	
	50	Street Soul	06 - 08	105 HF	
	50	Streetmate	03 - 05	123 HF	
	50	Youngst'r	06 - 08	105 HF	
BT	50	S	89 - 89	595 HF	
MC	50	Senior Pro	04 - 06	667 HF	667 HF
N	50	AT, BT	91 - 95	595 HF	
SE	50		05 - 06	148 HF	105 HF
CTX	80		89 - 89	595 HF	
MC	125	T	06 - 08	817 HF	559 HF
SE	125		05 - 08	817 HF	559 HF
SM	125	F	06 - 08	821 HS	559 HF
TRIUMPH					
	600	Daytona	03 - 04	624 HS*	614 LS
	600	Speed Four	03 - 06	624 HS*	614 LS
TT	600		00 - 03	624 HS*	614 LS
	650	Daytona	05 - 06	624 HS*	614 LS
	660	Street Triple S A2	17 - 20	627 HS*	675 LS
	675	Daytona	06 - 08	782 HS*	614 LS
	675	Daytona R Triple	11 - 12	901 HS*	614 LS
	675	Daytona R Triple	13 - 18	901 HS*	675 LS
	675	Daytona Triple	09 - 12	864 HS*	614 LS
	675	Daytona Triple	13 - 18	864 HS*	675 LS
	675	Street Triple	08 - 12	627 HS*	614 LS
	675	Street Triple	13 - 17	627 HS*	675 LS
	675	Street Triple R	09 - 12	782 HS*	614 LS
	675	Street Triple R	13 - 17	782 HS*	675 LS
	675	Street Triple RX	15 - 16	782 HS*	675 LS
	750	Bonneville	84 - 84	554 HF	
	750	Bonneville U.K.	87 - 87	506 HF*	506 HF
	750	Daytona	91 - 92	624 HS*	633 LS
	750	Trident Left	91 - 98	611 HS	611 LS
	750	Trident Right	91 - 98	638 HS	
	750	Trident T160V	75 - 77	523 HF	523 HF
T140	750	D,E,F,V Bonneville	76 - 81	523 HF	523 HF
T140	750	ES Bonneville	81 - 83	523 HF*	523 HF
TR65	750	Thunderbird	81 - 83	523 HF	
TR7T	750	Tiger Trail	81 - 83	523 HF	
TR7V	750	Tiger	73 - 81	523 HF	523 HF
TSS	750		83 - 83	523 HF*	523 HF
TSS	750	Electro Eight Valve	84 - 84	523 HF	
TSX	750		83 - 83	523 HF	523 HF
	765	Daytona Moto2	20 - 20	901 SP*	675 LS
	765	Street Triple R	17 - 20	900 HS*	675 LS
	765	Street Triple R Low	17 - 18	900 HS*	675 LS
	765	Street Triple RS	17 - 20	901 HS*	675 LS
	765	Street Triple S	17 - 20	627 HS*	675 LS
	800	America	03 - 06	627 HS	611 LS
	800	Bonneville	01 - 04	627 HS	611 LS
	800	Bonneville America	02 - 06	627 HS	611 LS
	800	Bonneville T100			
		Centennial Edition	02 - 04	627 HS	611 LS
	800	Bonneville T100			
		Paul Smith	06 - 08	627 HS	611 LS
	800	Speedmaster	03 - 04	627 HS*	611 LS
	800	Tiger	11 - 14	627 HS*	614 LS
	800	Tiger XC	11 - 17	627 HS*	614 LS
	800	Tiger XC ABS	12 - 14	627 HS*	614 LS

				RECOMMENDED 1xx - 2xx = Scooter Pads 5xx - 9xx = Street, Off Road & Racing Pads 2xxx = Brake Shoes	
TRIUMPH					
	800	Tiger XCA	15 - 17	627 HS*	614 LS
	800	Tiger XCA	18 - 18	671 HS*	614 LS
	800	Tiger XCR	15 - 17	627 HS*	614 LS
	800	Tiger XCX	18 - 20	671 HS*	614 LS
	800	Tiger XR	15 - 18	627 HS*	614 LS
	800	Tiger XRT	15 - 17	627 HS*	614 LS
	800	Tiger XRT	18 - 18	671 HS*	614 LS
	800	Tiger XRX	15 - 17	627 HS*	614 LS
	800	Tiger XRX	18 - 18	671 HS*	614 LS
	800	Tiger XRX Low	18 - 20	671 HS*	614 LS
	900	Adventurer	96 - 02	627 HS	630 LS
	900	America	07 - 16	627 HS	611 LS
	900	Bonneville	05 - 08	627 HS	638 LS
	900	Bonneville	09 - 11	627 HS	611 LS
	900	Bonneville Newchurch	15 - 15	627 HS	611 LS
	900	Bonneville SE	09 - 13	627 HS	611 LS
	900	Bonneville Spirit	15 - 15	627 HS	611 LS
	900	Bonneville Street Cup	17 - 18	627 HS	611 LS
	900	Bonneville T100	05 - 20	627 HS	611 LS
	900	Bonneville T100 Black	16 - 20	627 HS	611 LS
	900	Bonneville T214	15 - 15	627 HS	611 LS
	900	Daytona	91 - 94	624 HS*	633 LS
	900	Daytona	94 - 98	624 HS*	638 LS
	900	Daytona Super III	94 - 98	683 HS*	633 LS
	900	Daytona, Sprint Left	93 - 93	611 HS	611 LS
	900	Daytona, Sprint Right	93 - 93	638 HS	
	900	Legend TT	99 - 01	627 HS	630 LS
	900	Scrambler	06 - 16	627 HS	611 LS
	900	Speed Triple	94 - 96	624 HS*	638 LS
	900	Speedmaster	05 - 15	627 HS*	611 LS
	900	Sprint	94 - 98	624 HS*	638 LS
	900	Street Cup	17 - 20	627 HS	611 LS
	900	Street Scrambler	17 - 18	627 HS	611 LS
	900	Street Scrambler	19 - 20	762 HS	611 LS
	900	Street Twin	16 - 18	627 HS	611 LS
	900	Street Twin	19 - 20	762 HS	611 LS
	900	T100 Bud Ekins	20 - 20	627 HS	611 LS
	900	Thruxton	04 - 05	627 HS	611 LS
	900	Thruxton Ace	15 - 15	627 HS	611 LS
	900	Thunderbird	96 - 05	627 HS	630 LS
	900	Thunderbird Sport	03 - 04	627 HS*	630 LS
	900	Tiger Left	93 - 98	611 HS	611 LS
	900	Tiger Right	93 - 98	638 HS	
	900	Tiger	99 - 00	627 HS*	630 LS
	900	Trident Left	91 - 98	611 HS	611 LS
	900	Trident Right	91 - 98	638 HS	
	900	Trophy Left	91 - 95	611 HS	611 LS
	900	Trophy Right	91 - 95	638 HS	
	900	Trophy	96 - 03	624 HS*	633 LS
T509	900	Speed Triple	97 - 01	624 HS*	611 LS
T595	950	Daytona	96 - 98	624 HS*	611 LS
	955	Daytona Centennial	02 - 04	624 HS*	611 LS
	955	Daytona			
		from VIN 132513	99 - 01	624 HS*	614 LS
	955	Daytona to VIN 132512	99 - 06	624 HS*	611 LS
	955	Speed Triple	99 - 06	624 HS*	611 LS
	955	Sprint RS	00 - 05	624 HS*	611 LS
	955	Sprint ST	99 - 04	624 HS*	611 LS
	955	Tiger	01 - 03	627 HS*	627 LS
	955	Tiger	04 - 06	627 HS*	638 LS
	1000	Daytona	92 - 92	624 HS*	633 LS
	1000	Trophy Left	91 - 95	611 HS	611 LS
	1000	Trophy Right	91 - 95	638 HS	
	1050	Speed 94	15 - 16	762 HS*	611 LS
	1050	Speed 94R	15 - 16	901 HS*	611 LS
	1050	Speed Triple	05 - 07	782 HS*	611 LS
	1050	Speed Triple	08 - 15	762 HS*	611 LS
	1050	Speed Triple	16 - 17	901 HS*	611 LS

* = 2 sets required / 2 jeux pour l'Avant.
Full compound selection, see under "Brake pad 1:1 Drawings" / Sélection complète de composés, voir "1:1 Schémas Plaquettes de frein".



RECOMMENDED
1xx - 2xx = Scooter Pads
5xx - 9xx = Street, Off Road & Racing Pads
2xxx = Brake Shoes




TRIUMPH					
	1050	Speed Triple R	12 - 18	901 HS*	611 LS
	1050	Speed Triple RS	16 - 20	901 HS*	611 LS
	1050	Speed Triple S	16 - 20	901 HS*	611 LS
	1050	Sprint GT ABS	10 - 15	624 HS*	611 LS
	1050	Sprint GT SE ABS	10 - 15	624 HS*	611 LS
	1050	Sprint ST	05 - 11	624 HS*	611 LS
	1050	Tiger	07 - 13	782 HS*	638 LS
	1050	Tiger SE	09 - 13	782 HS*	638 LS
	1050	Tiger Sport	15 - 19	782 HS*	611 LS
	1200	Bonneville Bobber	17 - 20	627 HS	614 LS
	1200	Bonneville Bobber Black	18 - 19	671 HS*	614 LS
	1200	Bonneville T120	16 - 20	627 HS	611 LS
	1200	Bonneville T120 Ace	19 - 20	627 HS	611 LS
	1200	Bonneville T120 Black	16 - 20	627 HS	611 LS
	1200	Bonneville T120 Diamond Ed.	19 - 20	627 HS	611 LS
	1200	Daytona	91 - 97	624 HS*	633 LS
	1200	Scrambler XC	19 - 20	901 HS*	674 LS
	1200	Scrambler XE	19 - 20	901 HS*	674 LS
	1200	Speed Twin	20 - 20	762 SP*	611 LS
	1200	Speedmaster	18 - 19	671 HS*	614 LS
	1200	T120 Bud Ekins	20 - 20	627 HS	611 LS
	1200	Thruxton	16 - 19	627 HS*	611 LS
	1200	Thruxton R	16 - 19	901 HS*	611 LS
	1200	Thruxton RS	20 - 20	901 SP*	611 LS
	1200	Tiger Explorer	12 - 15	624 SP*	611 LS
	1200	Tiger Explorer	16 - 17	900 SP*	611 LS
	1200	Tiger XCA	18 - 20	900 SP*	611 LS
	1200	Tiger XCX	18 - 20	900 SP*	611 LS
	1200	Tiger XR	18 - 19	900 SP*	611 LS
	1200	Tiger XRT	18 - 20	900 SP*	611 LS
	1200	Tiger XRX	18 - 20	900 SP*	611 LS
	1200	Tiger XRX Low	18 - 20	900 SP*	611 LS
	1200	Trophy Left	91 - 95	611 HS	611 LS
	1200	Trophy Right	91 - 95	638 HS	
	1200	Trophy	96 - 03	624 HS*	633 LS
	1200	Trophy SE	13 - 18	740 HS*	611 LS
	1600	Thunderbird	09 - 18	624 HS*	674 LS
	1700	Thunderbird Commander	14 - 18	624 HS*	674 LS
	1700	Thunderbird LT	14 - 18	624 HS*	674 LS
	1700	Thunderbird Nightstorm	14 - 18	624 HS*	674 LS
	1700	Thunderbird Storm	11 - 18	624 HS*	674 LS
	2300	Rocket III	04 - 13	624 HS*	674 LS
	2300	Rocket III Classic	07 - 13	624 HS*	674 LS
	2300	Rocket III Roadster	10 - 18	624 HS*	674 LS
	2300	Rocket III Touring	13 - 14	624 HS*	674 LS
	2300	Rocket X	15 - 15	624 HS*	674 LS
	2500	Rocket III GT	19 - 20	841 SP*	900 SP
	2500	Rocket III R	19 - 20	841 SP*	900 SP
TRS					
	125	ONE	19 - 20	963 RSI	803 RSI
	125	RR ONE	19 - 20	963 RSI	803 RSI
	250	ONE	16 - 19	802 RSI	803 RSI
	250	RR ONE	19 - 20	963 RSI	803 RSI
	280	ONE	16 - 19	802 RSI	803 RSI
	280	RR ONE	19 - 20	963 RSI	803 RSI
	300	ONE	16 - 19	802 RSI	803 RSI
	300	RR ONE	19 - 20	963 RSI	803 RSI
VERTEMATI					
C	500	Cross	02 - 04	671 RSI	675 RSI
E	501	Enduro	02 - 04	671 SI	675 SI
S	501	Supermotard	02 - 04	671 HF	675 HF



RECOMMENDED
1xx - 2xx = Scooter Pads
5xx - 9xx = Street, Off Road & Racing Pads
2xxx = Brake Shoes




VERTIGO					
	300	Combat Camo Works	15 - 19	939 RSI	803 RSI
	300	Combat Ice Hell	15 - 19	939 RSI	803 RSI
	300	Combat RR	15 - 19	939 RSI	803 RSI
VICTORY					
		Empulse TT	16 - 17	706 H.HS*	730 LS
	1200	Octane	17 - 17	674 H.HS	675 H.LS
	1500	Kingpin	04 - 05	706 H.HS	674 H.LS
	1500	Touring Cruiser	03 - 06	706 H.HS*	674 H.LS
	1500	V92C Cruiser	98 - 02	706 H.HS	674 H.LS
	1500	V92C Deluxe	01 - 02	706 H.HS	674 H.LS
	1500	V92SC Sport Cruiser	00 - 02	706 H.HS*	674 H.LS
	1500	Vegas	03 - 05	706 H.HS	674 H.LS
	1500	Vegas 8-Ball	05 - 05	706 H.HS	674 H.LS
	1634	Hammer	05 - 07	706 H.HS	674 H.LS
	1634	Hammer	08 - 08	782 H.HS*	630 H.LS
	1634	Hammer S	06 - 08	706 H.HS	674 H.LS
	1634	Kingpin	06 - 07	706 H.HS	674 H.LS
	1634	Kingpin all models	08 - 12	782 H.HS	630 H.LS
	1634	Kingpin Tour	06 - 07	706 H.HS	674 H.LS
	1634	Vegas	06 - 07	706 H.HS	674 H.LS
	1634	Vegas	08 - 17	782 H.HS	630 H.LS
	1634	Vegas 8-Ball	06 - 07	706 H.HS	674 H.LS
	1634	Vegas 8-Ball	08 - 17	782 H.HS	630 H.LS
	1634	Vegas Jackpot	06 - 07	706 H.HS	674 H.LS
	1634	Vegas Jackpot	08 - 08	782 H.HS	630 H.LS
	1731	Boardwalk	13 - 15	782 H.HS	630 H.LS
	1731	Cross Country	10 - 17	782 H.HS*	630 H.LS
	1731	Cross Country 8-Ball	14 - 16	782 H.HS*	630 H.LS
	1731	Cross Country Tour	12 - 17	782 H.HS*	630 H.LS
	1731	Cross Roads	10 - 12	782 H.HS*	630 H.LS
	1731	Cross Roads 8-Ball	14 - 14	782 H.HS*	630 H.LS
	1731	Cross Roads Classic	14 - 14	782 H.HS*	630 H.LS
	1731	Gunner	15 - 17	782 H.HS	630 H.LS
	1731	Hammer	09 - 11	782 H.HS*	630 H.LS
	1731	Hammer 8-Ball	10 - 16	782 H.HS*	630 H.LS
	1731	Hammer S	09 - 17	782 H.HS*	630 H.LS
	1731	Hard-Ball	12 - 13	782 H.HS*	630 H.LS
	1731	High-Ball	12 - 17	782 H.HS	630 H.LS
	1731	Jackpot	10 - 16	782 H.HS	630 H.LS
	1731	Judge	13 - 17	782 H.HS	630 H.LS
	1731	Kingpin	10 - 12	782 H.HS	630 H.LS
	1731	Kingpin 8-Ball	10 - 11	782 H.HS	630 H.LS
	1731	Magnum	15 - 17	782 H.HS*	630 H.LS
	1731	Magnum X-1	15 - 17	782 H.HS*	630 H.LS
	1731	Vegas	10 - 17	782 H.HS	630 H.LS
	1731	Vegas 8-Ball	10 - 17	782 H.HS	630 H.LS
	1731	Vegas Jackpot	09 - 09	782 H.HS	630 H.LS
	1731	Vision all models	08 - 17	735 H.HS*	630 H.LS
VOR					
	400	Cross	00 - 01	671 RSI	675 RSI
	400	Enduro	00 - 01	671 SI	675 SI
EN	400		02 - 03	671 SI	675 SI
MX	400		02 - 02	671 RSI	675 RSI
SM	400		02 - 02	566 RSI	675 RSI
EN	450		02 - 04	671 SI	675 SI
MX	450		02 - 04	671 RSI	675 RSI
SM	450		02 - 04	566 RSI	675 RSI
	500	492 Enduro	99 - 99	671 SI	675 SI
	500	492 Super Motard	00 - 01	566 HF	675 HF
	500	495 Cross	99 - 99	671 RSI	675 RSI
EN	530		02 - 04	671 SI	675 SI
MX	530		02 - 04	671 RSI	675 RSI
SM	530		02 - 04	566 RSI	675 RSI

* = 2 sets required / 2 jeux pour l'Avant.
Full compound selection, see under "Brake pad 1:1 Drawings" / Sélection complète de composés, voir "1:1 Schémas Plaquettes de frein".

				RECOMMENDED 1xx - 2xx = Scooter Pads 5xx - 9xx = Street, Off Road & Racing Pads 2xxx = Brake Shoes	
YAMAHA					
	50	AJP Caliper			
		incl. pin/spring	91 - 19	188 HF	
	50	Axis Pro Foot	92 - 99	111 HF	2012
BW	50		91 - 94	2050	2050
BW	50		03 - 05	619 HF	
BW	50	Bump	97 - 02	123 HF	2050
BW	50	Next Generation	96 - 07	123 HF	2050
BW	50	Sports Spec R	02 - 06	123 HF	
BW	50	Spy	95 - 03	123 HF	2050
CA	50	Riva Salient	83 - 86	2112	2021
CG	50	A, B Riva Jog	90 - 91	2112	2021
CR	50	Target	91 - 95	111 HF	2028
CR	50	Z	91 - 95	111 HF	2050
CV	50	A/R Jog	03 - 08	206 HF	
CV	50	Jog, Jog ZR	01 - 06	165 HF	
CW	50	TA Zuma	90 - 90	2050	2050
CY	50	F Jog	94 - 94	2021	2028
DT	50	R	89 - 97	107 HF	2050
JOG	50	CY	90 - 92	2021	2050
JOG	50	E	88 - 90	2112	2021
JOG	50	R	02 - 07	111 HF	2050
JOG-Z	50		90 - 91	114 HF	2021
LB	50	Chappy	80 - 83	2032	2032
LC	50	M, Bop, G,H Champ	80 - 81	2021	2021
PW	50		80 - 95	2112	2112
PW	50	H1	96 - 20	2112	2112
QT	50	Yamahopper	79 - 87	2112	2112
RD	50	MX	81 - 87	547 HF	2032
SG	50	Sting	84 - 91	2021	2021
SH	50	E, F Razz	93 - 95	2112	2021
SH	50	Mint	93 - 96	2112	2021
SH	50	T,EMT,U,MU,W,MW, A,MA,B,D,MD	87 - 93	2112	2021
TDR	50		90 - 92	107 HF	107 HF
TRAFIC	50	M	83 - 83	2050	2050
TT-R	50		06 - 21	2010	2010
TZM	50	R	94 - 97	134 HF	107 HF
TZR	50		90 - 92	134 HF	107 HF
TZR	50		93 - 02	134 HF	137 HF
TZR	50		03 - 04	168 HF	105 HF
YE	50	Zest (Italy)	92 - 95	114 HF	2028
YFM	50	Raptor	04 - 11	2028*	2034
YM	50	Breeze, Fizz	95 - 95	114 HF	2050
YN	50	Neo's, LC	97 - 16	123 HF	2050
YSR	50		87 - 91	575 HF	2028
YSR	50		92 - 92	575 HF	2032
YW	50	Zuma	02 - 11	111 HF	
YW	50	Zuma	12 - 17	206 HF	
YZ	50		80 - 83	2182	2182
RD	60		73 - 75	2032	2032
YF	60	S Moto 4	86 - 86		2050
YT	60	Tri Zinger	84 - 85		2050
YZ	60		85 - 85	2182	2182
YZ	65		19 - 21	589 RSI	592 RSI
BW	80		86 - 90	2182	2182
YE	80	Zest (Italy)	93 - 94	114 HF	
YFM	80		87 - 88	2050*	2034
YFM	80		92 - 94	2028*	2034
YFM	80	Badger	95 - 07	2028*	2034
YFM	80	Grizzly	05 - 08	2028*	2034
YFM	80	N, S Moto 4	85 - 86		2034
YFM	80	Raptor	02 - 08	2028*	2034
YZ	80		74 - 79	2182	2032
YZ	80		80 - 85	2182	2182
YZ	80		86 - 92	589 SI	2182
YZ	80		93 - 01	589 RSI	592 RSI
YZ	85	, LW	02 - 21	589 RSI	592 RSI
JOG	90		90 - 91	111 HF	2021

				RECOMMENDED 1xx - 2xx = Scooter Pads 5xx - 9xx = Street, Off Road & Racing Pads 2xxx = Brake Shoes	
YAMAHA					
TT-R	90		00 - 10	2182	2028
YFM	90	RY Raptor	09 - 15	2028*	586 SI
	100	Aerox	00 - 06	123 HF	2034
DT	100		76 - 80	2032	2034
RS	100		75 - 80	2032	2032
RT	100	A-H	90 - 96	2028	2028
YFM	100	Champ	87 - 88	2050*	2034
YFM	100	Champ	89 - 91	2028*	2034
YZ	100		78 - 81	2032	2034
YZ	100		82 - 83	2028	2034
	110	Mio	05 - 07	165 HF	
	110	Mio Sporty	05 - 07	165 HF	
	110	Nouvo	06 - 07	165 HF	
TT-R	110		08 - 21	2182	2028
	115	D'elight	14 - 18	858 HF	
	125	Xenter	12 - 18	208 CT	2209
BWs	125		10 - 11	208 CT	2209
GPD	125	N-Max	15 - 19	226 CT	227 CT
MW	125	Tricity Left	14 - 19	222 CT	225 CT
MW	125	Tricity Right	14 - 19	223 CT	
NXC	125	Cygnus	10 - 11	207 CT	2209
NXC	125	Cygnus X	05 - 09	190 CT	2209
TT-R	125		00 - 13	2028	2028
TT-R	125	LW	00 - 20	589 SI	2028
TW	125		99 - 07	728 HF	2028
TY	125		80 - 82	2032	2034
TZ	125		97 - 00	624 DC	659 RQ
WR	125		91 - 97	611 SI	632 SI
WR	125		98 - 02	694 SI	604 SI
WR	125	R, XY	09 - 16	627 HF	675 HF
XC	125	Beluga	85 - 85	2034	2034
XC	125	Beluga, Riva	87 - 92	2115	2034
XC	125	Cygnus F	00 - 08	107 CT	2034
XC	125	F	00 - 08	107 CT	2034
XC	125	TR Cygnus, R	96 - 98	107 CT	2034
XC	125	Vity	08 - 13	858 HF	
XQ	125	Maxter	01 - 05	151 CT*	157 CT
XT	125		82 - 86	2034	2028
YBR	125		06 - 07	575 HF	2034
YBR	125		08 - 16	858 HF	2199
YFA	125	1 D, E Breeze	92 - 93	2028*	2034
YFA	125	1 F Breeze	94 - 94	2028*	2034
YFA	125	1 G-M Breeze	95 - 07	2028*	2034
YFA	125	1 W, A, B Breeze	89 - 91	2028*	2034
YFM	125	Grizzly	04 - 13	2028*	2034
YP	125	Majesty	01 - 11	151 CT	157 CT
YP	125	RA X-Max ABS	17 - 19	229 CT	230 CT
YP	125	X-Max	06 - 09	194 CT	157 CT
YP	125	X-Max	10 - 18	181 CT	157 CT
YP	125	X-Max ABS	11 - 16	181 CT	155 CT
YP	125	X-Max Business ABS	11 - 13	181 CT	155 CT
YP	125	X-Max Sport Ed.	11 - 13	181 CT	157 CT
YT	125	Tri Moto	80 - 81		617 HF
YT	125	Tri Moto	82 - 85		576 HF
YW	125	Z	10 - 11	208 CT	2209
YW	125	Zuma	09 - 11	208 CT	
YZ	125		74 - 75	2032	2034
YZ	125		76 - 82	2033	2034
YZ	125		83 - 83	2033	2049
YZ	125		84 - 84	2036	2049
YZ	125		85 - 87	580 SI	2049
YZ	125		88 - 88	580 RSI	575 RSI
YZ	125		89 - 89	611 RSI	584 RSI
YZ	125		90 - 95	611 RSI	632 RSI
YZ	125		96 - 97	611 RSI	648 RSI
YZ	125		98 - 02	694 RSI	604 RSI
YZ	125		03 - 07	694 RSI	790 RSI
YZ	125		08 - 21	840 RSI	790 RSI

* = 2 sets required / 2 jeux pour l'Avant.
Full compound selection, see under "Brake pad 1:1 Drawings" / Sélection complète de composés, voir "1:1 Schémas Plaquettes de frein".



RECOMMENDED
1xx - 2xx = Scooter Pads
5xx - 9xx = Street, Off Road & Racing Pads
2xxx = Brake Shoes




YAMAHA					
	135	Crypton X	08 - 14	858 HF	2034
	150	Xenter	12 - 18	208 CT	2209
XC	150	Fly One R	98 - 02	107 CT	2028
XQ	150	Maxter	01 - 02	151 CT*	157 CT
YP	150	Majesty	01 - 02	151 CT	157 CT
GPD	155	N-Max	15 - 19	226 CT	227 CT
XC	155	S-Max	15 - 18	181 CT	175 CT
DT	175		95 - 99	2034	2034
DT	175		00 - 00	728 HF	2034
DT	175	all models	74 - 83	2034	2034
IT	175		80 - 82	2033	2034
TY	175		77 - 80	2032	2034
YT	175	Tri Moto	82 - 83		576 HF
RT	180		90 - 93	596 HF	2034
RT	180		95 - 96	575 SI	2034
XC	180	Cygnus, Riva	83 - 85	2115	2037
SR	185	Exiter, H, J	81 - 82	2034	2028
BW	200		85 - 88	2028	2028
IT	200		84 - 85	2049	2049
IT	200		85 - 86	575 SI	2049
IT	200		86 - 86	580 HF	2049
RD	200	A, B	74 - 75	2113	2037
TT	200		86 - 89	575 HF	2028
TW	200		87 - 00	2034	2028
TW	200		01 - 21	728 HF	2028
WR	200		91 - 92	611 SI	632 SI
XC	200	Riva	87 - 91	2115	2034
XT	200		85 - 95	2034	2028
YFM	200	DXS-DXW Moto 4	86 - 87	2028*	576 HF
YFM	200	N Moto 4	85 - 89	2028*	576 HF
YFS	200	R Blaster	03 - 06	536 SI*	592 SI
YFS	200	U-P Blaster	88 - 02		637 SI
YTM	200	EK, EL Tri Moto	83 - 84		576 HF
YTM	200	ERN Tri Moto	85 - 85		576 HF
YTM	200	K-N Tri Moto	83 - 85		576 HF
TT	225	S,T	86 - 00	575 HF	2028
TT-R	225		01 - 04	575 SI	2028
XT	225		92 - 00	575 HF	2028
XT	225		01 - 01	728 HF	2028
XT	225	Serow	86 - 86	575 HF	2028
YFM	225	Moto 4	86 - 88	2028*	576 HF
YTM	225	DRN, DRS Tri Moto	85 - 86		576 HF
YTM	225	DXK, DXN Tri Moto	83 - 85		576 HF
TT-R	230		05 - 05	611 SI	2034
	250	Morphus	06 - 06	170 MS	169 MS
DT	250	all models	75 - 80	2035	2037
FZ	250	Phazer N, S	85 - 86	555 HF*	2034
FZ	250	R	85 - 85	570 HF	
FZ25	250		19 - 19	671 HF	632 HF
IT	250		80 - 82	2033	2037
IT	250		84 - 84	2036	2037
IT	250		85 - 86	575 SI	2037
RD	250		73 - 77	504 HF	2064
RD	250		77 - 77	504 HF	504 HF
RD	250		78 - 79	528 HF	528 HF
SR	250	SE	80 - 82	2035	2034
SRX	250	T, TC	87 - 87	570 HF	2037
TT	250		87 - 92	580 HF	2034
TT	250		93 - 03	611 SI	632 SI
TY	250		77 - 78	2032	2034
TY	250		81 - 81	2033	2037
TY	250		84 - 90	2049	2032
TY	250	R	91 - 92	559 HF	2032
TY	250	Z	93 - 96	559 HF	559 HF
TZ	250		82 - 85	504 HF	
TZ	250		90 - 05	624 DC*	659 RQ
WR	250		90 - 97	611 SI	632 SI
WR	250		98 - 02	694 SI	604 SI



RECOMMENDED
1xx - 2xx = Scooter Pads
5xx - 9xx = Street, Off Road & Racing Pads
2xxx = Brake Shoes




YAMAHA					
WR	250	F	01 - 02	694 SI	604 SI
WR	250	F	03 - 13	694 SI	790 SI
WR	250	F Efi	15 - 17	694 SI	790 SI
WR	250	F Efi	18 - 21	840 SI	790 SI
WR	250	F Enduro GP	18 - 18	840 SI	790 SI
WR	250	R	08 - 15	694 HS	790 LS
WR	250	X	08 - 16	627 HS	790 LS
XG	250	Tricker	05 - 11	728 HF	632 HF
XS	250	C	77 - 78	507 HF	507 HF
XS	250	C	81 - 81	2113	2066
XS	250	D, E	79 - 80	507 HF	2066
XS	250	SE, SF	80 - 81	528 HF	2066
XT	250		80 - 81	2034	2034
XT	250		08 - 08	728 HF	632 HF
XV	250	Route 66	88 - 90	550 HF	2034
XV	250	Route 66	95 - 97	691 HF	2034
XV	250	S Virago	95 - 07	691 HS	2034
XV	250	Virago	88 - 88	550 HF	2034
XV	250	Virago	89 - 94	616 HF	2034
XVS	250	V-Star	08 - 12	691 HS	2034
XVS	250	V-Star	13 - 14	691 HS	
YBR	250		07 - 11	638 HF	
YFB	250	Timberwolf	92 - 94	2028*	2035
YFB	250	Timberwolf	95 - 96	2035*	2035
YFB	250	Timberwolf 4WD	94 - 03	2035*	2035
YFM	250		89 - 91	2035*	576 SI
YFM	250	AN Bruin 2x4	05 - 07	536 SI*	
YFM	250	Bear Tracker	01 - 04	536 SI*	
YFM	250	Raptor Left	09 - 14	850 SI	592 SI
YFM	250	Raptor Right	09 - 14	849 SI	
YFM	250	Timberwolf (YFB 250 G)	95 - 95	2035*	2035
YFU1TW	250	Pro Hauler	89 - 89	2035*	2177
YFU1W	250	Pro Hauler	89 - 90	2035*	2177
YP	250	D Majesty DX	98 - 00	128 MS	155 MS
YP	250	Majesty	96 - 04	128 MS	2066
YP	250	Majesty DX/ABS	99 - 14	128 MS	155 MS
YP	250	X-Max	05 - 09	194 MS	155 MS
YP	250	X-Max	10 - 13	181 MS	155 MS
YP	250	X-Max	14 - 16	181 MS	221 MS
YTZ	250	Tri Moto	85 - 86	575 SI	575 SI
YZ	250		74 - 79	2033	2035
YZ	250		80 - 80	2033	2034
YZ	250		81 - 81	2033	2037
YZ	250		82 - 84	2036	2034
YZ	250		85 - 87	580 SI	2034
YZ	250		88 - 88	580 RSI	575 RSI
YZ	250		89 - 89	611 RSI	584 RSI
YZ	250		98 - 02	694 RSI	604 RSI
YZ	250		03 - 07	694 RSI	790 RSI
YZ	250		08 - 21	840 RSI	790 RSI
YZ	250	A	90 - 90	611 RSI	632 RSI
YZ	250	B1-J1	91 - 97	611 RSI	648 RSI
YZ	250	F	01 - 02	694 RSI	604 RSI
YZ	250	F	03 - 06	694 RSI	790 RSI
YZ	250	F	07 - 13	840 RSI	790 RSI
YZ	250	F Efi	14 - 20	840 RSI	790 RSI
YZ	250	F Efi	21 - 21	965 RSI	790 RSI
YZ	250	FX Efi	15 - 15	840 SI	790 SI
YZ	250	WRA,WRB	90 - 91	611 RSI	632 RSI
YZ	250	X	16 - 17	840 SI	790 SI
	300	Tricity Left	20 - 20	222 CT	227 CT
	300	Tricity Right	20 - 20	223 CT	
YFM	300	Grizzly	12 - 13	544 SI*	586 SI
YFM	300	Warrior	89 - 89	536 SI	584 SI
YP	300	X-Max	17 - 20	229 CT	230 CT
YZF	321	R3	15 - 21	931 HS	932 HF
BW	350		87 - 88	2049	2032
RD	350		73 - 79	504 HF	2064

* = 2 sets required / 2 jeux pour l'Avant.
Full compound selection, see under "Brake pad 1:1 Drawings" / Sélection complète de composés, voir "1:1 Schémas Plaquettes de frein".

				RECOMMENDED 1xx - 2xx = Scooter Pads 5xx - 9xx = Street, Off Road & Racing Pads 2xxx = Brake Shoes	
YAMAHA					
RZ	350		84 - 85	550 HF*	555 HF
RZ	350		86 - 88	570 HS*	570 LS
TT	350		86 - 87	580 SI	2034
TT	350		95 - 00	611 SI	632 SI
TY	350		86 - 86	2049	2032
XT	350		85 - 96	575 HF	2034
YFM	350	Big Bear Special Edition	99 - 99	2178*	2066
YFM	350	Bruin 2x4, 4x4	04 - 07	536 SI*	
YFM	350	ERT, ERU	87 - 88	2028*	576 HF
YFM	350	ERW, ERA-G	89 - 95	2035*	576 HF
YFM	350	FWB L, LC Big Bear	99 - 99	536 SI*	2066
YFM	350	FWH, FWJ, FWK Big Bear	96 - 98	2178*	2066
YFM	350	FWT, FWU Big Bear	87 - 88	2114*	576 HF
YFM	350	FWW, FWA-G Big Bear	89 - 95	2178*	576 HF
YFM	350	FXG-FXM Wolverine	95 - 11	536 SI*	592 SI
YFM	350	R Raptor	04 - 14	592 SI*	592 SI
YFM	350	UH, UJ, UK	96 - 98	2178*	2066
YFM	350	XG,XH Warrior	95 - 96	536 SI*	592 SI
YFM	350	XT, XU Warrior	87 - 88	575 SI*	592 SI
YFM	350	XW, XA-M Warrior	89 - 07	536 SI*	536 SI
YFP	350	U Terrapro	88 - 88	2035*	2177
YFZ	350	Banshee	87 - 89	575 SI*	592 SI
YFZ	350	Banshee	90 - 06	536 SI*	592 SI
XS	360	B	76 - 76	504 HF	2064
XS	360	C, D	77 - 77	507 HF	507 HF
DT	400	all models	75 - 77	2035	2037
FZR	400	A	90 - 90	613 HS	570 LS
WR	400	F	98 - 98	694 SI	648 SI
WR	400	F	99 - 00	694 SI	604 SI
XJ	400	S Seca II	93 - 93	663 HS	570 LS
XS	400		77 - 77	507 HF	507 HF
XS	400		78 - 81	2113	2066
XS	400		82 - 85	550 HF	2066
XS	400	DOHC	82 - 82	550 HF	2066
XS	400	SE Left	80 - 81	545 HF	2066
XS	400	SE Right	80 - 81	528 HF	
XS	400	SG, SH, SF	80 - 81	528 HF	2066
XS	400	Z	83 - 83	555 HF	555 HF
YFM	400	FAM Kodiak	00 - 02	536 SI*	754 SI
YFM	400	FAR Kodiak Automatic	03 - 03	536 SI*	2066
YFM	400	FWN Big Bear 4WD	00 - 11	536 SI*	754 SI
YFM	400	FWNH Big Bear-Buckmaster 4WD	00 - 11	536 SI*	754 SI
YFM	400	Kodiak	93 - 99	2178*	2066
YFM	400	N Big Bear 2WD	00 - 11	536 SI*	754 SI
YP	400	Majesty	04 - 04	170 MS	185 MS
YP	400	Majesty	05 - 13	128 MS*	185 MS
YP	400	R X-Max	13 - 16	181 MS	195 MS
YP	400	RA X-Max	14 - 16	181 MS	195 MS
YZ	400		77 - 79	2033	2035
YZ	400		98 - 98	694 RSI	648 RSI
YZ	400	F	99 - 99	694 RSI	604 RSI
IT	425		80 - 80	2033	2035
WR	426	F	01 - 02	694 SI	604 SI
YZ	426	F	00 - 02	694 RSI	604 RSI
WR	450	F	03 - 15	694 SI	790 SI
WR	450	F Efi	16 - 20	840 SI	790 SI
WR	450	F Efi	21 - 21	965 SI	790 SI
WR	450	F Enduro GP	18 - 18	840 SI	790 SI
YFM	450	FA Kodiak	03 - 07	536 SI*	754 SI
YFM	450	Wolverine	06 - 10	536 SI*	754 SI
YFZ	450	S Left	04 - 05	638 SI	592 SI
YFZ	450	S Right	04 - 05	611 SI	
YFZ	450	S Left	06 - 09	638 SI	709 SI
YFZ	450	S Right	06 - 09	611 SI	
YXR	450	Rhino Left	06 - 09	611 SI	816 SI
YXR	450	Rhino Right	06 - 09	638 SI	

				RECOMMENDED 1xx - 2xx = Scooter Pads 5xx - 9xx = Street, Off Road & Racing Pads 2xxx = Brake Shoes	
YAMAHA					
YZ	450	F	03 - 07	694 RSI	790 RSI
YZ	450	F	08 - 19	840 RSI	790 RSI
YZ	450	F	20 - 21	965 RSI	790 RSI
YZ	450	FX	16 - 20	840 SI	790 SI
YZ	450	FX	21 - 21	965 SI	790 SI
IT	465		81 - 82	2036	2037
YZ	465		80 - 80	2036	2035
YZ	465		81 - 81	2036	2037
IT	490		84 - 84	2036	2037
YZ	490		81 - 82	2036	2037
YZ	490		83 - 83	2036	2034
YZ	490		84 - 84	2036	2037
YZ	490		85 - 90	580 SI	2037
IT	500	G, H.	80 - 81	2033	2035
SR	500		78 - 91	507 HF	2037
SR	500		92 - 98	2190	2037
TX	500	A, B	74 - 77	504 HF	2063
WR	500	B	91 - 91	611 SI	575 SI
WR	500	ZD,ZE	92 - 93	611 SI	632 SI
XP	500	TMAX	01 - 03	170 MS	169 MS
XP	500	TMAX	04 - 07	128 MS*	185 MS
XP	500	TMAX	08 - 11	198 MS*	185 MS
XP	500	TMAX Tech Max	11 - 11	198 MS*	185 MS
XS	500		75 - 77	504 HF*	2063
XS	500		77 - 81	507 HF	507 HF
XT	500		76 - 80	2035	2037
XT	500		86 - 89	575 HF	2037
XV	500	K, Virago	83 - 83	550 HF	2063
XV	500	SE	83 - 83	550 HF	2063
XP	530	TMAX	12 - 19	198 MS*	169 MS
XP	530	TMAX DX	17 - 19	198 MS*	169 MS
XP	530	TMAX Iron Max	15 - 19	198 MS*	169 MS
XP	530	TMAX SX	17 - 19	198 MS*	169 MS
XV	535	DX Virago	98 - 03	663 HS	2065
XV	535	S Virago	96 - 03	663 HS	2065
XV	535	Virago	87 - 94	616 HF	2065
XV	535	Virago	95 - 97	663 HS	2065
XJ	550	Maxim	81 - 83	547 HF	2063
XJ	550	Seca	81 - 83	547 HF	2066
XT	550		82 - 83	2037	2037
XZ	550		82 - 82	547 HF*	2063
XZ	550		83 - 84	550 HF*	2063
XZ	550	RJ, RK	82 - 83	550 HF	2063
XZ	550	S	83 - 84	550 HF*	2063
YFM	550	FGPW Grizzly Left	09 - 16	850 SI	852 SI
YFM	550	FGPW Grizzly Right	09 - 16	849 SI	851 SI
	560	TMAX	20 - 20	198 MS*	169 MS
	560	TMAX Tech Max	20 - 20	198 MS*	169 MS
FJ	600		84 - 85	555 HF*	555 HF
FZ	600		86 - 87	555 HF*	555 HF
FZ	600	S, SC	86 - 89	555 HF*	570 HF
FZ6	600		04 - 08	691 HS*	657 LS
FZ6	600	Fazer	04 - 08	691 HS*	657 LS
FZ6	600	Fazer S2	07 - 09	634 HS*	657 LS
FZ6	600	Fazer S2 ABS	07 - 09	634 HS*	657 LS
FZ6	600	S2	07 - 09	634 HS*	657 LS
FZ6	600	S2 ABS	07 - 09	634 HS*	657 LS
FZ6R	600		09 - 14	691 HS*	614 LS
FZR	600		89 - 89	555 HF*	555 HF
FZR	600	R	90 - 91	645 HS*	555 LS
FZR	600	R	92 - 95	665 HS*	555 LS
FZS	600	Fazer	98 - 03	634 HS*	570 LS
FZS	600	S Fazer	01 - 03	634 HS*	570 LS
SRX	600		86 - 87	570 HF*	570 HF
SRX	600		88 - 89	590 HF	570 HF
SRX	600		90 - 99	613 HS	570 LS
TT	600		85 - 88	575 HF	2034
TT	600		89 - 89	596 HF	2034

* = 2 sets required / 2 jeux pour l'Avant.
Full compound selection, see under "Brake pad 1:1 Drawings" / Sélection complète de composés, voir "1:1 Schémas Plaquettes de frein".

RECOMMENDED
1xx - 2xx = Scooter Pads
5xx - 9xx = Street, Off Road & Racing Pads
2xxx = Brake Shoes

YAMAHA					
TT	600		90 - 92	580 HF	2034
TT	600	K,L	83 - 84	2036	2034
XJ	600	SECA II	92 - 96	663 HS	570 LS
XT	600		83 - 86	550 HF	2037
YFM	600	4x4 Grizzly	98 - 01	592 SI*	2066
YX	600	Radian	87 - 90	555 HF*	2063
YZF	600	R	94 - 96	645 HS*	555 LS
YZF	600	R Thunder Cat	96 - 03	634 HS*	555 LS
YZF	600	R6	99 - 02	634 HS*	728 LS
YZF	600	R6	03 - 16	634 HS*	657 LS
YZF	600	R6	17 - 20	634 HS*	834 LS
YZF	600	R6 Quick change /			
		Front wheel	17 - 20	966 DS-1*	834 LS
TX	650		72 - 73	504 HF	
XJ	650		80 - 82	507 HF*	2065
XJ	650		83 - 83	550 HF	2065
XJ	650	G, H, SH Left	80 - 83	545 HF	2065
XJ	650	G, H, SH Right	80 - 83	528 HF	
XJ	650	RJ Seca	81 - 83	507 HF*	2065
XJ	650	Turbo	81 - 82	550 HF*	2065
XS	650		75 - 77	504 HF*	2064
XS	650		75 - 85	507 HF*	507 HF
XS	650		77 - 79	507 HF*	2064
XS	650		80 - 82	545 HF	507 HF
XS	650	SE	80 - 82	507 HF	507 HF
XS	650	SJ, SK	82 - 82	507 HF*	2064
XS	650	SK, Heritage	83 - 83	507 HF*	507 HF
XVS	650	V-Star	09 - 14	663 HS	769 LS
XVS	650	V-Star Classic	98 - 06	663 HS	2065
XVS	650	V-Star Custom	98 - 06	663 HS	2065
XVS	650	V-Star Tourer	09 - 14	663 HS	769 LS
	660	Rhino Left	05 - 08	611 SI	816 SI
	660	Rhino Right	05 - 08	638 SI	
XT	660	R	04 - 11	674 HS	675 LS
XT	660	X	04 - 13	706 HS	675 LS
XT	660	Z Tenere	08 - 14	671 HS*	675 LS
XT	660	Z Tenere ABS	11 - 14	671 HS*	675 LS
YFM	660	FWAP 4x4 Grizzly	02 - 08	592 SI*	799 SI
YFM	660	RN Raptor	01 - 09	592 SI*	592 SI
FZ	700		87 - 88	555 HF*	555 HF
FZ-07	700		14 - 17	634 HS*	657 LS
FZX	700	Fazer	87 - 88	555 HF	555 HF
MT-07	700		14 - 18	634 HS*	657 LS
MT-07	700	Moto Cage	15 - 17	634 HS*	657 LS
MT-07	700	SP	18 - 18	634 HS*	657 LS
MT-07	700	Tracer	16 - 20	634 HS*	657 LS
MT-07	700	Tracer GT	19 - 19	634 HS*	657 LS
XJ	700		86 - 89	555 HF	2065
XJ	700	Maxim	85 - 89	555 HF	555 HF
XSR	700		16 - 20	634 HS*	657 LS
XSR	700	XTribute	19 - 20	634 HS*	657 LS
XTZ	700	Tenere	19 - 21	671 HS*	675 LS
XV	700	L, LC	84 - 87	555 HF*	2065
XV	700	Virago	87 - 87	555 HF	2065
YFM	700	FGPW Grizzly Left	07 - 17	850 SI	852 SI
YFM	700	FGPW Grizzly Right	07 - 17	849 SI	851 SI
YFM	700	R Raptor Left	06 - 08	611 SI	816 SI
YFM	700	R Raptor Right	06 - 08	638 SI	
YFM	700	Raptor Left	09 - 12	611 SI	816 SI
YFM	700	Raptor Right	09 - 12	638 SI	
YFM	700	Raptor Left	13 - 14	611 SI	709 SI
YFM	700	Raptor Right	13 - 14	638 SI	
YXC	700	Viking VI Left	15 - 16	971 PSI	973 PSI
YXC	700	Viking VI Right	15 - 16	972 PSI	974 PSI
YXC	700	Viking VI EPS Left	15 - 21	971 PSI	973 PSI
YXC	700	Viking VI EPS Right	15 - 21	972 PSI	974 PSI
YXC	700	Viking VI EPS			
		Special Edition Left	16 - 17	971 PSI	973 PSI

RECOMMENDED
1xx - 2xx = Scooter Pads
5xx - 9xx = Street, Off Road & Racing Pads
2xxx = Brake Shoes

YAMAHA					
YXC	700	Viking VI EPS			
		Special Edition Right	16 - 17	972 PSI	974 PSI
YXE	700	Wolverine Left	16 - 18	971 PSI	973 PSI
YXE	700	Wolverine Right	16 - 18	972 PSI	974 PSI
YXE	700	Wolverine EPS Left	17 - 17	971 PSI	973 PSI
YXE	700	Wolverine EPS Right	17 - 17	972 PSI	974 PSI
YXE	700	Wolverine R-Spec Left	16 - 16	971 PSI	973 PSI
YXE	700	Wolverine R-Spec			
		Right	16 - 16	972 PSI	974 PSI
YXE	700	Wolverine R-Spec			
		EPS Left	16 - 18	971 PSI	973 PSI
YXE	700	Wolverine R-Spec			
		EPS Right	16 - 18	972 PSI	974 PSI
YXE	700	Wolverine R-Spec			
		EPS SE Left	16 - 16	971 PSI	973 PSI
YXE	700	Wolverine R-Spec			
		EPS SE Right	16 - 16	972 PSI	974 PSI
YXE	700	Wolverine R-Spec			
		EPS Special Edition			
		Left	17 - 17	971 PSI	973 PSI
YXE	700	Wolverine R-Spec			
		EPS Special Edition			
		Right	17 - 17	972 PSI	974 PSI
YXM	700	Viking Left	14 - 20	971 PSI	973 PSI
YXM	700	Viking Right	14 - 20	972 PSI	974 PSI
YXM	700	Viking EPS Left	14 - 21	971 PSI	973 PSI
YXM	700	Viking EPS Right	14 - 21	972 PSI	974 PSI
YXM	700	Viking EPS SE Left	14 - 17	971 PSI	973 PSI
YXM	700	Viking EPS SE Right	14 - 17	972 PSI	974 PSI
YXM	700	Viking EPS Special E			
		Left	19 - 19	971 PSI	973 PSI
YXM	700	Viking EPS Special E			
		Right	19 - 19	972 PSI	974 PSI
YXM	700	Viking EPS Special			
		Edition Left	16 - 16	971 PSI	973 PSI
YXM	700	Viking EPS Special			
		Edition Right	16 - 16	972 PSI	974 PSI
YXR	700	Rhino Left	08 - 14	638 SI	638 SI
YXR	700	Rhino Right	08 - 14	611 SI	611 SI
	750	Maxim	81 - 81	547 HF	555 HF
FZ	750		85 - 86	555 HF*	555 HF
FZ	750	Genesis	86 - 86	555 HF*	570 HF
FZ	750	Genesis	87 - 88	555 HF*	555 HF
FZ	750	Genesis	89 - 92	590 HS*	555 LS
FZR	750	R	89 - 92	624 HS*	555 LS
FZR	750	R Genesis	87 - 88	613 HF*	555 HF
FZX	750	Fazer	86 - 90	555 HF*	555 HF
TX	750		73 - 74	504 HF*	2065
TX	750	A	73 - 76	504 HF*	555 HF
VF	750	Virago	88 - 88	555 HF	2065
XJ	750		83 - 87	555 HF*	555 HF
XJ	750	E	81 - 83	507 HF	2065
XJ	750	Maxim	82 - 82	550 HF*	2065
XJ	750	Seca	81 - 83	547 HF*	2065
XS	750		77 - 80	507 HF*	507 HF
XS	750	H, J, K	81 - 82	545 HF	507 HF
XS	750	SE Left	79 - 80	545 HF	507 HF
XS	750	SE Right	79 - 80	528 HF	
XV	750		89 - 92	555 HS	2065
XV	750	MK	83 - 83	528 HF	2063
XV	750	SE	81 - 83	545 HF	2063
XV	750	Virago	93 - 97	555 HS*	2065
XV	750	Virago	94 - 97	663 HS*	2065
YZF	750	R, SP	93 - 97	683 HS*	555 LS
YZF	750	R7 OW02	99 - 02	634 HS*	733 LS
YZF	750	R7 OW02 Race kit	99 - 01	729 HS*	
	800	Fazer 8	10 - 15	634 HS*	657 LS
FZ8	800		10 - 14	634 HS*	657 LS

* = 2 sets required / 2 jeux pour l'Avant.
Full compound selection, see under "Brake pad 1:1 Drawings" / Sélection complète de composés, voir "1:1 Schémas Plaquettes de frein".

				RECOMMENDED 1xx - 2xx = Scooter Pads 5xx - 9xx = Street, Off Road & Racing Pads 2xxx = Brake Shoes	
YAMAHA					
FJ-09	850		15 - 17	634 HS*	657 LS
FZ-09	850		14 - 17	634 HS*	657 LS
MT-09	850		18 - 18	634 HS*	657 LS
MXT	850	Niken	18 - 18	634 HS*	657 LS
MXT	850	Niken GT	19 - 20	634 HS*	657 LS
TDM	850		91 - 95	590 HS*	555 LS
TDM	850		96 - 01	645 HS*	555 LS
XS	850		80 - 80	507 HF*	507 HF
XS	850	Left	81 - 81	545 HF	507 HF
XS	850	Right	81 - 81	528 HF	
YXE	850	Wolverine X2 Left	19 - 19	971 PSI	973 PSI
YXE	850	Wolverine X2 Right	19 - 19	972 PSI	974 PSI
YXE	850	Wolverine X2 EPS Left	20 - 20	971 PSI	973 PSI
YXE	850	Wolverine X2 EPS			
		Right	20 - 20	972 PSI	974 PSI
YXE	850	Wolverine X2			
		R-Spec Left	19 - 20	971 PSI	973 PSI
YXE	850	Wolverine X2			
		R-Spec Right	19 - 20	972 PSI	974 PSI
YXE	850	Wolverine X2 XTR Left	20 - 20	971 PSI	973 PSI
YXE	850	Wolverine X2 XTR Right	20 - 20	972 PSI	974 PSI
YXF	850	Wolverine X4 Left	18 - 20	971 PSI	973 PSI
YXF	850	Wolverine X4 Right	18 - 20	972 PSI	974 PSI
YXF	850	Wolverine X4 SE Left	19 - 19	971 PSI	973 PSI
YXF	850	Wolverine X4 SE Right	19 - 19	972 PSI	974 PSI
YXF	850	Wolverine X4 Special			
		Left	19 - 19	971 PSI	973 PSI
YXF	850	Wolverine X4 Special			
		Right	19 - 19	972 PSI	974 PSI
YXF	850	Wolverine X4 Special			
		Edition Left	18 - 18	971 PSI	973 PSI
YXF	850	Wolverine X4 Special			
		Edition Right	18 - 18	972 PSI	974 PSI
YXF	850	Wolverine X4 XTR Left	20 - 20	971 PSI	973 PSI
YXF	850	Wolverine X4 XTR Right	20 - 20	972 PSI	974 PSI
MT-09	900		14 - 20	634 HS*	657 LS
MT-09	900	SP	18 - 20	634 HS*	657 LS
MT-09	900	Sport Tracker	15 - 16	634 HS*	657 LS
MT-09	900	Street Rally	14 - 16	634 HS*	657 LS
MT-09	900	Tracer	15 - 20	634 HS*	657 LS
MT-09	900	Tracer GT	18 - 20	634 HS*	657 LS
XJ	900		83 - 93	555 HF*	555 HF
XSR	900		16 - 20	634 HS*	657 LS
XSR	900	Abarth	17 - 18	634 HS*	657 LS
XV	920		81 - 82	507 HF	
XV	920	J	82 - 82	547 HF	2065
XV	920	K, MK, Virago	83 - 83	545 HF	550 HF
SCR	950	Scrambler	17 - 19	663 HS	769 LS
XV	950	Bolt	14 - 18	663 HS	769 LS
XV	950	Bolt C-Spec	15 - 18	663 HS	769 LS
XV	950	Bolt Racer	17 - 18	663 HS	769 LS
XV	950	Bolt R-Spec	14 - 21	663 HS	769 LS
XVS	950	A Midnight Star	09 - 13	663 HS	769 LS
	1000	Wolverine RMAX 4	21 - 21	979 PSI*	980 PSI*
	1000	Wolverine RMAX 4 LE	21 - 21	979 PSI*	980 PSI*
	1000	Wolverine RMAX 4 SE	21 - 21	979 PSI*	980 PSI*
FZ1	1000	Fazer	06 - 16	634 HS*	657 LS
FZ-10	1000		16 - 17	634 HS*	657 LS
FZR	1000		94 - 95	683 HS*	555 LS
FZR	1000	EX UP	90 - 91	645 HS*	555 LS
FZR	1000	EX UP	92 - 93	665 HS*	555 LS
FZR	1000	Genesis	87 - 89	613 HF*	555 HF
FZS	1000	Fazer	01 - 05	634 HS*	770 LS
GTS	1000		93 - 99	682 HF	555 HF
MT-10	1000		16 - 20	634 HS*	657 LS
MT-10	1000	SP	17 - 19	634 HS*	657 LS
XV	1000	L, C	84 - 85	555 HF*	555 HF
YXE	1000		21 - 21	979 PSI*	980 PSI*

				RECOMMENDED 1xx - 2xx = Scooter Pads 5xx - 9xx = Street, Off Road & Racing Pads 2xxx = Brake Shoes	
YAMAHA					
YXZ	1000	EPS	16 - 20	979 PSI*	980 PSI*
YXZ	1000	EPS SE	17 - 19	979 PSI*	980 PSI*
YXZ	1000	EPS Special	20 - 20	979 PSI*	980 PSI*
YXZ	1000	EPS Special Edition	16 - 17	979 PSI*	980 PSI*
YXZ	1000	EPS SS	17 - 20	979 PSI*	980 PSI*
YXZ	1000	SS Special	20 - 20	979 PSI*	980 PSI*
YXZ	1000	SS XTR	20 - 20	979 PSI*	980 PSI*
YZF	1000	R Thunder Ace	96 - 99	634 HS*	555 LS
YZF	1000	R1	98 - 01	634 HS*	733 LS
YZF	1000	R1	02 - 03	634 HS*	728 LS
YZF	1000	R1	04 - 06	634 HS*	657 LS
YZF	1000	R1	15 - 21	634 SP*	834 LS
YZF	1000	R1 (4-pad)	07 - 14	839 SP*	657 LS
YZF	1000	R1 (4-pad) ABS	12 - 14	839 SP*	657 LS
YZF	1000	R1 LE	06 - 06	634 HS*	657 LS
YZF	1000	R1M	15 - 21	634 SP*	834 LS
YZF	1000	R1S	16 - 16	634 SP*	834 LS
	1100	SE, Maxim	81 - 81	547 HF	
BT	1100	Bulldog	02 - 06	634 HS*	555 LS
FJ	1100		83 - 85	555 HF*	555 HF
XJ	1100		81 - 81	547 HF*	528 HF
XS	1100	E,F,G,H	78 - 81	507 HF*	507 HF
XS	1100	LH Midnight	81 - 81	547 HF*	528 HF
XS	1100	SF, SG, SH, LG Left	79 - 81	545 HF	507 HF
XS	1100	SF, SG, SH, LG Right	79 - 81	528 HF	
XV	1100		94 - 97	555 HS*	2065
XV	1100	Virago	86 - 93	555 HF*	2065
XV	1100	Virago	94 - 98	663 HS*	2065
XV	1100	Virago	99 - 99	691 HS*	555 LS
XVS	1100	V-Star	99 - 06	691 HS*	555 LS
XVS	1100	V-Star Classic	00 - 06	691 HS*	555 LS
FJ	1200		86 - 87	555 HF*	555 HF
FJ	1200		88 - 90	613 HF*	555 HF
FJ	1200	ABS	91 - 93	613 HS*	555 LS
V-MAX	1200		85 - 89	555 HF*	555 HF
V-MAX	1200		90 - 92	555 HS*	555 LS
V-MAX	1200		93 - 03	645 HS*	555 LS
XT	1200	Z Super Tenere	14 - 19	634 SP*	769 LS
XT	1200	ZE Super Tenere	14 - 19	634 SP*	769 LS
XT	1200	ZE Super Tenere			
		Raid Ed.	18 - 19	634 SP*	769 LS
XTZ	1200	Super Tenere	10 - 13	634 SP*	769 LS
XV	1200		84 - 87	555 HF*	555 HF
XV	1200	Venture Royale	85 - 85	555 HF*	555 HF
XV	1200	Z12T	84 - 87	555 HF*	555 HF
XVT	1200	T, Vent. Royale	84 - 85	555 HF*	555 HF
FJR	1300		01 - 03	634 HS*	769 LS
FJR	1300	A	13 - 20	740 HS*	769 LS
FJR	1300	ABS	03 - 05	634 HS*	769 LS
FJR	1300	ABS	06 - 12	740 HS*	769 LS
FJR	1300	AE	16 - 19	740 HS*	769 LS
FJR	1300	AS	13 - 19	740 HS*	769 LS
XJR	1300	Racer	15 - 19	634 HS*	770 LS
XJR	1300	SP	01 - 01	634 HS*	555 LS
XVS	1300	A Midnight Star	07 - 11	691 HS*	769 LS
XVS	1300	Custom	14 - 16	691 HS	769 LS
XVS	1300	Stryker	11 - 14	663 HS	769 LS
XVS	1300	Stryker Bullet Cowl	15 - 15	663 HS	769 LS
XVS	1300	V-Star	07 - 14	691 HS*	769 LS
XVS	1300	V-Star Deluxe	07 - 14	691 HS*	769 LS
XVS	1300	V-Star Tourer	07 - 14	691 HS*	769 LS
XVZ	1300	A Royal Star	96 - 07	613 HS*	590 LS
XVZ	1300	AT Royal Star Tour			
		Classic	97 - 07	613 HS*	590 LS
XVZ	1300	Royal Star Boulevard	99 - 01	613 HS*	590 LS
XVZ	1300	Royal Star Venture S	08 - 13	663 HS*	590 LS
XVZ	1300	TF Royal Star Venture	99 - 01	663 HS*	590 LS
XVZ	1300	Venture Royale	86 - 89	613 HF*	590 HF

* = 2 sets required / 2 jeux pour l'Avant.
Full compound selection, see under "Brake pad 1:1 Drawings" / Sélection complète de composés, voir "1:1 Schémas Plaquettes de frein".

				RECOMMENDED 1xx - 2xx = Scooter Pads 5xx - 9xx = Street, Off Road & Racing Pads 2xxx = Brake Shoes	
					
YAMAHA					
XVZ	1300	Venture Royale	90 - 95	613 HS*	590 LS
XV	1600	Midnight Star	99 - 07	663 HS*	590 LS
XV	1600	Road Star	99 - 07	663 HS*	590 LS
XV	1600	Silverado	99 - 07	663 HS*	590 LS
VMX	1700	V-Max	09 - 18	839 HS*	769 LS
XV	1700	PC Road Star Warrior	03 - 07	634 HS*	769 LS
XV	1700	Road Star S	08 - 14	634 HS*	590 LS
XV	1700	Road Star Silverado S	11 - 14	634 HS*	590 LS
XV	1700	Road Star Warrior	02 - 02	634 HS*	590 LS
XV	1900	Raider	08 - 14	634 HS*	769 LS
XV	1900	Raider Bullet Cowl	15 - 15	634 HS*	769 LS
XV	1900	Raider S	08 - 14	634 HS*	769 LS
XV	1900	Raider SCL	12 - 14	634 HS*	769 LS
XV	1900	Roadliner	06 - 14	634 HS*	769 LS
XV	1900	Roadliner S	06 - 14	634 HS*	769 LS
XV	1900	Stratoliner	06 - 09	634 HS*	769 LS
XV	1900	Stratoliner Deluxe	11 - 14	634 HS*	769 LS
XV	1900	Stratoliner S	06 - 14	634 HS*	769 LS
ZERO					
DS		ZF11.4	13 - 13	694 HS	790 LS
DS		ZF11.4	14 - 14	694 HS	675 LS
DS		ZF12.5	15 - 15	674 HS	675 LS
DS		ZF13.0	16 - 17	674 HS	675 LS
DS		ZF6.0	10 - 12	708 HF	544 HF
DS		ZF8.5	13 - 13	694 HS	790 LS
DS		ZF8.5	14 - 14	694 HS	675 LS
DS		ZF9.0	10 - 12	708 HF	544 HF
DS		ZF9.4	15 - 15	674 HS	675 LS
DS		ZF9.8	16 - 17	674 HS	675 LS
DSR		ZF13.0	16 - 17	674 HS	675 LS
DSRBF		ZF14.4	19 - 21	706 HS	675 LS
FX		ZF2.8	13 - 13	694 HS	790 LS
FX		ZF2.8	14 - 14	694 HS	675 LS
FX		ZF2.8	15 - 15	671 HS	675 LS
FX		ZF3.3	16 - 17	674 HS	675 LS
FX		ZF5.7	13 - 13	694 HS	790 LS
FX		ZF5.7	14 - 14	694 HS	675 LS
FX		ZF5.7	15 - 15	671 HS	675 LS
FX		ZF6.5	16 - 17	674 HS	675 LS
FXS		ZF3.3	16 - 17	674 HS	675 LS
FXS		ZF6.5	16 - 17	674 HS	675 LS
MX			10 - 12	708 HF	544 HF
MX		ZF2.8	13 - 13	694 RSI	790 RSI
MX		ZF5.7	13 - 13	694 RSI	790 RSI
S		ZF11.4	13 - 13	694 HS	790 LS
S		ZF11.4	14 - 14	694 HS	675 LS
S		ZF12.5	15 - 15	674 HS	675 LS
S		ZF13.0	16 - 17	674 HS	675 LS
S		ZF6.0	10 - 12	708 HF	544 HF
S		ZF8.5	13 - 13	694 HS	790 LS
S		ZF8.5	14 - 14	694 HS	675 LS
S		ZF9.4	15 - 15	674 HS	675 LS
S		ZF9.8	16 - 17	674 HS	675 LS
SR		ZF11.4	14 - 14	694 HS	675 LS
SR		ZF12.5	15 - 15	674 HS	675 LS
SR		ZF13.0	16 - 17	674 HS	675 LS
SR/F		ZF14.4	19 - 21	706 HS*	675 LS
SR/S		ZF14.4	19 - 21	706 HS*	675 LS
X			10 - 12	708 HF	544 HF
XU			11 - 12	708 HF	544 HF
XU		ZF2.8	13 - 13	694 HS	790 LS
XU		ZF5.7	13 - 13	694 HS	790 LS

RECOMMENDED
1xx - 2xx = Scooter Pads
5xx - 9xx = Street, Off Road & Racing Pads
2xxx = Brake Shoes

* = 2 sets required / 2 jeux pour l'Avant.
Full compound selection, see under "Brake pad 1:1 Drawings" / Sélection complète de composés, voir "1:1 Schémas Plaquettes de frein".

NEW! Get the brake feel you want!

sbs
GO AHEAD

Find the right brake pad compound for you and your bike with the new Compound Selector at sbsbrakes.com

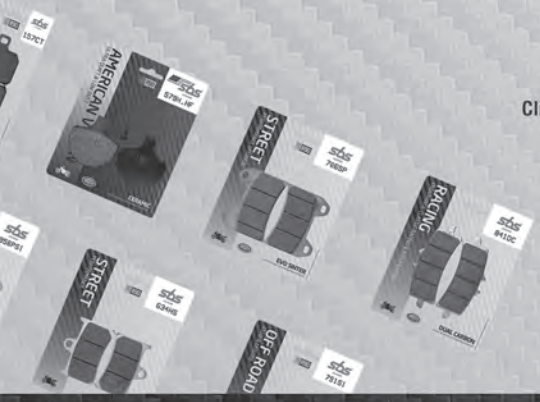

Find the right compound for you and your bike

Click Start Now, answer 2-3 questions and get the answer right away

START NOW





@sbsbrakes | sbsbrakes.com

HI-TECH BRAKE SOLUTIONS
MADE IN EUROPE

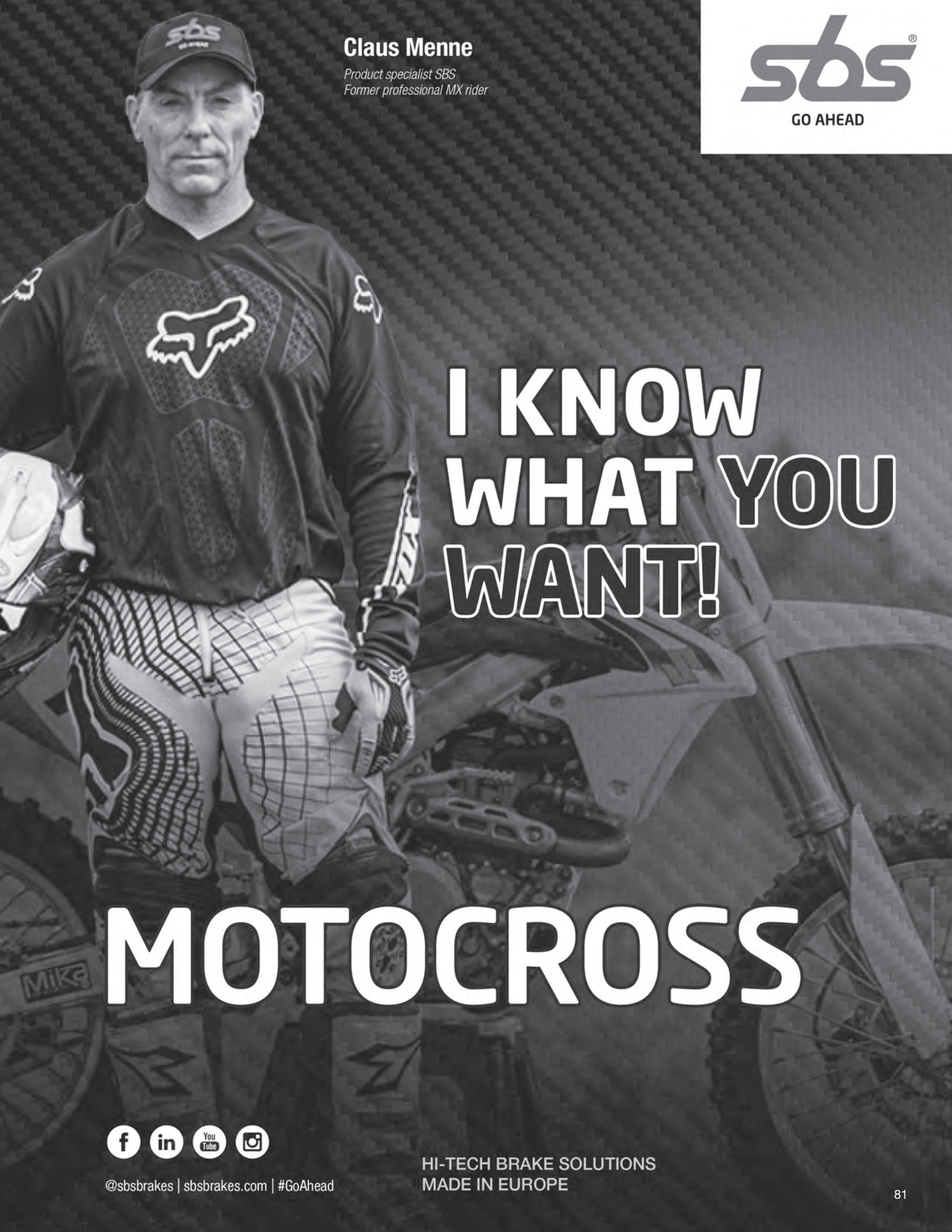
Claus Menne
Product specialist SBS
Former professional MX rider
sbs
GO AHEAD
I KNOW WHAT YOU WANT!
MOTOCROSS
@sbsbrakes | sbsbrakes.com | #GoAhead
HI-TECH BRAKE SOLUTIONS
MADE IN EUROPE



				COMPOUND CHOICE				COMPOUND CHOICE		
				RSI	SI	CS		RSI	SI	CS
APRILIA										
MXV	450	09 - 13	694	△	△	△	790	△	△	△
BENELLI										
BX	449 Cross	07 - 09	671	△	△	△	675	△	△	△
CCM										
	450 MX	08 - 10	671	△	△	△	790	△	△	△
FANTIC										
XX	125	20 - 21	840	△	△	△	790	△	△	△
GAS GAS										
MC	65	21 - 21	783	△	△	△	783	△	△	△
MC	85	21 - 21	671	△	△	△	791	△	△	△
MC	125	03 - 13	694	△	△	△	604	△	△	△
MC	125	21 - 21	671	△	△	△	791	△	△	△
MC	250	97 - 99	671	△	△	△	675	△	△	△
MC	250 F	21 - 21	671	△	△	△	791	△	△	△
MC	450 F	21 - 21	671	△	△	△	791	△	△	△
HONDA										
CR	80 R, RB	92 - 02	584	△	△		604	△	△	△
CR	85 R, R Expert	03 - 12	592	△	△	△	604	△	△	△
CR	125 R	95 - 01	694	△	△	△	604	△	△	△
CR	125 R	02 - 07	694	△	△	△	777	△	△	△
CR	125 RH, RJ, RK	87 - 94	603	△	△		604	△	△	△
CRF	150 R	07 - 21	592	△	△	△	777	△	△	△
CR	250 R	87 - 94	603	△	△		604	△	△	△
CR	250 R	95 - 01	694	△	△	△	604	△	△	△
CR	250 R	02 - 07	694	△	△	△	777	△	△	△
CRF	250 R	04 - 09	694	△	△	△	777	△	△	△
CRF	250 R Efi	10 - 21	694	△	△	△	777	△	△	△
CRF	450 Efi	09 - 12	694	△	△	△	777	△	△	△
CRF	450 R	02 - 08	694	△	△	△	777	△	△	△
CRF	450 R Efi	13 - 21	694	△	△	△	777	△	△	△
CR	500 R	87 - 94	603	△	△		604	△	△	△
CR	500 R	95 - 01	694	△	△	△	604	△	△	△
HUSABERG										
FC	400	99 - 02	671	△	△	△	675	△	△	△
FC	450	03 - 08	671	△	△	△	675	△	△	△
FC	470 , e	01 - 02	671	△	△	△	675	△	△	△
FC	501	99 - 01	671	△	△	△	675	△	△	△
FC	550	01 - 05	671	△	△	△	675	△	△	△
FC	600	99 - 01	671	△	△	△	675	△	△	△
HUSQVARNA										
CR	65	12 - 13	783	△	△	△	872	△	△	△
TC	65	17 - 21	783	△	△	△	783	△	△	△
TC	85	14 - 20	885	△	△	△	872	△	△	△
TC	85	21 - 21	671	△	△	△	791	△	△	△
CR	125	05 - 13	671	△	△	△	791	△	△	△
TC	125	14 - 21	671	△	△	△	791	△	△	△
CR	250	96 - 04	671	△	△	△	675	△	△	△
CR	250	05 - 05	671	△	△	△	791	△	△	△
FC	250	14 - 21	671	△	△	△	791	△	△	△
TC	250	02 - 03	671	△	△	△	675	△	△	△
TC	250	04 - 21	671	△	△	△	791	△	△	△
TC	300	14 - 15	671	△	△	△	791	△	△	△
FC	350	14 - 21	671	△	△	△	791	△	△	△
TC	449	11 - 13	671	△	△	△	791	△	△	△
FC	450	14 - 21	671	△	△	△	791	△	△	△
TC	450	02 - 03	671	△	△	△	675	△	△	△
TC	450	04 - 10	671	△	△	△	791	△	△	△
TC	510	02 - 03	671	△	△	△	675	△	△	△
TC	510	04 - 10	671	△	△	△	791	△	△	△
TC	570	01 - 13	671	△	△	△	675	△	△	△
TC	610	96 - 13	671	△	△	△	675	△	△	△

△ = Available quality / Qualité disponible.
To select compound for off-road front/rear - see page 21-23 / Pour sélectionner vos plaquettes off-road avant/arriére - voir page 21-23.

				COMPOUND CHOICE			COMPOUND CHOICE			
KAWASAKI					**RSI**	**SI**	**CS**		**RSI**	**SI**	**CS**
KX	65		00 - 21	752	△	△	△	536	△	△	
KX	80		88 - 96	544	△	△	△	592	△	△	△
KX	80		97 - 00	726	△	△	△	592	△	△	△
KX	85		01 - 21	726	△	△	△	592	△	△	△
KX	85	II	01 - 21	726	△	△	△	592	△	△	△
KX	100		88 - 96	544	△	△	△	592	△	△	△
KX	100		97 - 21	726	△	△	△	592	△	△	△
KX	125		86 - 86	546	△	△		586	△	△	
KX	125		89 - 93	611	△	△		632	△	△	
KX	125		94 - 94	694	△	△	△	632	△	△	
KX	125		95 - 08	694	△	△	△	604	△	△	△
KX	250		86 - 86	546	△	△		586	△	△	
KX	250		89 - 93	611	△	△		632	△	△	
KX	250		94 - 94	694	△	△	△	632	△	△	
KX	250		95 - 08	694	△	△	△	604	△	△	△
KX-F	250		04 - 10	694	△	△	△	790	△	△	△
KX-F	250	DFI	11 - 21	694	△	△	△	790	△	△	△
KX-F	450		06 - 08	694	△	△	△	790	△	△	△
KX-F	450	DFI	09 - 21	694	△	△	△	790	△	△	△
KX	500		86 - 86	546	△	△		586	△	△	
KX	500		89 - 93	611	△	△		632	△	△	
KX	500		94 - 95	694	△	△	△	632	△	△	
KX	500		96 - 04	694	△	△	△	604	△	△	△
KTM											
SX	60		99 - 99	559	△	△	△				
SX	65		00 - 01	559	△	△	△	574	△	△	△
SX	65		02 - 03	783	△	△	△	574	△	△	△
SX	65		04 - 08	783	△	△	△	794	△	△	
SX	65		09 - 21	783	△	△	△	783	△	△	△
SX	85		04 - 10	783	△	△	△	783	△	△	△
SX	85		11 - 11	783	△	△	△	872	△	△	△
SX	85		12 - 20	885	△	△	△	872	△	△	△
SX	85		21 - 21	671	△	△	△	791	△	△	△
SX	85	(19"/16" wheels)	13 - 20	885	△	△	△	872	△	△	△
SX	85	(19"/16" wheels)	21 - 21	671	△	△	△	791	△	△	△
SX	125		96 - 03	671	△	△	△	675	△	△	△
SX	125		04 - 21	671	△	△	△	791	△	△	△
SX	144		07 - 08	671	△	△	△	791	△	△	△
SX	150		09 - 21	671	△	△	△	791	△	△	△
SX	200		03 - 04	671	△	△	△	791	△	△	△
SX	250		96 - 02	671	△	△	△	675	△	△	△
SX	250		03 - 21	671	△	△	△	791	△	△	△
SX-F	250		06 - 21	671	△	△	△	791	△	△	△
SX-F	350		11 - 21	671	△	△	△	791	△	△	△
SX	360		96 - 97	671	△	△	△	675	△	△	△
SX	380		98 - 02	671	△	△	△	675	△	△	△
SX	400	Racing	00 - 02	671	△	△	△	675	△	△	△
SX-F	450		03 - 21	671	△	△	△	791	△	△	△
XC-F	450		06 - 17	671	△	△	△	791	△	△	△
SX	505	Racing	07 - 09	671	△	△	△	791	△	△	△
XC-F	505		08 - 09	671	△	△	△	791	△	△	△
SX-F	520	Racing	00 - 02	671	△	△	△	675	△	△	△
SX-F	525	Racing	03 - 03	671	△	△	△	675	△	△	△
SX-F	525	Racing	04 - 06	671	△	△	△	791	△	△	△
SX	620		95 - 99	671	△	△	△	675	△	△	△
LEM											
RX	65		05 - 10	794	△	△		794	△	△	
POLINI											
X5	65	RP	05 - 06	794	△	△		794	△	△	
SHERCO											
SX	250	2.5i-F	09 - 11	671	△	△	△	790	△	△	△
SUZUKI											
RM	65		03 - 06	752	△	△	△	536	△	△	

△ = Available quality / Qualité disponible.
To select compound for off-road front/rear - see page 21-23 / Pour sélectionner vos plaquettes off-road avant/arriére - voir page 21-23.



				COMPOUND CHOICE				COMPOUND CHOICE		
				RSI	SI	CS		RSI	SI	CS
SUZUKI										
RM	80	96 - 01	702	△	△	△	544	△	△	△
RM	85	02 - 04	702	△	△	△	544	△	△	△
RM	85	05 - 21	726	△	△	△	820	△	△	△
RM	100	03 - 03	726	△	△	△	592	△	△	△
RM	125	88 - 88	611	△	△		584	△	△	
RM	125	89 - 90	611	△	△		632	△	△	
RM	125	91 - 95	611	△	△		648	△	△	
RM	125	96 - 09	694	△	△	△	604	△	△	△
RM	250	87 - 88	611	△	△		584	△	△	
RM	250	89 - 90	611	△	△		632	△	△	
RM	250	91 - 95	611	△	△		648	△	△	
RM	250	96 - 09	694	△	△	△	604	△	△	△
RMX	250	89 - 95	611	△	△		648	△	△	
RMX	250	96 - 98	694	△	△	△	648	△	△	
RM-Z	250	04 - 21	694	△	△	△	790	△	△	△
RM-Z	450	05 - 21	694	△	△	△	790	△	△	△
RM	500	87 - 89	611	△	△		592	△	△	△
TM										
	80 Cross	96 - 00	671	△	△	△	675	△	△	△
	80 Junior	96 - 00	544	△	△	△	592	△	△	△
MX	85	01 - 12	671	△	△	△	604	△	△	△
MX	85	13 - 20	777	△	△	△	777	△	△	△
	125	96 - 00	671	△	△	△	675	△	△	△
	125	01 - 04	671	△	△	△	604	△	△	△
MX	125	05 - 20	671	△	△	△	790	△	△	△
	250	01 - 04	671	△	△	△	604	△	△	△
MX	250	05 - 20	671	△	△	△	790	△	△	△
	250 E	95 - 00	671	△	△	△	675	△	△	△
	250 F	01 - 04	671	△	△	△	604	△	△	△
MX	250 F	05 - 20	671	△	△	△	790	△	△	△
	300	98 - 00	671	△	△	△	675	△	△	△
	300	01 - 04	671	△	△	△	604	△	△	△
MX	300	05 - 20	671	△	△	△	790	△	△	△
	320	96 - 97	671	△	△	△	675	△	△	△
	400 F	00 - 00	671	△	△	△	675	△	△	△
	400 F	01 - 01	671	△	△	△	604	△	△	△
	450 F	02 - 04	671	△	△	△	604	△	△	△
MX	450 F	05 - 20	671	△	△	△	790	△	△	△
	530 F	01 - 04	671	△	△	△	604	△	△	△
MX	530 F	05 - 20	671	△	△	△	790	△	△	△
YAMAHA										
YZ	65	19 - 21	589	△	△	△	592	△	△	△
YZ	80	93 - 01	589	△	△	△	592	△	△	△
YZ	85 , LW	02 - 21	589	△	△	△	592	△	△	△
YZ	125	88 - 88	580	△	△		575	△	△	
YZ	125	89 - 89	611	△	△		584	△	△	
YZ	125	90 - 95	611	△	△		632	△	△	
YZ	125	96 - 97	611	△	△		648	△	△	
YZ	125	98 - 02	694	△	△	△	604	△	△	△
YZ	125	03 - 07	694	△	△	△	790	△	△	△
YZ	125	08 - 21	840	△	△	△	790	△	△	△
YZ	250	88 - 88	580	△	△		575	△	△	
YZ	250	89 - 89	611	△	△		584	△	△	
YZ	250	98 - 02	694	△	△	△	604	△	△	△
YZ	250	03 - 07	694	△	△	△	790	△	△	△
YZ	250	08 - 21	840	△	△	△	790	△	△	△
YZ	250 A	90 - 90	611	△	△		632	△	△	
YZ	250 B1-J1	91 - 97	611	△	△		648	△	△	
YZ	250 F	01 - 02	694	△	△	△	604	△	△	△
YZ	250 F	03 - 06	694	△	△	△	790	△	△	△
YZ	250 F	07 - 13	840	△	△	△	790	△	△	△
YZ	250 F Efi	14 - 20	840	△	△	△	790	△	△	△
YZ	250 F Efi	21 - 21	965	△	△		790	△	△	△
YZ	250 WRA,WRB	90 - 91	611	△	△		632	△	△	
YZ	400	98 - 98	694	△	△	△	648	△	△	
YZ	400 F	99 - 99	694	△	△	△	604	△	△	△

△ = Available quality / Qualité disponible.
To select compound for off-road front/rear - see page 21-23 / Pour sélectionner vos plaquettes off-road avant/arriére - voir page 21-23.



			COMPOUND CHOICE				COMPOUND CHOICE			
				RSI	SI	CS		RSI	SI	CS
YAMAHA										
YZ	426 F	00 - 02	694	△	△	△	604	△	△	△
YZ	450 F	03 - 07	694	△	△	△	790	△	△	△
YZ	450 F	08 - 19	840	△	△	△	790	△	△	△
YZ	450 F	20 - 21	965	△	△		790	△	△	△

△ = Available quality / Qualité disponible.
To select compound for off-road front/rear - see page 21-23 / Pour sélectionner vos plaquettes off-road avant/arriére - voir page 21-23.

ALMOST ANY BIKE

BRAKE PADS, CLUTCH KITS AND BRAKE ROTORS

Find the right part with the PRODUCT SELECTOR at SBSBRAKES.COM

sbs

GO AHEAD

HI-TECH BRAKE SOLUTIONS
MADE IN EUROPE



Choose your model

Select the fields in any order

Type | Brand* | CCM* | Model* | Year*

SHOW MATCHES >

NEW SEARCH



FOR TIPS & NEWS - #sbsbrakes | sbsbrakes.com

sbs®
GO AHEAD

WE KNOW WHAT YOU WANT!



ATV / UTV

@sbsbrakes | sbsbrakes.com | #GoAhead

HI-TECH BRAKE SOLUTIONS
MADE IN EUROPE





COMPOUND CHOICE

5xx - 9xx = ATV/UTV Brake Pads
2xxx = Brake Shoes



COMPOUND CHOICE

5xx - 9xx = ATV/UTV Brake Pads
2xxx = Brake Shoes

					HF	ATS	SI	RSI	PSI		HF	ATS	SI	RSI	PSI
ADLY															
	150	ATV	05 - 07	544*	△		△	△		544	△		△	△	
	150	Interceptor	05 - 07	544*	△		△	△		544	△		△	△	
	300	ATV	05 - 11	544*	△		△	△		544	△		△	△	
	300	Cross X Over	07 - 11	810*	△		△	△							
	300	Cross X Road	07 - 11	810*	△		△	△							
ATV	300	Sport	07 - 13	810*	△		△	△		848	△		△		
	320	S	07 - 13	810*	△		△	△							
	320	U	07 - 13	810*	△		△	△							
ARCTIC CAT															
	50	2WD	04 - 06	2048*											
	50	DVX	06 - 08	2048*						638	△		△	△	
	90	2WD	02 - 04	2048*											
	90	DVX	06 - 14	2048*						638	△		△	△	
	250	2x4	05 - 06	822*		△	△	△		822		△	△	△	
	250	2x4 (Man. Hand Brake)	99 - 04							827		△			
	250	2x4/4x4	99 - 04	758*		△	△	△		758		△	△	△	
	250	4x4 (Man. Hand Brake)	00 - 04							827		△			
	250	DVX	06 - 09	810*	△		△	△		775	△		△	△	
	300	2x4	10 - 13	822*		△	△	△		822		△	△	△	
	300	2x4 (Man. Hand Brake)	98 - 04							827		△			
	300	2x4/4x4	98 - 04	758*		△	△	△		758		△	△	△	
	300	4x4	05 - 05	822*		△	△	△		822		△	△	△	
	300	4x4 (Man. Hand Brake)	98 - 05							827		△			
	300	DVX	09 - 16	810*	△		△	△		775	△		△	△	
	375	2x4/4x4	02 - 02	758*		△	△	△		758		△	△	△	
	375	2x4/4x4 (Man. Hand Brake)	02 - 02							827		△			
	400	2x4 (Man. Hand Brake)	98 - 02							827		△			
	400	2x4/4x4	98 - 04	758*		△	△	△		758		△	△	△	
	400	2x4/4x4 (FIS)	02 - 04	758*		△	△	△		758		△	△	△	
	400	2x4/4x4 (FIS)	05 - 07	822*		△	△	△		822		△	△	△	
	400	2x4/4x4 (FIS) Aut. (Man. Hand Brake)	03 - 04							827		△			
	400	2x4/4x4 (FIS)(Man. Hand Brake)	02 - 04							827		△			
	400	2x4/4x4 (FIS)(Man. Hand Brake)	05 - 08							758		△	△	△	
	400	4x4 (Man. Hand Brake)	98 - 04							827		△			
	400	DVX	04 - 08	592*	△		△	△		649	△		△	△	
	400	TBX 4x4	04 - 04	758*		△	△	△		758		△	△	△	
	400	TBX 4x4 (Man. Hand Brake)	04 - 04							827		△			
TRV	400		09 - 13	822*		△	△	△		822		△	△	△	
	440	Bear Cat	96 - 97							758		△	△	△	
	450	H1	10 - 10	822*		△	△	△		822		△	△	△	
XC	450		11 - 14	822*		△	△	△		822		△	△	△	
	454	Arctic Cat 4x4	98 - 98	758*		△	△	△		758		△	△	△	
	454	Bear Cat 2x4/4x4	96 - 98	758*		△	△	△		758		△	△	△	
	454	Bear Cat 2x4/4x4 (Man. Hand Brake)	98 - 98							827		△			
	500	2x4 (FIS)(Man. Hand Brake)	02 - 02							827		△			
	500	2x4 (Man. Hand Brake)	02 - 02							827		△			
	500	2x4/4x4	98 - 04	758*		△	△	△		758		△	△	△	
	500	2x4/4x4 (FIS)	02 - 04	758*		△	△	△		758		△	△	△	
	500	2x4/4x4 (FIS)	05 - 09	822*		△	△	△		822		△	△	△	
	500	4x4 (FIS) Aut.(Man. Hand Brake)	02 - 03							827		△			
	500	4x4 (FIS)(Man. Hand Brake)	02 - 03							827		△			
	500	4x4 (Man. Hand Brake)	98 - 02							827		△			
	500	TBX 4x4	02 - 04	758*		△	△	△		758		△	△	△	
	500	TBX 4x4	05 - 06	822*		△	△	△		822		△	△	△	
	500	TBX 4x4 (Man. Hand Brake)	03 - 04							827		△			
	500	TBX 4x4 Aut.(Man. Hand Brake)	02 - 02							827		△			
	500	TRV 4x4	03 - 04	758*		△	△	△		758		△	△	△	
	500	TRV 4x4	05 - 06	822*		△	△	△		822		△	△	△	
	500	TRV 4x4 (Man. Hand Brake)	03 - 04							827		△			
	550	H1	09 - 13	822*		△	△	△		822		△	△	△	
	550	LTD	09 - 12	822*		△	△	△		822		△	△	△	
	550	Prowler	09 - 14	822*		△	△	△		822		△	△	△	
TRV	550		09 - 14	822*		△	△	△		822		△	△	△	
	650	H1 4x4 Aut.	05 - 11	822*		△	△	△		822		△	△	△	
	650	Prowler	06 - 08	822*		△	△	△		822		△	△	△	

* = 2 sets required / 2 jeux pour l'Avant.
△ = Available quality / Qualité disponible.
To select compound for off-road front/rear - see page 21-23 / Pour sélectionner vos plaquettes off-road avant/arriére - voir page 21-23.





COMPOUND CHOICE

5xx - 9xx = ATV/UTV Brake Pads
2xxx = Brake Shoes



COMPOUND CHOICE

5xx - 9xx = ATV/UTV Brake Pads
2xxx = Brake Shoes

					HF	ATS	SI	RSI	PSI		HF	ATS	SI	RSI	PSI
ARCTIC CAT															
	650	V2 4x4 Aut.	05 - 06	822*		△	△	△		822		△	△	△	
	650	V2 4x4 Aut. LE	05 - 06	822*		△	△	△		822		△	△	△	
	700	Diesel	06 - 14	822*		△	△	△		822		△	△	△	
	700	H1	09 - 10	822*		△	△	△		822		△	△	△	
	700	Prowler	08 - 08	822*		△	△	△		822		△	△	△	
	700	Wildcat Sport	15 - 18	946*		△	△	△		822		△	△	△	
	700	Wildcat Sport LTD.	16 - 18	946*		△	△	△		822		△	△	△	
	700	Wildcat Sport LTD. EPS	17 - 18	946*		△	△	△		822		△	△	△	
	700	Wildcat Sport XT	15 - 18	946*		△	△	△		822		△	△	△	
	700	Wildcat Sport XT EPS	16 - 18	946*		△	△	△		822		△	△	△	
TBX	700		12 - 14	822*		△	△	△		822		△	△	△	
TRV	700		09 - 12	822*		△	△	△		822		△	△	△	
	1000	Prowler	09 - 09	822*		△	△	△		822		△	△	△	
	1000	Thundercat	09 - 14	822*		△	△	△		822		△	△	△	
	1000	Wildcat 4X	16 - 18	912*		△	△	△		822		△	△	△	
	1000	Wildcat X	16 - 18	912*		△	△	△		822		△	△	△	
	1000	Wildcat X Ltd.	17 - 18	912*		△	△	△		822		△	△	△	
	1000	Wildcat X SE	17 - 18	912*		△	△	△		822		△	△	△	
TRV	1000		09 - 14	822*		△	△	△		822		△	△	△	
BOMBARDIER															
	50	Quest	03 - 04	2048*						2041					
DS	50		02 - 06	2048*						2041					
	90	Quest	03 - 04	2048*						2041					
DS	90		02 - 06	2048*						2041					
	200	Rally 2x4	03 - 04	544*	△		△	△							
DS	250	Left	06 - 06	754	△		△	△	△	754	△		△	△	△
DS	250	Right	06 - 06	767			△	△							
	330	Outlander Left	03 - 06	754	△		△	△	△	754	△		△	△	△
	330	Outlander Right	03 - 06	767			△	△							
	400	Outlander Left	03 - 06	754	△		△	△	△	754	△		△	△	△
	400	Outlander Right	03 - 06	767			△	△							
	400	Outlander Max Left	03 - 06	754	△		△	△	△	754	△		△	△	△
	400	Outlander Max Right	03 - 06	767			△	△							
	500	Quest Left	02 - 06	754	△		△	△	△	754	△		△	△	△
	500	Quest Right	02 - 06	767			△	△							
	500	Traxter 4x4	99 - 00	730*	△					730	△				
	500	Traxter 4x4 Left	01 - 06	754	△		△	△	△	767			△	△	
	500	Traxter 4x4 Right	01 - 06	767			△	△							
	500	Traxter Max Left	03 - 05	754	△		△	△	△	767			△	△	
	500	Traxter Max Right	03 - 05	767			△	△							
	650	Quest Left	02 - 06	754	△		△	△	△	754	△		△	△	△
	650	Quest Left	02 - 06	754	△		△	△	△	754	△		△	△	△
	650	Quest Right	02 - 06	767			△	△							
	650	Quest Right	02 - 06	767			△	△							
	650	Quest Max Left	03 - 06	754	△		△	△	△	767			△	△	
	650	Quest Max Right	03 - 06	767			△	△							
	650	Traxter Max Left	03 - 05	754	△		△	△	△	767			△	△	
	650	Traxter Max Right	03 - 05	767			△	△							
DS	650	Left	01 - 06	754	△		△	△	△	754	△		△	△	△
DS	650	Right	01 - 06	767			△	△							
	800	Outlander Left	06 - 06	754	△		△	△	△	754	△		△	△	△
	800	Outlander Right	06 - 06	767			△	△							
	800	Outlander XT Left	06 - 06	754	△		△	△	△	754	△		△	△	△
	800	Outlander XT Right	06 - 06	767			△	△							
CAN-AM															
DS	50		07 - 11	2048*						2041					
DS	70		08 - 14	2048*						2041					
DS	90		07 - 18	2048*						2041					
DS	90	X	08 - 18	544*	△		△	△		544	△		△	△	
DS	250		08 - 18	810*	△		△	△		810	△		△	△	
	400	Outlander EFi Left	09 - 14	754	△		△	△	△	754	△		△	△	△
	400	Outlander EFi Right	09 - 14	767			△	△							
	400	Outlander MAX STD Left	07 - 13	754	△		△	△	△	754	△		△	△	△
	400	Outlander MAX STD Right	07 - 13	767			△	△							
	400	Outlander MAX XT Left	07 - 13	754	△		△	△	△	754	△		△	△	△
	400	Outlander MAX XT Right	07 - 13	767			△	△							

* = 2 sets required / 2 jeux pour l'Avant.
△ = Available quality / Qualité disponible.
To select compound for off-road front/rear - see page 21-23 / Pour sélectionner vos plaquettes off-road avant/arriére - voir page 21-23.





COMPOUND CHOICE

5xx - 9xx = ATV/UTV Brake Pads
2xxx = Brake Shoes



COMPOUND CHOICE

5xx - 9xx = ATV/UTV Brake Pads
2xxx = Brake Shoes

CAN-AM					HF	ATS	SI	RSI	PSI		HF	ATS	SI	RSI	PSI
	400 Outlander STD Left	07 - 14	754	△		△	△	△	754	△		△	△	△
	400 Outlander STD Right	07 - 14	767			△	△							
	400 Outlander XT Left	07 - 14	754	△		△	△	△	754	△		△	△	△
	400 Outlander XT Right	07 - 14	767			△	△							
	450 Outlander Left	15 - 18	911			△	△							
	450 Outlander Right	15 - 18	910			△	△		910			△	△	
	450 Outlander MAX Left	15 - 18	911			△	△							
	450 Outlander MAX Right	15 - 18	910			△	△		910			△	△	
DS	450	08 - 12	907*			△	△		908			△	△	
	500 Outlander Left	13 - 14	911			△	△							
	500 Outlander Right	13 - 14	910			△	△		910			△	△	
	500 Outlander MAX Left	13 - 14	911			△	△							
	500 Outlander MAX Right	13 - 14	910			△	△		910			△	△	
	500 Outlander MAX STD Left	07 - 12	754	△		△	△	△	754	△		△	△	△
	500 Outlander MAX STD Right	07 - 12	767			△	△							
	500 Outlander MAX XT Left	07 - 12	754	△		△	△	△	754	△		△	△	△
	500 Outlander MAX XT Right	07 - 12	767			△	△							
	500 Outlander STD Left	07 - 12	754	△		△	△	△	754	△		△	△	△
	500 Outlander STD Right	07 - 12	767			△	△							
	500 Outlander XT Left	07 - 12	754	△		△	△	△	754	△		△	△	△
	500 Outlander XT Right	07 - 12	767			△	△							
	500 Renegade Left	08 - 11	754	△		△	△	△	754	△		△	△	△
	500 Renegade Right	08 - 11	767			△	△							
	500 Renegade Left	12 - 13	911			△	△							
	500 Renegade Right	12 - 13	910			△	△		910			△	△	
	500 Renegade Left	14 - 14	911			△	△		911			△	△	
	500 Renegade Right	14 - 14	910			△	△		910			△	△	
	650 Outlander Left	13 - 15	911			△	△							
	650 Outlander Right	13 - 15	910			△	△		910			△	△	
	650 Outlander 6x6 Left	14 - 18	911			△	△		911			△	△	
	650 Outlander 6x6 Right	14 - 18	910			△	△		910			△	△	
	650 Outlander MAX Left	13 - 15	911			△	△							
	650 Outlander MAX Right	13 - 15	910			△	△		910			△	△	
	650 Outlander MAX STD Left	07 - 12	754	△		△	△	△	754	△		△	△	△
	650 Outlander MAX STD Right	07 - 12	767			△	△							
	650 Outlander MAX XT Left	07 - 12	754	△		△	△	△	754	△		△	△	△
	650 Outlander MAX XT Right	07 - 12	767			△	△							
	650 Outlander STD Left	07 - 12	754	△		△	△	△	754	△		△	△	△
	650 Outlander STD Right	07 - 12	767			△	△							
	650 Outlander XT Left	07 - 12	754	△		△	△	△	754	△		△	△	△
	650 Outlander XT Right	07 - 12	767			△	△							
	800 Commander Left	11 - 14	638	△		△	△		611	△		△	△	
	800 Commander Right	11 - 14	611	△		△	△							
	800 Commander MAX R EFI Left	18 - 20	971			△	△	△	754	△		△	△	△
	800 Commander MAX R EFI Right	18 - 20	972			△	△	△						
	800 Commander R EFI Left	18 - 18	971			△	△	△	754	△		△	△	△
	800 Commander R EFI Right	18 - 18	972			△	△	△						
	800 Outlander Left	12 - 15	911			△	△							
	800 Outlander Right	12 - 15	910			△	△		910			△	△	
	800 Outlander MAX Left	13 - 14	911			△	△							
	800 Outlander MAX Right	13 - 14	910			△	△		910			△	△	
	800 Outlander MAX LTD Left	07 - 11	754	△		△	△	△	754	△		△	△	△
	800 Outlander MAX LTD Right	07 - 11	767			△	△							
	800 Outlander MAX STD Left	07 - 11	754	△		△	△	△	754	△		△	△	△
	800 Outlander MAX STD Right	07 - 11	767			△	△							
	800 Outlander MAX XT Left	07 - 11	754	△		△	△	△	754	△		△	△	△
	800 Outlander MAX XT Right	07 - 11	767			△	△							
	800 Outlander STD Left	07 - 11	754	△		△	△	△	754	△		△	△	△
	800 Outlander STD Right	07 - 11	767			△	△							
	800 Outlander XT Left	07 - 11	754	△		△	△	△	754	△		△	△	△
	800 Outlander XT Right	07 - 11	767			△	△							
	800 Renegade Left	08 - 11	754	△		△	△	△	754	△		△	△	△
	800 Renegade Right	08 - 11	767			△	△							
	800 Renegade Left	12 - 13	911			△	△							
	800 Renegade Right	12 - 13	910			△	△		910			△	△	
	800 Renegade Left	14 - 15	911			△	△		911			△	△	
	800 Renegade Right	14 - 15	910			△	△		910			△	△	
	800 Renegade EFi Left	07 - 11	754	△		△	△	△	754	△		△	△	△

* = 2 sets required / 2 jeux pour l'Avant.
△ = Available quality / Qualité disponible.
To select compound for off-road front/rear - see page 21-23 / Pour sélectionner vos plaquettes off-road avant/arriére - voir page 21-23.





COMPOUND CHOICE

5xx - 9xx = ATV/UTV Brake Pads
2xxx = Brake Shoes



COMPOUND CHOICE

5xx - 9xx = ATV/UTV Brake Pads
2xxx = Brake Shoes

					HF	ATS	SI	RSI	PSI		HF	ATS	SI	RSI	PSI
CAN-AM															
	800	Renegade EFi Right	07 - 11	767			△	△							
	800	Renegade X Left	08 - 11	754	△		△	△	△	754	△		△	△	△
	800	Renegade X Right	08 - 11	767			△	△							
	900	X3 Left	17 - 19	957			△	△	△	957			△	△	△
	900	X3 Right	17 - 19	956			△	△	△	956			△	△	△
	900	X3 MAX Left	17 - 19	957			△	△	△	957			△	△	△
	900	X3 MAX Right	17 - 19	956			△	△	△	956			△	△	△
	900	X3 MAX Turbo Left	18 - 19	957			△	△	△	957			△	△	△
	900	X3 MAX Turbo Right	18 - 19	956			△	△	△	956			△	△	△
	900	X3 MAX Turbo R Left	18 - 19	957			△	△	△	957			△	△	△
	900	X3 MAX Turbo R Right	18 - 19	956			△	△	△	956			△	△	△
	900	X3 Turbo Left	18 - 19	957			△	△	△	957			△	△	△
	900	X3 Turbo Right	18 - 19	956			△	△	△	956			△	△	△
	900	X3 Turbo R Left	18 - 19	957			△	△	△	957			△	△	△
	900	X3 Turbo R Right	18 - 19	956			△	△	△	956			△	△	△
	1000	Commander Left	16 - 17	971			△	△	△	754	△		△	△	△
	1000	Commander Right	16 - 17	972			△	△	△						
	1000	Commander MAX Left	14 - 17	971			△	△	△	754	△		△	△	△
	1000	Commander MAX Right	14 - 17	972			△	△	△						
	1000	Commander MAX R EFI Left	18 - 19	971			△	△	△	754	△		△	△	△
	1000	Commander MAX R EFI Right	18 - 19	972			△	△	△						
	1000	Commander R EFI Left	18 - 20	971			△	△	△	754	△		△	△	△
	1000	Commander R EFI Right	18 - 20	972			△	△	△						
	1000	Maverick Left	14 - 18	971			△	△	△	754	△		△	△	△
	1000	Maverick Right	14 - 18	972			△	△	△						
	1000	Maverick MAX Left	14 - 18	971			△	△	△	754	△		△	△	△
	1000	Maverick MAX Right	14 - 18	972			△	△	△						
	1000	Outlander Left	12 - 15	910			△	△		910			△	△	
	1000	Outlander Right	12 - 15	911			△	△							
	1000	Outlander 6x6 Left	14 - 18	911			△	△		911			△	△	
	1000	Outlander 6x6 Right	14 - 18	910			△	△		910			△	△	
	1000	Outlander MAX Left	12 - 18	911			△	△							
	1000	Outlander MAX Right	12 - 18	910			△	△		910			△	△	
	1000	Renegade Left	12 - 13	911			△	△							
	1000	Renegade Right	12 - 13	910			△	△		910			△	△	
	1000	Renegade Left	14 - 18	911			△	△		911			△	△	
	1000	Renegade Right	14 - 18	910			△	△		910			△	△	
CANNONDALE															
	440	Blaze Left	03 - 03	754	△		△	△	△	754	△		△	△	△
	440	Blaze Right	03 - 03	767			△	△							
	440	Cannibal Left	03 - 03	754	△		△	△	△	754	△		△	△	△
	440	Cannibal Right	03 - 03	767			△	△							
	440	Glamis Left	03 - 03	754	△		△	△	△	754	△		△	△	△
	440	Glamis Right	03 - 03	767			△	△							
	440	Moto Left	03 - 03	754	△		△	△	△	754	△		△	△	△
	440	Moto Right	03 - 03	767			△	△							
	440	Speed Left	03 - 03	754	△		△	△	△	754	△		△	△	△
	440	Speed Right	03 - 03	767			△	△							
CECTEK															
	500	EFI Gladiator	09 - 13	810*	△		△	△		544	△		△	△	
	500	EFI King Cobra	09 - 13	878*	△		△	△		544	△		△	△	
	500	EFI Quadrift	09 - 11	878*	△		△	△		544	△		△	△	
	500	i Estoc	10 - 10	878*	△		△	△		544	△		△	△	
CF MOTO															
	450	C-Force L	16 - 17	914*			△	△		799			△	△	
	450	G-Force L	16 - 17	914*			△	△		799			△	△	
CF	500	Terralander	13 - 15	914*			△	△		799			△	△	
	550	C-Force	16 - 17	914*			△	△		799			△	△	
	550	U-Force Left	15 - 16	638	△		△	△							
	550	U-Force Right	15 - 16	611	△		△	△							
	550	Z-Force Left	15 - 16	638	△		△	△							
	550	Z-Force Right	15 - 16	611	△		△	△							
CF	625	Terralander	11 - 15	914*			△	△		799			△	△	
	800	Z-Force EX Left	15 - 15	638	△		△	△							
	800	Z-Force EX Right	15 - 15	611	△		△	△							

* = 2 sets required / 2 jeux pour l'Avant.
△ = Available quality / Qualité disponible.
To select compound for off-road front/rear - see page 21-23 / Pour sélectionner vos plaquettes off-road avant/arriére - voir page 21-23.





COMPOUND CHOICE

5xx - 9xx = ATV/UTV Brake Pads
2xxx = Brake Shoes



COMPOUND CHOICE

5xx - 9xx = ATV/UTV Brake Pads
2xxx = Brake Shoes

					HF	ATS	SI	RSI	PSI		HF	ATS	SI	RSI	PSI
CF MOTO															
CF	800	Terralander	12 - 14	914*			△	△		799			△	△	
CPI															
	250	XS ATV	07 - 08	810*	△		△	△							
XS	250	Quad	06 - 08	544*	△		△	△		848	△		△		
DERBI															
DXR	200	Quad (Front disc)	04 - 07	544*	△		△	△		586	△		△	△	
DXR	200	Quad (Front drum)	04 - 05	2028*						586	△		△	△	
DXR	200	Quad (Front drum)	04 - 05	2028*						611	△		△	△	
DXR	250	Quad (Front disc)	04 - 07	544*	△		△	△		586	△		△	△	
DXR	250	Quad (Front drum)	04 - 05	2028*						586	△		△	△	
DXR	250	Quad (Front drum)	04 - 05	2028*						611	△		△	△	
E-TON															
RXL	150	Viper	07 - 07	2012*						847	△		△	△	
VXL	250	Vector, ST Vector	06 - 07	544*	△		△	△		847	△		△	△	
VTX	300	Vortex, ST Vortex	07 - 07	544*	△		△	△		847	△		△	△	
VXL	300	Vector, ST Vector	07 - 13	544*	△		△	△		847	△		△	△	
GAS GAS															
	50	Wild HP	04 - 07	671*	△		△	△		671	△		△	△	
	200	Wild HP	08 - 09	671*	△		△	△		671	△		△	△	
	240	Wild HP	04 - 06	671*	△		△	△		671	△		△	△	
	250	Wild HP	08 - 08	671*	△		△	△		671	△		△	△	
	300	Wild HP	03 - 05	671*	△		△	△		671	△		△	△	
	450	Wild HP	03 - 09	671*	△		△	△		671	△		△	△	
	515	Wild HP	09 - 09	671*	△		△	△		671	△		△	△	
GOES															
	360	Max	08 - 14	914*			△	△							
	520	Max	07 - 12	914*			△	△		799			△	△	
G	520		07 - 12	914*			△	△		799			△	△	
G	525		12 - 14	914*			△	△		799			△	△	
G	620		11 - 14	914*			△	△		799			△	△	
G	625	A	12 - 14	914*			△	△		799			△	△	
HISUN															
HS	400	UTV Left	15 - 17	638	△		△	△		767			△	△	
HS	400	UTV Right	15 - 17	611	△		△	△							
HS	500	UTV Left	15 - 17	638	△		△	△		767			△	△	
HS	500	UTV Right	15 - 17	611	△		△	△							
HS	700	UTV Left	15 - 17	638	△		△	△		767			△	△	
HS	700	UTV Right	15 - 17	611	△		△	△							
HS	700	UTV Left (2 cal.rear) Left	15 - 17	638	△		△	△		638	△		△	△	
HS	700	UTV Left (2 cal.rear) Right	15 - 17	611	△		△	△		611	△		△	△	
HS	800	UTV (2 cal.rear) Left	15 - 17	638	△		△	△		638	△		△	△	
HS	800	UTV (2 cal.rear) Right	15 - 17	611	△		△	△		611	△		△	△	
HONDA															
ATC	70	all models	78 - 85							2069					
ATC	70	K1	76 - 77							2012					
TRX	70		86 - 87	2048*						2041					
ATC	80		76 - 78							2019					
ATC	90	K1, K2, K3	73 - 78							2019					
TRX	90		93 - 01	2012*						2019					
ATC	110	all models	79 - 85							2019					
ATC	125	ME, MF, MG, MH	84 - 87	2012						2019					
TRX	125		85 - 88	2012*						2019					
ATC	185	A, S, SB	80 - 83	2012						2019					
ATC	200		81 - 83	2012						2019					
ATC	200	E Big Red	82 - 83	2012						2019					
ATC	200	ES Big Red	84 - 84	2012						2019					
ATC	200	M	84 - 85	2012						2019					
ATC	200	S	84 - 86	2012						2019					
ATC	200	X	83 - 85	592	△		△	△		562	△		△	△	
ATC	200	X	86 - 87	592	△		△	△		592	△		△	△	
TLR	200	Fatcat	86 - 87	2013						2013					

* = 2 sets required / 2 jeux pour l'Avant.
△ = Available quality / Qualité disponible.
To select compound for off-road front/rear - see page 21-23 / Pour sélectionner vos plaquettes off-road avant/arriére - voir page 21-23.





COMPOUND CHOICE

5xx - 9xx = ATV/UTV Brake Pads
2xxx = Brake Shoes



COMPOUND CHOICE

5xx - 9xx = ATV/UTV Brake Pads
2xxx = Brake Shoes

					HF	ATS	SI	RSI	PSI		HF	ATS	SI	RSI	PSI
HONDA															
TLR	200	G, H	86 - 87	2013						2057					
TR	200		86 - 87	2013						2013					
TRX	200		84 - 84	2044*						2019					
TRX	200		90 - 91	2083*						2019					
TRX	200	D Type II	91 - 97	2083*						2019					
TRX	200	SX	86 - 88	2083*						2019					
ATC	250	ES, SX	85 - 87	2019						2024					
ATC	250	R	81 - 81	536	△		△	△		2014					
ATC	250	R	82 - 84	584	△		△	△		562	△		△	△	
ATC	250	R	85 - 86	558	△		△	△		558	△		△	△	
ATC	250	X	85 - 85	558	△		△	△		562	△		△	△	
FL	250	Odyssey	77 - 84	525	△					2019					
FL	250	Odyssey	84 - 84	529	△					2019					
MT	250	K1	74 - 76	2023						2023					
MTX	250	R	86 - 86	558	△		△	△							
TL	250		75 - 76	2013						2013					
TRX	250		85 - 87	2044*						2024					
TRX	250	EX Sportrax	01 - 08	592*	△		△	△		2055					
TRX	250	R	86 - 89	603*	△		△	△		558	△		△	△	
TRX	250	R Fourtrax	88 - 88	603*	△		△	△		558	△		△	△	
TRX	250	Recon	97 - 14	2083*						2055					
TRX	250	X	08 - 13	592*	△		△	△		2055					
TRX	250	X Fourtrax	87 - 87	603*	△		△	△		558	△		△	△	
TRX	250	X Fourtrax	88 - 92	584*	△		△	△		584	△		△	△	
TRX	300		88 - 00							2024					
TRX	300	4WD	88 - 00	2085*						2024					
TRX	300	EX	93 - 00	592*	△		△	△		562	△		△	△	
TRX	300	EX Sportrax	01 - 08	592*	△		△	△		592	△		△	△	
TRX	300	X	09 - 09	592*	△		△	△		592	△		△	△	
ATC	350	Odyssey	85 - 85	558	△		△	△		562	△		△	△	
ATC	350	X	85 - 85	558	△		△	△		562	△		△	△	
ATC	350	X	86 - 89	603	△		△	△		562	△		△	△	
FL	350	R Odyssey	85 - 87	2044*						610	△				
TRX	350	all models	86 - 89	2045						2046					
TRX	350	Rancher /ES 2x4, 4x4	00 - 09	2085*						2207					
FL	400	R Pilot	89 - 90	2044*						610	△				
TRX	400	AT	04 - 11	2085*						2207					
TRX	400	EX Sportrax	01 - 08	592*	△		△	△		592	△		△	△	
TRX	400	Fourtrax EX	99 - 00	592*	△		△	△		592	△		△	△	
TRX	400	FW Fourtrax Foreman	95 - 02	2085*						2207					
TRX	400	X	09 - 12	592*	△		△	△		592	△		△	△	
TRX	420	FA / FPA	09 - 13	592*	△		△	△		813			△	△	
TRX	420	FPE / FPM 4x4	09 - 14	592*	△		△	△							
TRX	450	EX Sportrax	01 - 05	592*	△		△	△		592	△		△	△	
TRX	450	Foreman ES, Foreman S	98 - 04	2085*						2207					
TRX	450	R	04 - 09	694*	△		△	△		813			△	△	
	500	Pioneer	15 - 20	982*			△	△	△	976			△	△	△
TRX	500	all models	05 - 14	829*			△			2046					
TRX	500	Foreman, Rubicon	00 - 09	2085*						2072					
TRX	650	FA Rincon	03 - 05	2085*						813			△	△	
TRX	650	FGA Rincon	04 - 05	2085*						813			△	△	
TRX	680	FA6 Rincon	06 - 15	829*			△			813			△	△	
TRX	680	FGA6 Rincon	06 - 15	829*			△			813			△	△	
	700	Pioneer	14 - 21	982*			△	△	△	976			△	△	△
TRX	700	XX	08 - 12	694*	△		△	△		829			△		
	1000	Pioneer	16 - 21	981*			△	△	△	975*			△	△	△
	1000	Talon	21 - 21	981*			△	△	△	975*			△	△	△
	1000	Talon R	19 - 21	981*			△	△	△	975*			△	△	△
	1000	Talon X	19 - 21	981*			△	△	△	975*			△	△	△
	1000	Talon X-4	20 - 20	981*			△	△	△	975*			△	△	△
HYOSUNG															
TE	400		05 - 06	536*	△		△	△		649	△		△	△	
TE	450		07 - 11	536*	△		△	△		649	△		△	△	
JOHN DEERE															
HPX	350	Gator	10 - 14	908*			△	△		908*			△	△	
	500	Buck Left	05 - 05	754	△		△	△	△	767			△	△	

* = 2 sets required / 2 jeux pour l'Avant.
△ = Available quality / Qualité disponible.
To select compound for off-road front/rear - see page 21-23 / Pour sélectionner vos plaquettes off-road avant/arriére - voir page 21-23.





COMPOUND CHOICE

5xx - 9xx = ATV/UTV Brake Pads
2xxx = Brake Shoes



COMPOUND CHOICE

5xx - 9xx = ATV/UTV Brake Pads
2xxx = Brake Shoes

					HF	ATS	SI	RSI	PSI		HF	ATS	SI	RSI	PSI
JOHN DEERE															
	500	Buck Right	05 - 05	767			△	△							
	500	Buck EX, EXT Left	05 - 05	754	△		△	△	△	767			△	△	
	500	Buck EX, EXT Right	05 - 05	767			△	△							
	500	Trail Buck Left	05 - 05	754	△		△	△	△	767			△	△	
	500	Trail Buck Right	05 - 05	767			△	△							
XUV	625	Gator	11 - 11	912*		△	△	△							
	650	Trail Buck Left	05 - 05	754	△		△	△	△	767			△	△	
	650	Trail Buck Right	05 - 05	767			△	△							
	650	Trail Buck EX, EXT Left	05 - 05	754	△		△	△	△	767			△	△	
	650	Trail Buck EX, EXT Right	05 - 05	767			△	△							
XUV	825	Gator	11 - 11	912*		△	△	△							
XUV	855	D Gator	11 - 11	912*		△	△	△							
KAWASAKI															
KLF	110	Mojave	87 - 88	2015*						2183					
KLT	110		84 - 86	2015						2183					
KLT	160		85 - 85	2015						2183					
KLF	185	Bayou	85 - 85							2038					
KLF	185	Bayou	86 - 88	2040*						2038					
KLT	185		86 - 87	2015						2183					
KLT	200		81 - 84	2015						2040					
KLF	220	Bayou	88 - 02	2040*						2038					
KLT	250		82 - 83	2015						2040					
KLT	250	Police	84 - 84	2015						2040					
KLT	250	Prairie	83 - 85	2015						2040					
KSF	250	Mojave	87 - 02	591*	△		△	△		592	△		△	△	
KXF	250	Tecate	87 - 88	591*	△		△	△		592	△		△	△	
KXT	250	Tecate	84 - 84							544	△		△	△	
KXT	250	Tecate	85 - 86	546	△		△	△		586	△		△	△	
KXT	250	Tecate	87 - 88	591	△		△	△		592	△		△	△	
KAF	300	Mule 500	92 - 95	2053*											
KAF	300	Mule 550	03 - 05	2053*											
KEF	300	Lakota	95 - 04	591*	△		△	△		592	△		△	△	
KLF	300	Bayou	86 - 87	2054*						2038*					
KLF	300	Bayou	88 - 04	546*	△		△	△		2038*					
KLF	300	Bayou 4x4 Left	89 - 05	611	△		△	△		2197					
KLF	300	Bayou 4x4 Right	89 - 05	638	△		△	△							
KVF	300	Brute Force	13 - 17	810*	△		△	△		810	△		△	△	
KVF	300	Prairie	99 - 02	536*	△		△	△							
KVF	300	Prairie 4x4	99 - 05	536*	△		△	△							
KVF	360	Prairie 2x4, 4x4	03 - 08	536*	△		△	△							
KFX	400		02 - 05	592*	△		△	△		649	△		△	△	
KLF	400	Bayou Left	93 - 99	611	△		△	△		2197					
KLF	400	Bayou Right	93 - 99	638	△		△	△							
KVF	400	Prairie	97 - 98	536*	△		△	△		2197					
KVF	400	Prairie 2x4	99 - 01	536*	△		△	△							
KVF	400	Prairie 4x4	99 - 02	536*	△		△	△							
KFX	450	Left	07 - 15	801			△	△		592	△		△	△	
KFX	450	Right	07 - 15	798			△	△							
KVF	650	Brute Force 4x4 Left	05 - 11	801			△	△							
KVF	650	Brute Force 4x4 Right	05 - 11	798			△	△							
KVF	650	Brute Force 4x4i Left	05 - 11	611	△		△	△							
KVF	650	Brute Force 4x4i Right	05 - 11	638	△		△	△							
KVF	650	Prairie Left	01 - 03	801			△	△							
KVF	650	Prairie Right	01 - 03	798			△	△							
KFX	700	V-Force Left	04 - 13	801			△	△							
KFX	700	V-Force Right	04 - 13	798			△	△							
KSV	700	V-Force Left	04 - 11	801			△	△							
KSV	700	V-Force Right	04 - 11	798			△	△							
KVF	700	Prairie Left	04 - 13	801			△	△							
KVF	700	Prairie Right	04 - 13	798			△	△							
KRF	750	Teryx 4x4 Left	08 - 13	611	△		△	△							
KRF	750	Teryx 4x4 Left	08 - 13	638	△		△	△							
KVF	750	Brute Force 4x4i Left	05 - 15	611	△		△	△							
KVF	750	Brute Force 4x4i Right	05 - 15	638	△		△	△							
	800	Mule Pro FX Left	15 - 17	611	△		△	△							
	800	Mule Pro FX Right	15 - 17	638	△		△	△							
KRF	800	Teryx BEF/CEF/DEF Left	14 - 17	611	△		△	△							

* = 2 sets required / 2 jeux pour l'Avant.
△ = Available quality / Qualité disponible.
To select compound for off-road front/rear - see page 21-23 / Pour sélectionner vos plaquettes off-road avant/arriére - voir page 21-23.





COMPOUND CHOICE

5xx - 9xx = ATV/UTV Brake Pads
2xxx = Brake Shoes



COMPOUND CHOICE

5xx - 9xx = ATV/UTV Brake Pads
2xxx = Brake Shoes

					HF	ATS	SI	RSI	PSI		HF	ATS	SI	RSI	PSI
KAWASAKI															
KRF	800	Teryx BEF/CEF/DEF Right	14 - 17	638	△		△	△							
KRT	800	Teryx 4 BEF/CEF/DEF Left	14 - 17	611	△		△	△							
KRT	800	Teryx 4 BEF/CEF/DEF Right	14 - 17	638	△		△	△							
KTM															
SX	450	ATV	08 - 10	866*			△	△		867			△	△	
XC	450	ATV	08 - 10	866*			△	△		867			△	△	
SX	505	ATV	08 - 12	866*			△	△		867			△	△	
XC	505	ATV	08 - 12	866*			△	△		867			△	△	
KYMCO															
	50	MXU	05 - 10	2012*						749	△				
	150	MXU	05 - 17	2012*						749	△				
	250	MXU	06 - 14	810*	△		△	△		775	△		△	△	
	250	Urban Quad	06 - 06	810*	△		△	△		775	△		△	△	
KXR	250		04 - 14	810*	△		△	△		775	△		△	△	
	300	Maxxer	06 - 13	810*	△		△	△		775	△		△	△	
	300	Maxxer Supermoto	15 - 15	810*	△		△	△		775	△		△	△	
	300	MXU	06 - 17	810*	△		△	△		810*	△		△	△	
	400	Maxxer	08 - 10	822*		△	△	△		822		△	△	△	
	400	Maxxer (Parking Brake)	08 - 10							921	△				
	400	MXU	08 - 11	822*		△	△	△		822		△	△	△	
	400	MXU (Parking Brake)	08 - 11							921	△				
	450	i Maxxer	10 - 14	822*		△	△	△		822		△	△	△	
	450	i Maxxer (Parking Brake)	10 - 14							921	△				
	450	i MXU	11 - 14	822*		△	△	△		822		△	△	△	
	450	i MXU (Parking Brake)	11 - 14							921	△				
	500	MXU	06 - 08	810*	△		△	△		810*	△		△	△	
	500	MXU	09 - 14	945*			△	△							
	500	MXU DX	11 - 13	945*			△	△							
	500	UXV 4x4	08 - 14	810*	△		△	△		810	△		△	△	
	550	MXU	12 - 20	945*			△	△		810	△		△	△	
	700	MXU	13 - 20	945*			△	△		810	△		△	△	
UXV	700		14 - 16	945*			△	△							
LAVERDA															
HP	125	Quasar	04 - 04							758		△	△	△	
HP	180	Quasar	04 - 04							758		△	△	△	
	400	Quasar 4x4	04 - 04	758*		△	△	△		758		△	△	△	
	500	Quasar 4x4	04 - 04	758*		△	△	△		758		△	△	△	
	500	Quasar 4x4 C	04 - 04	758*		△	△	△		758		△	△	△	
POLARIS															
		EV-LSV	10 - 11	897*		△	△	△	△	800		△	△	△	
		LSV 4x4	11 - 12	897*		△	△	△	△	800		△	△	△	
		Ranger 48v EV	13 - 18	897*		△	△	△	△	800		△	△	△	
	50	Predator	04 - 14	2048*											
	50	Scrambler	01 - 03	2048*											
	90	Predator	03 - 14	2043*											
	90	Scrambler	01 - 03	2048*											
	90	Sportsman	01 - 15	2048*											
	170	Ranger RZR	09 - 18	905*		△	△	△		906		△	△	△	
	200	Phoenix	05 - 09	544*	△	△	△	△		546	△		△	△	
	200	Phoenix	10 - 14	905*		△	△	△		546	△		△	△	
	200	Sawtooth	06 - 07	544*	△	△	△	△		544	△	△	△	△	
	250	2x4, 4x4	90 - 93	716*	△	△	△	△		717	△	△	△	△	
	250	Big Boss 4x6, 6x6	89 - 93	716*	△	△	△	△		717	△	△	△	△	
	250	Big Boss 4x6, 6x6													
		Middle Axle Brake	89 - 93	717	△	△	△	△							
	250	Cyclone	87 - 87	2028*						643	△				
	250	Trail Blazer	90 - 98	716*	△	△	△	△		717	△	△	△	△	
	250	Trail Blazer	99 - 07	716*	△	△	△	△		755		△	△	△	
	250	Trail Boss	88 - 90	642*	△	△	△	△		643	△				
	250	Trail Boss	91 - 99	716*	△	△	△	△		717	△	△	△	△	
	250	Trail Boss 2x4, 4x4	91 - 92	716*	△	△	△	△		717	△	△	△	△	
	250	Xplorer 4x4	00 - 02	716*	△	△	△	△		755		△	△	△	
	300	2x4, 4x4	94 - 95	716*	△	△	△	△		717	△	△	△	△	
	300	Big Boss 6x6	94 - 94	716*	△	△	△	△		717	△	△	△	△	

* = 2 sets required / 2 jeux pour l'Avant.
△ = Available quality / Qualité disponible.
To select compound for off-road front/rear - see page 21-23 / Pour sélectionner vos plaquettes off-road avant/arriére - voir page 21-23.





COMPOUND CHOICE

5xx - 9xx = ATV/UTV Brake Pads
2xxx = Brake Shoes



COMPOUND CHOICE

5xx - 9xx = ATV/UTV Brake Pads
2xxx = Brake Shoes

POLARIS				HF	ATS	SI	RSI	PSI		HF	ATS	SI	RSI	PSI
300	Big Boss 6x6 Middle Axle Brake	94 - 94	717	△	△	△	△							
300	Hawkeye 2x4, 4x4	06 - 06	822*		△	△	△		822		△	△	△	
300	Hawkeye 2x4, 4x4	07 - 11	716*	△	△	△	△		716	△	△	△	△	
300	Sportsman 4x4	08 - 11	642*	△	△	△	△		642	△	△	△	△	
300	Xplorer 4x4	96 - 99	716*	△	△	△	△		717	△	△	△	△	
300	Xpress 2x4	98 - 99	716*	△	△	△	△		717	△	△	△	△	
300	Xpress L	96 - 97	716*	△	△	△	△		717	△	△	△	△	
325	Magnum 2x4, 4x4	00 - 02	716*	△	△	△	△		755		△	△	△	
325	Trail Boss	00 - 02	716*	△	△	△	△		755		△	△	△	
325	Xpedition	00 - 01	642*	△	△	△	△		755		△	△	△	
325	Xpedition	02 - 02	642*	△	△	△	△		787		△	△	△	
330	ATP	04 - 05	716*	△	△	△	△		716*	△	△	△	△	
330	ATP	06 - 05	716*	△	△	△	△		787*		△	△	△	
330	E Trail Blazer	08 - 12	642*	△	△	△	△		787		△	△	△	
330	Magnum 2x4, 4x4	03 - 13	716*	△	△	△	△		787		△	△	△	
330	Trail Boss	03 - 14	716*	△	△	△	△		755		△	△	△	
335	Sportsman 4x4	99 - 02	716*	△	△	△	△		755		△	△	△	
350	Big Boss	93 - 93	716*	△	△	△	△		717	△	△	△	△	
350	Big Boss Middle Axle Brake	93 - 93	717	△	△	△	△							
350	L 2x4, 4x4	90 - 90	716*	△	△	△	△		717	△	△	△	△	
350	L 4x4	93 - 93	716*	△	△	△	△		717	△	△	△	△	
350	Sportsman 4x4	93 - 93	716*	△	△	△	△		717	△	△	△	△	
350	Trail Boss 2x4	85 - 87	2028*											
350	Trail Boss 2x4, 4x4	88 - 89	716*	△	△	△	△		717	△	△	△	△	
350	Trail Boss L 2x4	91 - 93	716*	△	△	△	△		717	△	△	△	△	
350	Trail Boss L 4x4	91 - 91	716*	△	△	△	△		717	△	△	△	△	
400	Big Boss L 6x6	96 - 96	716*	△	△	△	△		717	△	△	△	△	
400	Big Boss L 6x6													
	Middle Axle Brake	96 - 96	756		△	△	△							
400	L 2x4	94 - 95	716*	△	△	△	△		717	△	△	△	△	
400	L 4x4	94 - 94	716*	△	△	△	△		717	△	△	△	△	
400	Scrambler 2x4, 4x4	00 - 03	716*	△	△	△	△		755		△	△	△	
400	Scrambler 4x4	98 - 98	716*	△	△	△	△		717	△	△	△	△	
400	Scrambler 4x4	99 - 03	716*	△	△	△	△		755		△	△	△	
400	Scrambler L 4x4	95 - 97	716*	△	△	△	△		717	△	△	△	△	
400	Sport	99 - 00	716*	△	△	△	△		755		△	△	△	
400	Sport L	94 - 98	716*	△	△	△	△		717	△	△	△	△	
400	Sportsman	01 - 13	716*	△	△	△	△		755		△	△	△	
400	Sportsman L 4x4	94 - 97	716*	△	△	△	△		717	△	△	△	△	
400	Trail Blazer	03 - 04	716*	△	△	△	△		755		△	△	△	
400	Xplorer L 4x4	95 - 99	716*	△	△	△	△		717	△	△	△	△	
400	Xplorer L 4x4	00 - 02	716*	△	△	△	△		755		△	△	△	
400	Xpress L	96 - 97	716*	△	△	△	△		717	△	△	△	△	
425	2x4, 4x4 Magnum	95 - 98	716*	△	△	△	△		717	△	△	△	△	
425	Magnum 6x6	96 - 96	716*	△	△	△	△		717	△	△	△	△	
425	Magnum 6x6 Middle Axle Brake	96 - 96	756		△	△	△							
425	Xpedition 4x4	00 - 03	716*	△	△	△	△		755		△	△	△	
450	Outlaw MXR	09 - 11	898*		△	△	△	△	642	△	△	△	△	
450	Outlaw S	08 - 08	898*		△	△	△	△	642	△	△	△	△	
450	Sportsman	06 - 09	716*	△	△	△	△		787		△	△	△	
455	Diesel EBS 4x4	99 - 01	716*	△	△	△	△		755		△	△	△	
500	ATP HO	04 - 05	716*	△	△	△	△		716*	△	△	△	△	
500	Big Boss 6x6	98 - 99	716*	△	△	△	△		717	△	△	△	△	
500	Big Boss 6x6 Middle Axle Brake	98 - 99	717	△	△	△	△							
500	E Scrambler 2x4, 4x4	08 - 11	642*	△	△	△	△		787		△	△	△	
500	Magnum 2x4, 4x4	02 - 07	716*	△	△	△	△		787		△	△	△	
500	Magnum 4x4	00 - 01	716*	△	△	△	△		755		△	△	△	
500	Outlaw	06 - 09	716*	△	△	△	△		716	△	△	△	△	
500	Predator	03 - 13	716*	△	△	△	△		716	△	△	△	△	
500	Predator e	06 - 13	716*	△	△	△	△		787		△	△	△	
500	Ranger 2x4	08 - 07	897*		△	△	△	△	800		△	△	△	
500	Ranger 2x4 EFi	08 - 13	897*		△	△	△	△	800		△	△	△	
500	Ranger 2x4, 4x4, 6x6	02 - 13	800*		△	△	△		800*		△	△	△	
500	Ranger 4x4	12 - 13	897*		△	△	△	△	800		△	△	△	
500	Ranger 6x6	00 - 02	716*	△	△	△	△							
500	Ranger XP	06 - 09	800*		△	△	△		800		△	△	△	
500	Revolver	06 - 06	642*	△	△	△	△		642	△	△	△	△	
500	Scrambler 2x4	01 - 02	716*	△	△	△	△		755		△	△	△	

* = 2 sets required / 2 jeux pour l'Avant.
△ = Available quality / Qualité disponible.
To select compound for off-road front/rear - see page 21-23 / Pour sélectionner vos plaquettes off-road avant/arriére - voir page 21-23.





COMPOUND CHOICE

5xx - 9xx = ATV/UTV Brake Pads
2xxx = Brake Shoes



COMPOUND CHOICE

5xx - 9xx = ATV/UTV Brake Pads
2xxx = Brake Shoes

POLARIS															
	500	Scrambler 4x4	97 - 97	716*	△	△	△	△		717	△	△	△	△	
	500	Scrambler 4x4	98 - 13	716*	△	△	△	△		755		△	△	△	
	500	Sportsman 4x4	96 - 14	716*	△	△	△	△		717	△	△	△	△	
	500	Sportsman 6x6	00 - 11	716*	△	△	△	△		757		△	△	△	
	500	Sportsman EBS 4x4	98 - 02	716*	△	△	△	△		755		△	△	△	
	500	Sportsman HO (from 16.12.2008)	09 - 14	642*	△	△	△	△		899		△	△	△	
	500	Sportsman HO (to 15.12.2008)	03 - 08	642*	△	△	△	△		787		△	△	△	
	500	Xplorer 4x4	97 - 97	716*	△	△	△	△		717	△	△	△	△	
	525	Outlaw	07 - 13	898*		△	△	△	△	642	△	△	△	△	
	525	Outlaw IRS	08 - 13	898*		△	△	△	△	642	△	△	△	△	
	525	Outlaw S	08 - 11	898*		△	△	△	△	642	△	△	△	△	
	550	Sportsman	11 - 14	899*		△	△	△		899		△	△	△	
	550	Sportsman EPS	10 - 14	899*		△	△	△		899		△	△	△	
	550	Sportsman EPS X2	14 - 14	899*		△	△	△		899		△	△	△	
	550	Sportsman Touring EPS	10 - 12	899*		△	△	△		899		△	△	△	
	550	Sportsman X2	10 - 14	899*		△	△	△		899		△	△	△	
	550	Sportsman XP	09 - 12	899*		△	△	△		899		△	△	△	
	550	Sportsman XP EPS	09 - 14	899*		△	△	△		899		△	△	△	
	550	Sportsman XP Touring EPS	12 - 14	899*		△	△	△		899		△	△	△	
	570	Ranger RZR EFi	12 - 13	898*		△	△	△	△	642	△	△	△	△	
	600	Sportsman	03 - 06	642*	△	△	△	△		787*		△	△	△	
	700	MVRS 4x4	08 - 08	897*		△	△	△	△	897		△	△	△	△
	700	Ranger 4x4 EFi	08 - 08	897*		△	△	△	△	800		△	△	△	
	700	Ranger 6x6 EFi	12 - 13	897*		△	△	△	△	800		△	△	△	
	700	Sportsman	02 - 09	642*	△	△	△	△		787*		△	△	△	
	700	Sportsman MV 700	05 - 06	642*	△	△	△	△		787		△	△	△	
	800	MVRS 4x4	08 - 08	897*		△	△	△	△	897		△	△	△	△
	800	Ranger 4x4 EFi	10 - 10	897*		△	△	△	△	897		△	△	△	△
	800	Ranger 6x6 EFi	12 - 15	897*		△	△	△	△	897		△	△	△	△
	800	Ranger Crew	12 - 15	897*		△	△	△	△	897		△	△	△	△
	800	Ranger RZR EFi	08 - 14	898*		△	△	△	△	642	△	△	△	△	
	800	Ranger RZR S EFi	09 - 15	898*		△	△	△	△	642	△	△	△	△	
	800	Ranger RZR4 EFi	12 - 14	897*		△	△	△	△	800		△	△	△	
	800	Ranger XP	12 - 13	897*		△	△	△	△	800		△	△	△	
	800	RZR	08 - 15	898*		△	△	△	△	642	△	△	△	△	
	800	RZR-4	10 - 14	897*		△	△	△	△	800		△	△	△	
	800	Sportsman (from 16.12.2008)	09 - 14	642*	△	△	△	△		899		△	△	△	
	800	Sportsman (to 15.12.2008)	05 - 08	642*	△	△	△	△		787		△	△	△	
	850	Forest	15 - 15	899*		△	△	△		899		△	△	△	
	850	Scrambler	15 - 15	899*		△	△	△		899		△	△	△	
	850	Scrambler HO EPS	13 - 15	899*		△	△	△		899		△	△	△	
	850	Scrambler MD	15 - 15	899*		△	△	△		899		△	△	△	
	850	Scrambler XP HO EPS	14 - 15	899*		△	△	△		899		△	△	△	
	850	Sportsman	11 - 13	899*		△	△	△		899		△	△	△	
	850	Sportsman MV	12 - 12	899*		△	△	△		899		△	△	△	
	850	Sportsman Touring	14 - 15	899*		△	△	△		899		△	△	△	
	850	Sportsman Touring EPS	10 - 13	899*		△	△	△		899		△	△	△	
	850	Sportsman Touring HO EPS	13 - 14	899*		△	△	△		899		△	△	△	
	850	Sportsman Touring MD	15 - 15	899*		△	△	△		899		△	△	△	
	850	Sportsman X2	11 - 11	899*		△	△	△		899		△	△	△	
	850	Sportsman XP	09 - 14	899*		△	△	△		899		△	△	△	
	850	Sportsman XP EPS	09 - 14	899*		△	△	△		899		△	△	△	
	850	Sportsman XP HO EPS	13 - 14	899*		△	△	△		899		△	△	△	
	850	Sportsman XP HO EPS MD	15 - 15	899*		△	△	△		899		△	△	△	
	850	Sportsman XP Touring EPS	15 - 15	899*		△	△	△		899		△	△	△	
	900	Ranger 4x4 Diesel	10 - 14	897*		△	△	△	△	897		△	△	△	△
	900	Ranger RZR4 XP EFi	12 - 15	897*		△	△	△	△	897		△	△	△	△
	900	Ranger RZR4 XP4 EFi	12 - 14	897*		△	△	△	△	897		△	△	△	△
RZR	900	50/55/60 Inch	15 - 20	970*			△	△	△	898		△	△	△	△
RZR-S	900	60 Inch	20 - 20	970*			△	△	△	898		△	△	△	△
	925	RZR XP Turbo	16 - 19	954*			△	△		897		△	△	△	△
	925	RZR XP Turbo	20 - 20	954*			△	△		978*			△	△	△
	925	RZR XP4 Turbo	16 - 19	954*			△	△		897		△	△	△	△
	925	RZR XP4 Turbo	20 - 20	954*			△	△		978*			△	△	△
	925	RZR XP4 Turbo S	19 - 20	977*			△	△		897*		△	△	△	△
	925	RZR XP4 Turbo S Velocity	19 - 20	977*			△	△		897*		△	△	△	△
	1000	Forest	15 - 15	899*		△	△	△		899		△	△	△	
	1000	General EPS	16 - 18	897*		△	△	△	△	898		△	△	△	△

* = 2 sets required / 2 jeux pour l'Avant.
△ = Available quality / Qualité disponible.
To select compound for off-road front/rear - see page 21-23 / Pour sélectionner vos plaquettes off-road avant/arriére - voir page 21-23.





COMPOUND CHOICE

5xx - 9xx = ATV/UTV Brake Pads
2xxx = Brake Shoes



COMPOUND CHOICE

5xx - 9xx = ATV/UTV Brake Pads
2xxx = Brake Shoes

					HF	ATS	SI	RSI	PSI		HF	ATS	SI	RSI	PSI
POLARIS															
	1000	Ranger RZR XP	14 - 14	897*		△	△	△	△	897		△	△	△	△
	1000	Scrambler MD	15 - 18	899*		△	△	△		899		△	△	△	
	1000	Scrambler XP	15 - 18	899*		△	△	△		899		△	△	△	
	1000	Scrambler XP HO EPS	14 - 14	899*		△	△	△		899		△	△	△	
	1000	Sportsman MD	15 - 18	899*		△	△	△		899		△	△	△	
	1000	Sportsman Touring	15 - 18	899*		△	△	△		899		△	△	△	
	1000	Sportsman XP	15 - 18	899*		△	△	△		899		△	△	△	
RZR	1000	60 Inch	16 - 20	970*			△	△	△	898		△	△	△	△
RZR-S	1000	60 Inch	20 - 20	970*			△	△	△	898		△	△	△	△
	1050	MV Diesel Crew	13 - 18	897*		△	△	△	△	897		△	△	△	△
SUZUKI															
ALT	50		83 - 84							2020					
LT	50		84 - 02							2020					
LT-A	50	Quadmaster	01 - 05	2101						2017					
LT-Z	50	Quadsport	06 - 20	2101*						2017					
LT	80		87 - 06	2101*						2104					
LT-Z	90	Quadsport	07 - 20	2017*						2104					
ALT	125		84 - 86							2016					
ALT	125	D	83 - 83							2107					
LT	125	D	83 - 83							2107					
LT	125	E-H	84 - 87							2016					
LT	160		89 - 92	2181*						2016					
LT-F	160		91 - 04	2181*						2016					
ALT	185		85 - 87							2016					
LT	185		84 - 87							2016					
LT	230		85 - 86	2051*						2016					
LT	230		85 - 88	591*	△		△	△		584	△		△	△	
LT	230		86 - 93	591*	△		△	△		592	△		△	△	
LT-F	230		86 - 87	2051*						2016					
LT	250		85 - 86	2051*						2098					
LT	250		85 - 87	591*	△		△	△		584	△		△	△	
LT	250		88 - 94	591*	△		△	△		649	△		△	△	
LT	250		89 - 90	591*	△		△	△		592	△		△	△	
LT	250	4WD	87 - 98	2053*						2110					
LT-F	250		88 - 01	2053*						2110					
LT-F	250	4WD V, W Quadrunner	97 - 98	2053*						2098					
LT-F	250	Ozark	03 - 13	536*	△		△	△							
LT-Z	250	Quad Sport	04 - 11	536*	△		△	△							
LT-F	280	4WD	91 - 98							2052					
LT	300		87 - 89	2051*						2098					
LT-F	300		88 - 90	2051						2052					
LT-F	300	King Quad	91 - 02							2052					
LT-F	300	King Quad Left	02 - 02	611	△		△	△							
LT-F	300	King Quad Right	02 - 02	638	△		△	△							
KLT-A	400	King Quad Left	08 - 14	835			△	△							
KLT-A	400	King Quad Right	08 - 14	836			△	△							
KLT-F	400	King Quad Left	08 - 14	835			△	△							
KLT-F	400	King Quad Right	08 - 14	836			△	△							
LT-A	400	Eiger 2WD/4WD	02 - 07	536*	△		△	△		2018					
LT-A	400	King Quad Left	08 - 14	835			△	△							
LT-A	400	King Quad Right	08 - 14	836			△	△							
LT-F	400	Eiger 2WD/4WD	02 - 07	536*	△		△	△		2018					
LT-F	400	King Quad Left	08 - 14	835			△	△							
LT-F	400	King Quad Right	08 - 14	836			△	△							
LT-Z	400	Quad Sport	02 - 19	592*	△		△	△		649	△		△	△	
LT-A	450	King Quad Left	08 - 14	835			△	△							
LT-A	450	King Quad Right	08 - 14	836			△	△							
LT-R	450	Left	06 - 12	611	△		△	△		649	△		△	△	
LT-R	450	Right	06 - 12	638	△		△	△							
LT	500		87 - 95	591*	△		△	△		649	△		△	△	
LT-A	500	F Vinson	02 - 02	536*	△		△	△							
LT-A	500	FY Quadmaster Left	00 - 08	611	△		△	△							
LT-A	500	FY Quadmaster Right	00 - 08	638	△		△	△							
LT-A	500	King Quad Left	11 - 14	835			△	△							
LT-A	500	King Quad Right	11 - 14	836			△	△							
LT-F	500	F Left	98 - 07	638	△		△	△							
LT-F	500	F Right	98 - 07	611	△		△	△							

* = 2 sets required / 2 jeux pour l'Avant.
△ = Available quality / Qualité disponible.
To select compound for off-road front/rear - see page 21-23 / Pour sélectionner vos plaquettes off-road avant/arriére - voir page 21-23.





COMPOUND CHOICE

5xx - 9xx = ATV/UTV Brake Pads
2xxx = Brake Shoes



COMPOUND CHOICE

5xx - 9xx = ATV/UTV Brake Pads
2xxx = Brake Shoes

					HF	ATS	SI	RSI	PSI		HF	ATS	SI	RSI	PSI
SUZUKI															
LT-A	700	King Quad Left	05 - 11	835			△	△							
LT-A	700	King Quad Right	05 - 11	836			△	△							
LT-V	700	Quadrunner Twin Peaks Left	04 - 06	801			△	△							
LT-V	700	Quadrunner Twin Peaks Right	04 - 06	798			△	△							
LT-A	750	King Quad Left	08 - 14	835			△	△							
LT-A	750	King Quad Right	08 - 14	836			△	△							
SYM															
	200	Quadlander	12 - 13	810*	△		△	△		847	△		△	△	
	200	Trackrunner	05 - 08	810*	△		△	△		847	△		△	△	
	250	Quadlander	06 - 07	810*	△		△	△		847	△		△	△	
	300	City Max	06 - 07	810*	△		△	△		847	△		△	△	
	300	Quadlander	06 - 13	810*	△		△	△		810	△		△	△	
	600	Quad Raider	08 - 15	810*	△		△	△		810	△		△	△	
TGB															
	50	Buffalo	03 - 03							688	△				
YAMAHA															
YFM	50	Raptor	04 - 11	2028*						2034					
YF	60	S Moto 4	86 - 86							2050					
YT	60	Tri Zinger	84 - 85							2050					
YFM	80		87 - 88	2050*						2034					
YFM	80		92 - 94	2028*						2034					
YFM	80	Badger	95 - 07	2028*						2034					
YFM	80	Grizzly	05 - 08	2028*						2034					
YFM	80	N, S Moto 4	85 - 86							2034					
YFM	80	Raptor	02 - 08	2028*						2034					
YFM	90	RY Raptor	09 - 15	2028*						586	△		△	△	
YFM	100	Champ	87 - 88	2050*						2034					
YFM	100	Champ	89 - 91	2028*						2034					
YFA	125	1 D, E Breeze	92 - 93	2028*						2034					
YFA	125	1 F Breeze	94 - 94	2028*						2034					
YFA	125	1 G-M Breeze	95 - 07	2028*						2034					
YFA	125	1 W, A, B Breeze	89 - 91	2028*						2034					
YFM	125	Grizzly	04 - 13	2028*						2034					
YT	125	Tri Moto	80 - 81							617	△				
YT	125	Tri Moto	82 - 85							576	△		△	△	
YT	175	Tri Moto	82 - 83							576	△		△	△	
YFM	200	DXS-DXW Moto 4	86 - 87	2028*						576	△		△	△	
YFM	200	N Moto 4	85 - 89	2028*						576	△		△	△	
YFS	200	R Blaster	03 - 06	536*	△		△	△		592	△		△	△	
YFS	200	U-P Blaster	88 - 02							637	△		△	△	
YTM	200	EK, EL Tri Moto	83 - 84							576	△		△	△	
YTM	200	ERN Tri Moto	85 - 85							576	△		△	△	
YTM	200	K-N Tri Moto	83 - 85							576	△		△	△	
YFM	225	Moto 4	86 - 88	2028*						576	△		△	△	
YTM	225	DRN, DRS Tri Moto	85 - 86							576	△		△	△	
YTM	225	DXK, DXN Tri Moto	83 - 85							576	△		△	△	
YFB	250	Timberwolf	92 - 94	2028*						2035					
YFB	250	Timberwolf	95 - 96	2035*						2035					
YFB	250	Timberwolf 4WD	94 - 03	2035*						2035					
YFM	250		89 - 91	2035*						576	△		△	△	
YFM	250	AN Bruin 2x4	05 - 07	536*	△		△	△							
YFM	250	Bear Tracker	01 - 04	536*	△		△	△							
YFM	250	Raptor Left	09 - 14	850			△	△		592	△		△	△	
YFM	250	Raptor Right	09 - 14	849			△	△							
YFM	250	Timberwolf (YFB 250 G)	95 - 95	2035*						2035					
YFU1TW	250	Pro Hauler	89 - 89	2035*						2177					
YFU1W	250	Pro Hauler	89 - 90	2035*						2177					
YTZ	250	Tri Moto	85 - 86	575	△		△	△		575	△		△	△	
YFM	300	Grizzly	12 - 13	544*	△		△	△		586	△		△	△	
YFM	300	Warrior	89 - 89	536	△		△	△		584	△		△	△	
YFM	350	Big Bear Special Edition	99 - 99	2178*						2066					
YFM	350	Bruin 2x4, 4x4	04 - 07	536*	△		△	△							
YFM	350	ERT, ERU	87 - 88	2028*						576	△		△	△	
YFM	350	ERW, ERA-G	89 - 95	2035*						576	△		△	△	
YFM	350	FWB L, LC Big Bear	99 - 99	536*	△		△	△		2066					

* = 2 sets required / 2 jeux pour l'Avant.
△ = Available quality / Qualité disponible.
To select compound for off-road front/rear - see page 21-23 / Pour sélectionner vos plaquettes off-road avant/arriére - voir page 21-23.





COMPOUND CHOICE

5xx - 9xx = ATV/UTV Brake Pads
2xxx = Brake Shoes



COMPOUND CHOICE

5xx - 9xx = ATV/UTV Brake Pads
2xxx = Brake Shoes

YAMAHA					HF	ATS	SI	RSI	PSI		HF	ATS	SI	RSI	PSI
YFM	350	FWH, FWJ, FWK Big Bear	96 - 98	2178*						2066					
YFM	350	FWT, FWU Big Bear	87 - 88	2114*						576	△		△	△	
YFM	350	FWW, FWA-G Big Bear	89 - 95	2178*						576	△		△	△	
YFM	350	FXG-FXM Wolverine	95 - 11	536*	△		△	△		592	△		△	△	
YFM	350	R Raptor	04 - 14	592*	△		△	△		592	△		△	△	
YFM	350	UH, UJ, UK	96 - 98	2178*						2066					
YFM	350	XG,XH Warrior	95 - 96	536*	△		△	△		592	△		△	△	
YFM	350	XT, XU Warrior	87 - 88	575*	△		△	△		592	△		△	△	
YFM	350	XW, XA-M Warrior	89 - 07	536*	△		△	△		536	△		△	△	
YFP	350	U Terrapro	88 - 88	2035*						2177					
YFZ	350	Banshee	87 - 89	575*	△		△	△		592	△		△	△	
YFZ	350	Banshee	90 - 06	536*	△		△	△		592	△		△	△	
YFM	400	FAM Kodiak	00 - 02	536*	△		△	△		754	△		△	△	△
YFM	400	FAR Kodiak Automatic	03 - 03	536*	△		△	△		2066					
YFM	400	FWN Big Bear 4WD	00 - 11	536*	△		△	△		754	△		△	△	△
YFM	400	FWNH Big Bear-Buckmaster													
		4WD	00 - 11	536*	△		△	△		754	△		△	△	△
YFM	400	Kodiak	93 - 99	2178*						2066					
YFM	400	N Big Bear 2WD	00 - 11	536*	△		△	△		754	△		△	△	△
YFM	450	FA Kodiak	03 - 07	536*	△		△	△		754	△		△	△	△
YFM	450	Wolverine	06 - 10	536*	△		△	△		754	△		△	△	△
YFZ	450	S Left	04 - 05	638	△		△	△		592	△		△	△	
YFZ	450	S Right	04 - 05	611	△		△	△							
YFZ	450	S Left	06 - 09	638	△		△	△		709	△		△	△	
YFZ	450	S Right	06 - 09	611	△		△	△							
YXR	450	Rhino Left	06 - 09	611	△		△	△		816			△	△	
YXR	450	Rhino Right	06 - 09	638	△		△	△							
YFM	550	FGPW Grizzly Left	09 - 16	850			△	△		852			△	△	
YFM	550	FGPW Grizzly Right	09 - 16	849			△	△		851			△	△	
YFM	600	4x4 Grizzly	98 - 01	592*	△		△	△		2066					
	660	Rhino Left	05 - 08	611	△		△	△		816			△	△	
	660	Rhino Right	05 - 08	638	△		△	△							
YFM	660	FWAP 4x4 Grizzly	02 - 08	592*	△		△	△		799			△	△	
YFM	660	RN Raptor	01 - 09	592*	△		△	△		592	△		△	△	
YFM	700	FGPW Grizzly Left	07 - 17	850			△	△		852			△	△	
YFM	700	FGPW Grizzly Right	07 - 17	849			△	△		851			△	△	
YFM	700	R Raptor Left	06 - 08	611	△		△	△		816			△	△	
YFM	700	R Raptor Right	06 - 08	638	△		△	△							
YFM	700	Raptor Left	09 - 12	611	△		△	△		816			△	△	
YFM	700	Raptor Right	09 - 12	638	△		△	△							
YFM	700	Raptor Left	13 - 14	611	△		△	△		709	△		△	△	
YFM	700	Raptor Right	13 - 14	638	△		△	△							
YXC	700	Viking VI Left	15 - 16	971			△	△	△	973			△	△	△
YXC	700	Viking VI Right	15 - 16	972			△	△	△	974			△	△	△
YXC	700	Viking VI EPS Left	15 - 21	971			△	△	△	973			△	△	△
YXC	700	Viking VI EPS Right	15 - 21	972			△	△	△	974			△	△	△
YXC	700	Viking VI EPS Special Edition													
		Left	16 - 17	971			△	△	△	973			△	△	△
YXC	700	Viking VI EPS Special Edition													
		Right	16 - 17	972			△	△	△	974			△	△	△
YXE	700	Wolverine Left	16 - 18	971			△	△	△	973			△	△	△
YXE	700	Wolverine Right	16 - 18	972			△	△	△	974			△	△	△
YXE	700	Wolverine EPS Left	17 - 17	971			△	△	△	973			△	△	△
YXE	700	Wolverine EPS Right	17 - 17	972			△	△	△	974			△	△	△
YXE	700	Wolverine R-Spec Left	16 - 16	971			△	△	△	973			△	△	△
YXE	700	Wolverine R-Spec Right	16 - 16	972			△	△	△	974			△	△	△
YXE	700	Wolverine R-Spec EPS Left	16 - 18	971			△	△	△	973			△	△	△
YXE	700	Wolverine R-Spec EPS Right	16 - 18	972			△	△	△	974			△	△	△
YXE	700	Wolverine R-Spec EPS SE Left	16 - 16	971			△	△	△	973			△	△	△
YXE	700	Wolverine R-Spec EPS SE Right	16 - 16	972			△	△	△	974			△	△	△
YXE	700	Wolverine R-Spec EPS Special													
		Edition Left	17 - 17	971			△	△	△	973			△	△	△
YXE	700	Wolverine R-Spec EPS Special													
		Edition Right	17 - 17	972			△	△	△	974			△	△	△
YXM	700	Viking Left	14 - 20	971			△	△	△	973			△	△	△
YXM	700	Viking Right	14 - 20	972			△	△	△	974			△	△	△
YXM	700	Viking EPS Left	14 - 21	971			△	△	△	973			△	△	△
YXM	700	Viking EPS Right	14 - 21	972			△	△	△	974			△	△	△

* = 2 sets required / 2 jeux pour l'Avant.
△ = Available quality / Qualité disponible.
To select compound for off-road front/rear - see page 21-23 / Pour sélectionner vos plaquettes off-road avant/arriére - voir page 21-23.





COMPOUND CHOICE

5xx - 9xx = ATV/UTV Brake Pads
2xxx = Brake Shoes



COMPOUND CHOICE

5xx - 9xx = ATV/UTV Brake Pads
2xxx = Brake Shoes

YAMAHA					HF	ATS	SI	RSI	PSI		HF	ATS	SI	RSI	PSI
YXM	700	Viking EPS SE Left	14 - 17	971			△	△	△	973			△	△	△
YXM	700	Viking EPS SE Right	14 - 17	972			△	△	△	974			△	△	△
YXM	700	Viking EPS Special E Left	19 - 19	971			△	△	△	973			△	△	△
YXM	700	Viking EPS Special E Right	19 - 19	972			△	△	△	974			△	△	△
YXM	700	Viking EPS Special Edition Left	16 - 16	971			△	△	△	973			△	△	△
YXM	700	Viking EPS Special Edition Right	16 - 16	972			△	△	△	974			△	△	△
YXR	700	Rhino Left	08 - 14	638	△		△	△		638	△		△	△	
YXR	700	Rhino Right	08 - 14	611	△		△	△		611	△		△	△	
YXE	850	Wolverine X2 Left	19 - 19	971			△	△	△	973			△	△	△
YXE	850	Wolverine X2 Right	19 - 19	972			△	△	△	974			△	△	△
YXE	850	Wolverine X2 EPS Left	20 - 20	971			△	△	△	973			△	△	△
YXE	850	Wolverine X2 EPS Right	20 - 20	972			△	△	△	974			△	△	△
YXE	850	Wolverine X2 R-Spec Left	19 - 20	971			△	△	△	973			△	△	△
YXE	850	Wolverine X2 R-Spec Right	19 - 20	972			△	△	△	974			△	△	△
YXE	850	Wolverine X2 XTR Left	20 - 20	971			△	△	△	973			△	△	△
YXE	850	Wolverine X2 XTR Right	20 - 20	972			△	△	△	974			△	△	△
YXF	850	Wolverine X4 Left	18 - 20	971			△	△	△	973			△	△	△
YXF	850	Wolverine X4 Right	18 - 20	972			△	△	△	974			△	△	△
YXF	850	Wolverine X4 SE Left	19 - 19	971			△	△	△	973			△	△	△
YXF	850	Wolverine X4 SE Right	19 - 19	972			△	△	△	974			△	△	△
YXF	850	Wolverine X4 Special Left	19 - 19	971			△	△	△	973			△	△	△
YXF	850	Wolverine X4 Special Right	19 - 19	972			△	△	△	974			△	△	△
YXF	850	Wolverine X4 Special Edition Left	18 - 18	971			△	△	△	973			△	△	△
YXF	850	Wolverine X4 Special Edition Right	18 - 18	972			△	△	△	974			△	△	△
YXF	850	Wolverine X4 XTR Left	20 - 20	971			△	△	△	973			△	△	△
YXF	850	Wolverine X4 XTR Right	20 - 20	972			△	△	△	974			△	△	△
	1000	Wolverine RMAX 4	21 - 21	979*			△	△	△	980*			△	△	△
	1000	Wolverine RMAX 4 LE	21 - 21	979*			△	△	△	980*			△	△	△
	1000	Wolverine RMAX 4 SE	21 - 21	979*			△	△	△	980*			△	△	△
YXE	1000		21 - 21	979*			△	△	△	980*			△	△	△
YXZ	1000	EPS	16 - 20	979*			△	△	△	980*			△	△	△
YXZ	1000	EPS SE	17 - 19	979*			△	△	△	980*			△	△	△
YXZ	1000	EPS Special	20 - 20	979*			△	△	△	980*			△	△	△
YXZ	1000	EPS Special Edition	16 - 17	979*			△	△	△	980*			△	△	△
YXZ	1000	EPS SS	17 - 20	979*			△	△	△	980*			△	△	△
YXZ	1000	SS Special	20 - 20	979*			△	△	△	980*			△	△	△
YXZ	1000	SS XTR	20 - 20	979*			△	△	△	980*			△	△	△

* = 2 sets required / 2 jeux pour l'Avant.
△ = Available quality / Qualité disponible.
To select compound for off-road front/rear - see page 21-23 / Pour sélectionner vos plaquettes off-road avant/arriére - voir page 21-23.

NEW! Get the brake feel you want!

sbs
GO AHEAD

Find the right brake pad compound for you and your bike with the new Compound Selector at sbsbrakes.com

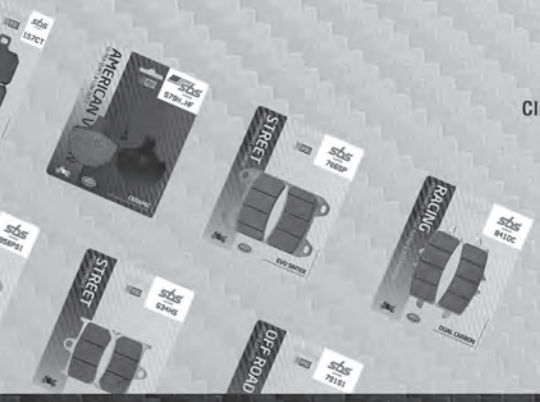

Find the right compound for you and your bike

Click Start Now, answer 2-3 questions and get the answer right away

START NOW





@sbsbrakes | sbsbrakes.com

HI-TECH BRAKE SOLUTIONS
MADE IN EUROPE


Allan Østli
Racing Manager SBS
Winner Ducati Challenge
sbs
GO AHEAD
I KNOW
WHAT YOU
WANT!
ROAD RACING
@sbsbrakes | sbsbrakes.com | #GoAhead
HI-TECH BRAKE SOLUTIONS
MADE IN EUROPE

				COMPOUND CHOICE					COMPOUND CHOICE		
APRILIA					**DS-1**	**DS-2**	**DC**	**RST**		**RQ**	**LS**
RS	660		20 - 21	900*	△	△	△	△	730	△	△
RSV4	1000	, ABS	09 - 13	841*	△	△	△	△	730	△	△
RSV4-R	1000	, ABS APRC	10 - 10	841*	△	△	△	△	730	△	△
RSV4-RF	1000		15 - 20	901*	△	△	△	△	730	△	△
RSV4-RR	1000		15 - 20	901*	△	△	△	△	730	△	△
BIMOTA											
BB3	1000		14 - 18	901*	△	△	△	△	730	△	△
DB5	1000	Mille	05 - 11	762*	△		△	△	730	△	△
DB5	1000	S	07 - 11	762*	△		△	△	730	△	△
DB7	1098		08 - 08	762*	△		△	△	730	△	△
DB7	1099		09 - 09	901*	△	△	△	△	519	△	△
3D	1100	Tesi	07 - 11	762*	△		△	△	730	△	△
DB8	1198		10 - 14	901*	△	△	△	△	730	△	△
BMW											
M	1000	RR	21 - 21	985*	△	△	△	△	984	△	△
S	1000	RR	09 - 18	870*	△	△	△	△	675	△	△
S	1000	RR	19 - 21	960*	△	△	△	△	675	△	△
S	1000	RR HP4	12 - 14	901*	△	△	△	△	675	△	△
	1200	HP2 Sport	08 - 10	901*	△	△	△	△	671	△	△
DUCATI											
	848		08 - 10	706*	△	△	△	△	730	△	△
	848	EVO	11 - 12	841*	△	△	△	△	730	△	△
	899	Panigale	14 - 15	900*	△	△	△	△	730	△	△
	955	Panigale V2	20 - 21	900*	△	△	△	△	730	△	△
	959	Panigale	16 - 20	900*	△	△	△	△	730	△	△
	959	Panigale Corse	18 - 20	900*	△	△	△	△	730	△	△
	998	Panigale V4 R	19 - 20	841*	△	△	△	△	730	△	△
	1098	R	08 - 10	841*	△	△	△	△	730	△	△
	1098	R Bayliss LE	09 - 10	841*	△	△	△	△	730	△	△
	1100	Panigale V4	18 - 20	841*	△	△	△	△	730	△	△
	1100	Panigale V4 S	18 - 20	841*	△	△	△	△	730	△	△
	1100	Panigale V4 S Corse	19 - 19	841*	△	△	△	△	730	△	△
	1100	Panigale V4 Speciale	18 - 19	841*	△	△	△	△	730	△	△
	1198		09 - 13	841*	△	△	△	△	730	△	△
	1198	S	09 - 12	841*	△	△	△	△	730	△	△
	1198	SP	11 - 12	841*	△	△	△	△	730	△	△
	1199	Panigale	12 - 14	841*	△	△	△	△	730	△	△
	1199	Panigale R	13 - 15	841*	△	△	△	△	730	△	△
	1199	Panigale S	12 - 14	841*	△	△	△	△	730	△	△
	1199	Superleggera	14 - 14	841*	△	△	△	△	730	△	△
	1299	Panigale	15 - 17	841*	△	△	△	△	730	△	△
	1299	Panigale R	15 - 17	841*	△	△	△	△	730	△	△
	1299	Panigale R Final Edition	17 - 20	841*	△	△	△	△	730	△	△
	1299	Panigale S	15 - 17	841*	△	△	△	△	730	△	△
	1299	Panigale S Anniversario	17 - 17	841*	△	△	△	△	730	△	△
	1299	Superleggera	17 - 17	841*	△	△	△	△	730	△	△
EBR											
	1190	RS	12 - 15	856	△			△	857		△
HARLEY DAVIDSON											
XR	1200		08 - 10	860*	△			△	808		△
HONDA											
CBR	250	R (Nissin cal)	11 - 13	627			△	△	881	△	△
CBR	250	RR	17 - 21	700	△	△	△	△	881	△	△
CBR	500	R	13 - 21	700	△	△	△	△	881	△	△
CBR	600	RR ABS	09 - 18	809*	△	△	△	△	834	△	△
CBR	650	F	14 - 20	700*	△	△	△	△	881	△	△
CBR	650	F ABS	14 - 20	700*	△	△	△	△	881	△	△
CBR	1000	RR Fireblade	09 - 16	809*	△	△	△	△	834	△	△
CBR	1000	RR Fireblade	17 - 19	947*	△	△	△	△	834	△	△
CBR	1000	RR-R Fireblade	20 - 21	985*	△	△	△	△	730	△	△
CBR	1000	RR-R SP Fireblade	20 - 21	901*	△	△	△	△	730	△	△
CBR	1000	RR SP	14 - 19	901*	△	△	△	△	834	△	△

* = 2 sets required / 2 jeux pour l'Avant.
△ = Available quality / Qualité disponible.
To select compound for racing front/rear - see page 17-20 / Pour sélectionner vos plaquettes racing avant/arriére - voir page 17-20.

				COMPOUND CHOICE						COMPOUND CHOICE		
HONDA					**DS-1**	**DS-2**	**DC**	**RST**			**RQ**	**LS**
CBR	1000	RR SP2	17 - 19	901*	△	△	△	△		834	△	△
RC213V-S	1000		16 - 18	901*	△	△	△	△		730	△	△
KAWASAKI												
EX	250	R Ninja	18 - 20	955	△	△	△	△		638	△	△
ZX-25R	250		20 - 20	806	△	△	△	△		657	△	△
EX	300	R Ninja, ABS	13 - 17	638	△		△	△		638	△	△
EX	400	Ninja	18 - 20	955	△	△	△	△		638	△	△
ZX-6R	600	Ninja	07 - 17	838*	△	△	△	△		687	△	△
ZX-6RR	600	Ninja	03 - 06	788*	△		△	△		687	△	△
ZX-6R	636	Ninja	13 - 18	894*			△	△		834	△	△
ZX-6R	636	Ninja ABS	13 - 21	894*			△	△		834	△	△
ZX-6R	636	Ninja KRT ABS	13 - 18	894*			△	△		834	△	△
ZX	1000	H2 Carbon Ninja	17 - 20	841*	△	△	△	△		730	△	△
ZX	1000	H2 Ninja	15 - 21	841*	△	△	△	△		730	△	△
ZX	1000	H2R Ninja	15 - 20	841*	△	△	△	△		730	△	△
ZX-10R	1000	Ninja	08 - 10	806*	△		△	△		687	△	△
ZX-10R	1000	Ninja	11 - 15	806*	△		△	△		834	△	△
ZX-10R	1000	Ninja	16 - 20	841*	△	△	△	△		834	△	△
ZX-10R	1000	Ninja ABS	12 - 15	806*	△	△	△	△		834	△	△
ZX-10R	1000	Ninja KRT	16 - 18	841*	△	△	△	△		834	△	△
ZX-10R	1000	Ninja SE	18 - 20	841*	△	△	△	△		834	△	△
ZX-10RR	1000	Ninja	17 - 20	841*	△	△	△	△		834	△	△
KTM												
RC	250		14 - 15	877			△	△		675	△	△
RC	250	Upgrade DS	14 - 15	634	△	△	△	△		675	△	△
RC	390		14 - 20	877			△	△		675	△	△
RC	390	Upgrade DS	14 - 20	634	△	△	△	△		675	△	△
	690	Duke R	14 - 17	841*	△	△	△	△		675	△	△
RC8	1190		08 - 11	841*	△	△	△	△		730	△	△
RC8	1190	R	09 - 15	841*	△	△	△	△		730	△	△
RC8	1190	R Track	11 - 15	841*	△	△	△	△		730	△	△
MORIWAKI												
MD	250		09 - 09	782			△	△		618	△	
MV AGUSTA												
	675	F3	11 - 12	706*	△	△	△	△		763	△	△
	675	F3	13 - 14	706*	△	△	△	△		730	△	△
	675	F3	15 - 20	901*	△	△	△	△		730	△	△
	675	F3 RC	16 - 20	901*	△	△	△	△		730	△	△
	800	F3	14 - 20	901*	△	△	△	△		763	△	△
	800	F3 RC	16 - 20	901*	△	△	△	△		730	△	△
	1000	F4 LH44	18 - 20	841*	△	△	△	△		763	△	△
	1000	F4 R	12 - 19	841*	△	△	△	△		763	△	△
	1000	F4 RC	15 - 20	841*	△	△	△	△		763	△	△
	1000	F4 RR	12 - 20	841*	△	△	△	△		763	△	△
	1078	F4 CC	08 - 11	841*	△	△	△	△		763	△	△
	1078	F4 RR	08 - 11	841*	△	△	△	△		763	△	△
OHVALE												
GP-01	110		17 - 19	885				△		872	△	
GP-01	160		17 - 19	885				△		872	△	
GP-01	190		17 - 19	885				△		872	△	
GP-01	212		17 - 19	872				△		872	△	
SUZUKI												
GSX-R	600		06 - 10	806*	△	△	△	△		833	△	△
GSX-R	600		11 - 21	841*	△	△	△	△		834	△	△
SV	650	,S ABS	15 - 18	705				△		657	△	△
GSX-R	750		06 - 10	806*	△	△	△	△		833	△	△
GSX-R	750		11 - 18	841*	△	△	△	△		834	△	△
GSX-R	1000		09 - 11	806*	△	△	△	△		834	△	△
GSX-R	1000		12 - 21	841*	△	△	△	△		834	△	△
GSX-R	1000	R	17 - 21	841*	△	△	△	△		834	△	△

* = 2 sets required / 2 jeux pour l'Avant.
△ = Available quality / Qualité disponible.
To select compound for racing front/rear - see page 17-20 / Pour sélectionner vos plaquettes racing avant/arriére - voir page 17-20.



				COMPOUND CHOICE					COMPOUND CHOICE	
TRIUMPH				DS-1	DS-2	DC	RST		RQ	LS
	675 Daytona R Triple	11 - 12	901*	△	△	△	△	614	△	△
	675 Daytona R Triple	13 - 18	901*	△	△	△	△	675	△	△
	675 Daytona Triple	09 - 12	864*			△	△	614	△	△
	675 Daytona Triple	13 - 18	864*			△	△	675	△	△
	765 Daytona Moto2	20 - 20	901*	△	△	△	△	675	△	△
YAMAHA										
YZF	321 R3	15 - 21	931	△	△	△	△	932	△	
YZF	600 R6	05 - 16	634*	△	△	△	△	657	△	△
YZF	600 R6	17 - 20	634*	△	△	△	△	834	△	△
YZF	600 R6 Quick change / Front wheel	17 - 20	966*	△	△			834	△	△
YZF	1000 R1	15 - 21	634*	△	△	△	△	834	△	△
YZF	1000 R1(4-pad)	07 - 14	839*	△		△	△	657	△	△
YZF	1000 R1(4-pad) ABS	12 - 14	839*	△		△	△	657	△	△
YZF	1000 R1M	15 - 21	634*	△	△	△	△	834	△	△
YZF	1000 R1S	16 - 16	634*	△	△	△	△	834	△	△

* = 2 sets required / 2 jeux pour l'Avant.
△ = Available quality / Qualité disponible.
To select compound for racing front/rear - see page 17-20 / Pour sélectionner vos plaquettes racing avant/arriére - voir page 17-20.

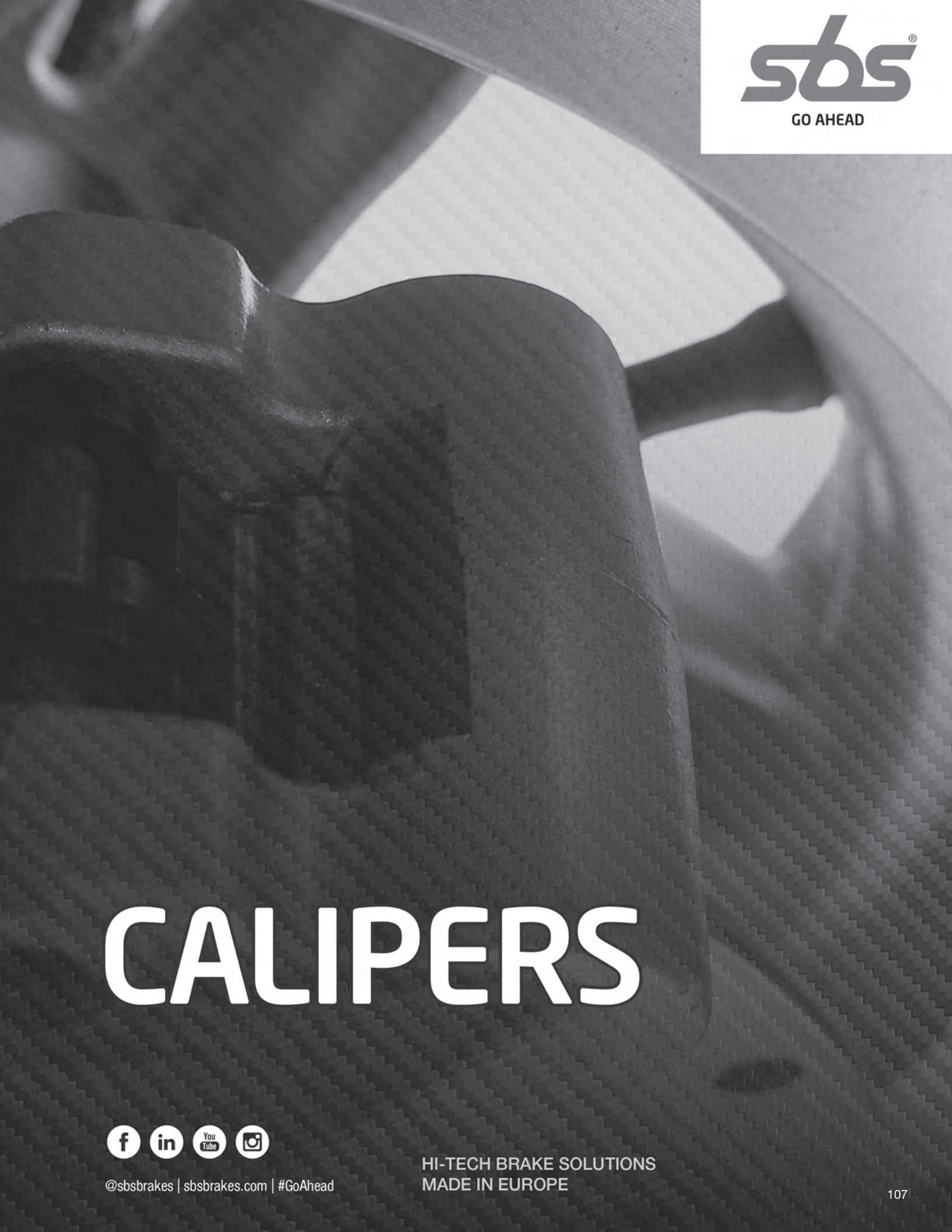
sbs
GO AHEAD
CALIPERS
@sbsbrakes | sbsbrakes.com | #GoAhead
HI-TECH BRAKE SOLUTIONS
MADE IN EUROPE




ACCOSSATO	
AGPZ01, 108 mm CNC Monoblock, 4 Piston/4 Pad	805
AGPZ02, 108 mm Forged Monoblock, 4 Piston/4 Pad	805
AGPZ03, 108 mm Forged Monoblock, 4 Piston/4 Pad	805
AGPZ04, 108 mm Forged Monoblock, 4 Piston/4 Pad	805
AGPZ05, 100 mm CNC Monoblock, 4 Piston/2 Pad	845
AGPZ06, 60 mm CNC Moto 3, 2 Piston/2 Pad	805
AGPZ07, 100 mm Forged Monoblock, 4 Piston/2 Pad	845

A.P. RACING CALIPERS	
6 Piston 3366/3367 Series	660
6 Piston 4466/4477 Series	707
CP-2696-36E0/38E0	523
CP-2868-8E0/9E0	698
CP-3369-2E0/3E0	599
CP-3385-2E0/3E0	599
CP-3386-2E0/3E0	599
CP-3485-8S0/9S0	661
CP-3548	718
CP-3569-2S0/3S0	599
CP-3569-4S0/5S0	661
CP-3586-4S0/5S0	661
CP-3696-2E0	523
CP-3697-2E0	523
CP-3769-2S0/3S0	599
CP-4226-2S0/3S0	719
CP-4484-2S0/3S0	720
CP-4488 Two Pad Radial 4 Piston Monoblock	785
CP-4638-2E0	523
CP-6688 Four Pad Radial 4 Piston Monoblock	805

BERINGER	
2 Piston Classic Billet Caliper	506
4 Piston Caliper	631
6 Piston Caliper	771
6 Piston Endurance Caliper	779

BRAKING	
Front Cross	694
Front Harley Davidson	676
Rear cross (1 piston)	777
Rear cross (2 piston)	604
Street, Supermotard	706

BREMBO RACING CALIPERS	
100 mm Motard Radial XA78910, P4 30/34	706
100 mm Radial 220A16810, P4 30/34	706
100 mm Radial 220A80310, P4 30/34	706
100 mm Radial Caliper .484, 220B47310, P4 32	841
100 mm Radial GP4 RX 220B01020 P4 32 (disc min. Th. 4,0 mm)	901
100 mm Radial GP4 RX 220B01020 P4 32 (disc min. Th. 4,5 mm)	841
100 mm Radial Monoblock 220988530, P4 34	841
100 mm Radial Monoblock XA7G210/11, P4 32/36	711
100 mm Radial Monoblock XA7G240/41, P4 32/36	711
108 mm Motard Radial XA69510, P4 30/34	706
108 mm Radial 220A01610, P4 30/34	706
108 mm Radial 220A80210, P4 30/34	706
108 mm Radial Caliper .484, 220B47310, P4 32	841
108 mm Radial GP4 RX 220B01020 P4 32 (disc min. Th. 4,0 mm)	901
108 mm Radial GP4 RX 220B01020 P4 32 (disc min. Th. 4,5 mm)	841
108 mm Radial Monoblock 220A39710, P4 34	841
108N, P2 38	506
130 mm Radial GP4 RX 220B01020 P4 32 (disc min. Th. 4,0 mm)	901
130 mm Radial GP4 RX 220B01020 P4 32 (disc min. Th. 4,5 mm)	841
Billet 20.4756.52/62, racing	566
Billet P2.24 X20.60.01, racing	732
F08	506
Floating Motocross Caliper 22.5930.62	671
Goldline 20.5161.42/51, road	519




BREMBO RACING CALIPERS	
Goldline 20.6951.50, road	730
Goldline 4 pad 20.7850.11/21, road	762
Goldline single pin 20.5165.55/65, road	566
Goldline two pin 20.6800, road	706
GP X10.48.13/14, racing	695
Monoblock X101740/41, P4 32/36	711
Motard Axial XA32950, P4 34	762
Moto3/SBK XA88810/11, P2 34	887
Moto3/SBK XA88820/21, P2 34	887
Motocross Caliper 22.2180.20	675
Off Road 122A99021, P2 24	671
Off Road XQ21361, P2 28	671
Off Road XQ21390, PF 26	791
Racing rear X206001, P2 24	759
Racing rear X206101, P4 24 (24 mm disc height)	942
Racing rear X206101, P4 24 (30 mm disc height)	941
Racing rear X206121, P4 24 (24 mm disc height)	942
Racing rear X206121, P4 24 (30 mm disc height)	941
Racing rear X988870, P2 34 (24 mm disc height)	942
Racing rear X988870, P2 34 (30 mm disc height)	941
Racing rear XA1J040, P2 30 (24 mm disc height)	942
Racing rear XA1J040, P2 30 (30 mm disc height)	941
Radial 220A16820, P4 30/34	706
Radial GP4 RX 220B01010	841
Radial Monoblock X973760/61, P4 32/36	711
Radial Monoblock X99C460/61, P4 34	805
Radial Monoblock XA8Y310/11	845
Radial Monoblock XA93310/11	711
Radial XA3B830/31, P4 32/36	711
Radial XA3B860/61, P4 32/36	711
SBK Racing DX XB0.B1.31, P4 30/34	889
SBK Racing DX XB0.B1.31, P4 30/34 (for Radiators X93.12.50)	909
SBK Racing SX XB0.B1.30, P4 30/34	889
SBK Racing SX XB0.B1.30, P4 30/34 (for Radiators X93.12.50)	909
Supersport 120A44110, P2 34	730

GMA	
2 Piston Caliper, large Model A	512
2 Piston Caliper, small Model B	560
4 Piston front Model F	559

HARRISON/BILLET CALIPERS	
4 Piston Billet	737
Big-6	737
Mini-6	656

HEL	
HEL 4 Piston Billet Caliper	809

HHI	
4 Piston Caliper	678
6 Piston Caliper	676

ISR CALIPERS	
2 Piston (22-023/026)	504
2 Piston (22-027/028/029)	519
2 Piston (22-030/033)	523
2 Piston (22-036)	655
4 Piston (22-025)	519
4 Piston (22-043)	655
6 Piston Racing Caliper, large	656
6 Piston Racing Caliper, small	655

J.JUAN	
Big Brake Kit X3	959
Fixed 2p radial caliper 82mm	962

* = 2 sets required / 2 jeux pour l'Avant.
Compound selection, see under "Brake pad drawings" / Sélection de composés, voir sous les schémas des plaquettes de frein.






JAYBRAKE	
2 Piston Caliper ADC/ADCS	560
2 Piston Dual Series Caliper	559
4 Piston Caliper A4 P/L	686
4 Piston J-Four Caliper	686
4 Piston Quad Series Caliper	559
MOTO-MASTER	
Supermoto Racing Caliper	631
MOTOR FACTORY	
4 Piston Caliper front/rear	678
NISSIN	
3 Piston Racing Rear Caliper	766
4 Piston Caliper	624
4 Piston Racing Caliper (1)	711
4 Piston Racing Caliper (2)	825
4 Piston Racing Caliper (510-C00-91N/510-C10-91N)	950
6 Piston Racing Caliper	729
6 Piston Racing Radial Monobloc Caliper (Z0901)	865
PERFORMANCE MACHINE	
112 X 6B	729
112 X 6QC	729
112 X 6RSB	683
112 X 6SSB	683
124 X 4HR	662
125 X 2	559
125 X 4R	678
125 X 4RSPH	678
125 X 4S	559
125 X 4SL	559
125 X 6	658
125 X 6QC	683
137 X 4	662
137 X 4B	678
137 X 6	658
162 X 2	509
4 Piston Vintage Caliper	678
PFM	
6 Piston Racing Caliper	707
PVM	
4 Pad Caliper	805
REVTECH	
Wilwood Caliper front/rear	566
SJP	
2 Piston Caliper (30-375)	559
4 Piston Caliper (30-370)	559

* = 2 sets required / 2 jeux pour l'Avant.
Compound selection, see under "Brake pad drawings" / Sélection de composés, voir sous les schémas des plaquettes de frein.

ALMOST ANY BIKE

BRAKE PADS, CLUTCH KITS AND BRAKE ROTORS

Find the right part with the PRODUCT SELECTOR at SBSBRAKES.COM

sbs

GO AHEAD

HI-TECH BRAKE SOLUTIONS
MADE IN EUROPE



Choose your model

Select the fields in any order

Type | Brand* | CCM* | Model* | Year*

SHOW MATCHES >

NEW SEARCH



FOR TIPS & NEWS - #sbsbrakes | sbsbrakes.com

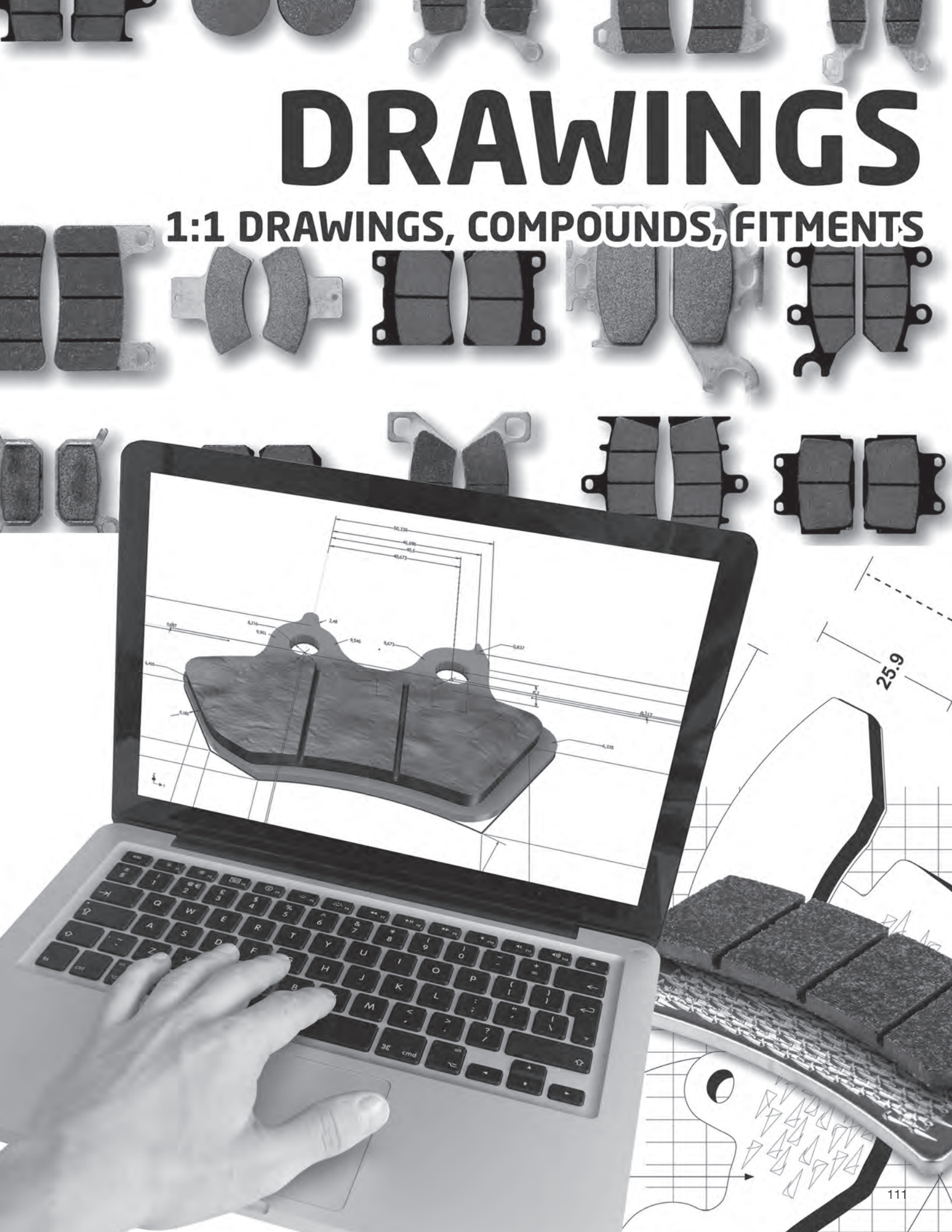
DRAWINGS
1:1 DRAWINGS, COMPOUNDS, FITMENTS
25.9

SBS 100 Recommended compound

HONDA					
CB	50	all models	80 - 81	**HF**	
MB	50	S	80 - 82	**HF**	
MBX	50		80 - 82	**HF**	
CB	80		80 - 81	**HF**	
PEUGEOT					
	50	Vivacity	08 - 14	**HF**	
SACHS					
	50	MadAss 4T	05 - 09		**HF**
	125	MadAss	09 - 09		**HF**

SBS 101 Recommended compound

APRILIA					
RS-4	50		12 - 19		**HF**
RS-4	50	Replica	16 - 17		**HF**
SX	50	Ltd.	07 - 15		**CT**
BENELLI					
	350	Zenzero	12 - 15		**CT**
CPI					
	50	Baby	02 - 02	**HF**	
	50	Hussar	01 - 02	**HF**	
	50	Mars	01 - 02	**HF**	
	50	Popcorn	01 - 02	**HF**	
HYOSUNG					
	50	Avanti	99 - 02	**HF**	
	50	Rush	97 - 01	**HF**	
	50	Sense	98 - 07	**HF**	
	50	Super Cab	95 - 98	**HF**	
	50	Super Cab Plus	98 - 98	**HF**	
SB	50		00 - 03	**HF**	
SB	50	P	00 - 03	**HF**	
SD	50		00 - 06	**HF**	
SF	50		99 - 06	**HF**	
	100	Cab	98 - 01	**HF**	
EZ	100		00 - 05	**HF**	
	110	Midas Plus	98 - 04	**HF**	
FX	110	110	02 - 04	**HF**	
KR	110	Master	04 - 05	**HF**	

ITALJET					
	100	Millennium 2T	01 - 01	**HF**	
	125	Millennium	00 - 03	**CT**	
	150	Millennium	00 - 03	**CT**	
KEEWAY					
	50	Flash	07 - 12	**HF**	
	50	Hurricane	06 - 16	**HF**	
	90	Hurricane	06 - 09	**HF**	
SUZUKI					
AH	50	Adress	92 - 95	**HF**	
ZZ	50	Scooter	92 - 92	**HF**	
AH	80	Adress, V, Tune	88 - 91	**HF**	
AH	100	V Adress	91 - 94	**HF**	
UE	125		01 - 03	**CT**	
UE	150	CT	02 - 03	**CT**	
TGB					
	50	101R	05 - 09	**HF**	
	50	101S	99 - 02	**HF**	
	50	202T	99 - 02	**HF**	
	50	303R	99 - 14	**HF**	
	50	309 Racing	05 - 05	**HF**	
	50	507	05 - 05	**HF**	
	50	Akros	99 - 04	**HF**	
	50	Bull&t RS/RR	11 - 17		**HF**
	50	Bullet	09 - 09	**HF**	**HF**
	50	Bunny	97 - 00	**HF**	
	50	Double X	05 - 05	**HF**	

TGB					
	50	Ergon	96 - 00	**HF**	
	50	Hawk	09 - 14	**HF**	
	50	Hiw's	99 - 99	**HF**	
	50	Hook	10 - 12	**HF**	
	50	J409	00 - 03	**HF**	
	50	Tapo RS	11 - 12	**HF**	
	50	Trigger	99 - 03	**HF**	
R	50	X	06 - 14		**HF**
	90	101S	99 - 02	**HF**	
	90	202T	99 - 02	**HF**	
	90	Akros	99 - 99	**HF**	
	90	Ergon	99 - 02	**HF**	
	90	Hiw's	99 - 99	**HF**	
	90	Trigger	99 - 02	**HF**	
	125	101S	99 - 03	**CT**	
	125	202T	99 - 99	**CT**	
	125	303R	99 - 08	**CT**	
	125	309 RS	00 - 00	**HF**	
	125	Bull&t RS/RR	11 - 14		**HF**
	125	Hook	10 - 10	**HF**	

Available compounds **HF • CT** **SBS 100**

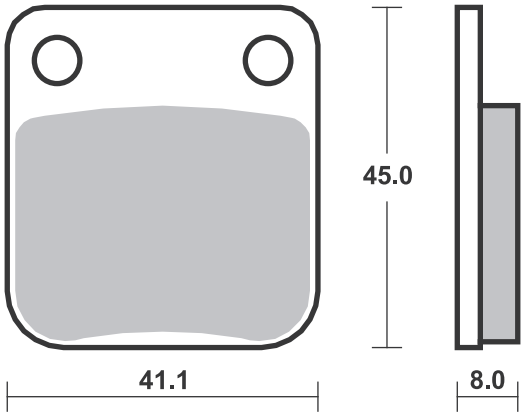

Available compounds **HF • CT • MS** **SBS 101**

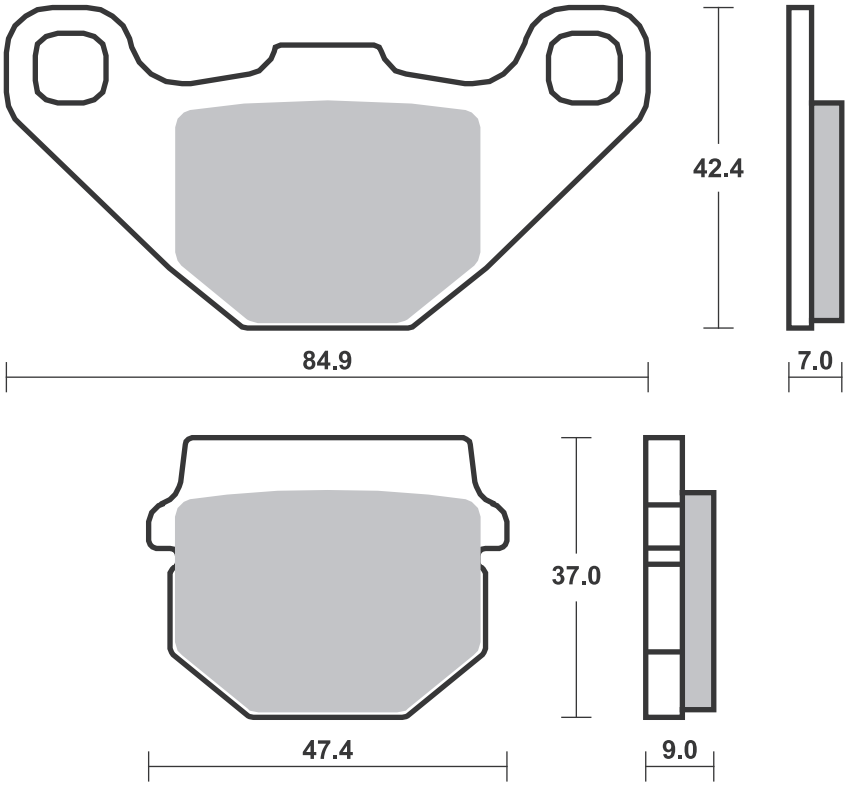

Dimensions in mm / Dimensions en mm • 1” = 25.4 mm , 1 mm = 0.04”

SBS 102 Recommended compound

					
ADLY					
	50	Panther	01 - 09	**HF**	
	50	Silver Fox	06 - 09	**HF**	
	50	Super Sonic	00 - 05	**HF**	
	50	Thunderbike	97 - 09	**HF**	
RS	50	Super Sonic	06 - 08	**HF**	**HF**
	100	Panther	01 - 06	**HF**	
	100	Silver Fox	06 - 06	**HF**	
	100	Super Sonic	01 - 05	**HF**	
	100	Thunderbike	01 - 04	**HF**	**HF**
	125	Super Sonic	01 - 05	**CT**	
	125	Thunderbike	01 - 04	**CT**	**CT**
MALAGUTI					
	125	Monte	20 - 20		**CT**
PEUGEOT					
	50	Speedake (Hengtong cal.)	94 - 01	**HF**	
	50	Speedfight LC, (Hengtong cal.)	96 - 15	**HF**	
	50	Trekker Offroad	99 - 01	**HF**	
	50	Vivacity (Hengtong cal.)	05 - 07	**HF**	
	100	Vivacity (Hengtong cal.)	05 - 07	**HF**	
SUZUKI					
AH	80	Scooter	92 - 94	**HF**	

SBS 103 Recommended compound

					
CAGIVA					
	125	Stella	97 - 08	**CT**	
HONDA					
NS-1	50		91 - 94	**HF**	
NSR	50		89 - 90	**HF**	
NSR	80	R	87 - 92	**HF**	
HYOSUNG					
	125	Boomer	03 - 03		**CT**
	125	Exceed	02 - 06		**CT**
	150	Exceed	02 - 04		**CT**
SYM					
	125	Wolf Legend	02 - 05	**CT**	

Available compounds **HF • CT** **SBS 102**

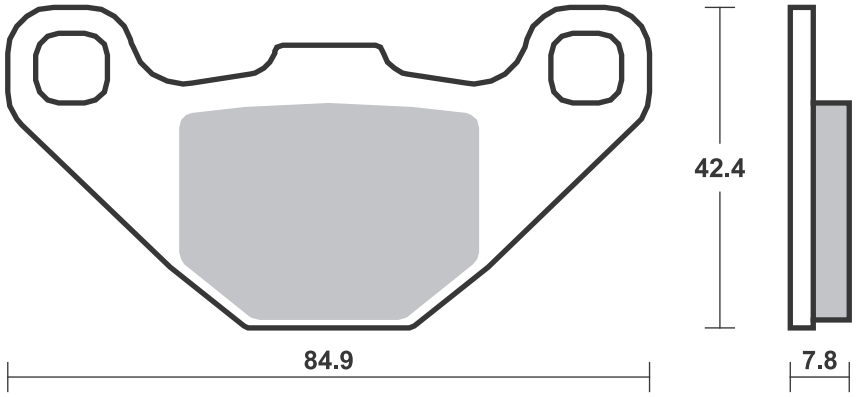

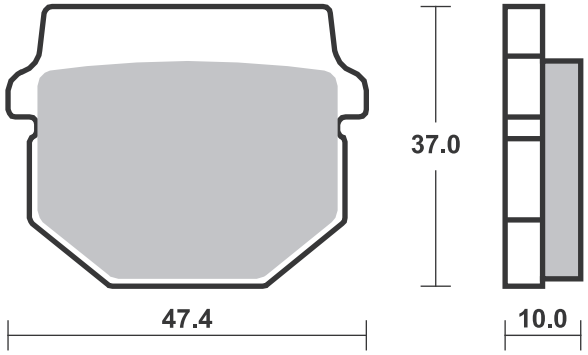

Available compounds **HF • CT** **SBS 103**

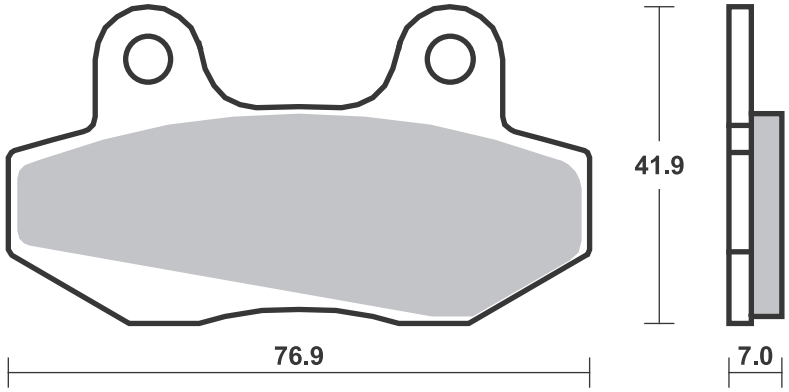

SBS 104 Recommended compound

HONDA					
	100	Lead	00 - 08	**HF**	
NHX	110		10 - 12	**CT**	
NES	125	@	01 - 06	**CT**	
NES	150	@	01 - 06	**CT**	

SBS 105 Recommended compound

CPI					
	50	Supermoto, Supercross	03 - 09	**HF**	**HF**
DERBI					
	50	Atlantis	99 - 08	**HF**	
	50	Atlantis 4T	04 - 10	**HF**	
	50	Atlantis Bullet	04 - 05	**HF**	
	50	Atlantis H2O	01 - 01	**HF**	
	50	Atlantis H2O Wave	01 - 01	**HF**	
	50	Atlantis Wave	01 - 02	**HF**	
	50	Aventura	96 - 96	**HF**	
	50	Black Devil	04 - 04		**HF**
	50	DRD Pro corse	06 - 08		**HF**
	50	DRD Racing R	05 - 10		**HF**
	50	DRD Racing R Ltd.	05 - 05		**HF**
	50	DRD Racing SM	05 - 05		**HF**
	50	DRD Racing SM Ltd.	05 - 05	**HF**	
	50	Fenix	94 - 07	**HF**	**HF**
	50	Furax	96 - 98	**HF**	**HF**
	50	Hunter	97 - 99	**HF**	
	50	Manhattan	99 - 99	**HF**	
	50	Predator LC	99 - 02	**HF**	**HF**
	50	Predator O2	00 - 02	**HF**	**HF**
	50	Rambla	06 - 06	**HF**	**HF**
	50	Savannah	91 - 97	**HF**	
	50	Senda L	99 - 01	**HF**	**HF**
	50	Senda R DRD	03 - 04		**HF**
	50	Senda R, X-Treme	94 - 04	**HF**	**HF**
	50	Senda SM DRD	03 - 04	**HF**	**HF**
	50	Senda SM DRD Black Edition	03 - 04		**HF**
	50	Senda SM, X-Treme	99 - 06	**HF**	**HF**
	50	Stinger	96 - 96	**HF**	
	50	Vamos FL	95 - 99	**HF**	
	50	Vamos L	95 - 95	**HF**	
	50	Vamos R (A.J.P. cal.)	95 - 95	**HF**	
DERBI					
	50	Variant Sport-R	01 - 13	**HF**	
	50	X-Race R	05 - 09	**HF**	**HF**
	50	X-Treme R	05 - 05	**HF**	**HF**
GP	50		01 - 01	**HF**	
GP1	50		01 - 03	**HF**	**HF**
GPR	50	R	98 - 03		**HF**
GPX1	50		06 - 06		**HF**
ST	50	Paddock	96 - 99	**HF**	
	100	Atlantis 4T	04 - 06	**HF**	
	100	Atlantis O2/H2O	01 - 01	**HF**	
	125	Predator	99 - 99	**CT**	
HUSQVARNA					
	50	Racing	98 - 98	**HF**	
SM	50		02 - 02		**HF**
ITALJET					
	50	Dragster	99 - 06	**HF**	**HF**
	50	Formula Air	99 - 00	**HF**	
	50	Formula L.C.	98 - 00	**HF**	**HF**
	50	Torpedo	98 - 99	**HF**	
	50	Torpedo 4T	01 - 03	**HF**	
	125	Dragster	99 - 03	**CT**	**CT**
	125	Formula L.C.	99 - 03	**CT**	**CT**
	125	Jupiter	02 - 03		**CT**
	125	Torpedo	99 - 06	**CT**	
	125	Twin	98 - 01	**CT**	**CT**
	150	Jupiter	02 - 03		**CT**
	150	Torpedo 4T	01 - 01	**CT**	
	180	Dragster	99 - 03	**CT**	**CT**
PEUGEOT					
	50	Elyseo	02 - 05	**HF**	**HF**
	50	Elyseo (A.J.P. cal.)	99 - 01	**HF**	
	50	Elystar	03 - 05	**HF**	
	50	Looxor	02 - 05	**HF**	
	50	Looxor	06 - 06	**HF**	**HF**
	50	Speedake (A.J.P. cal)	94 - 01	**HF**	
	50	Speedfight 2 A/C	01 - 08	**HF**	
	50	Speedfight 2 L/C	01 - 08	**HF**	**HF**
PEUGEOT					
	50	Speedfight 2 X-Race, Furious, 206 WRC	01 - 02	**HF**	**HF**
	50	Speedfight LBD/LBDP	00 - 00	**HF**	**HF**
	50	Speedfight LC, (A.J.P. cal.)	96 - 15	**HF**	
	50	Speedfight Lemans	11 - 11	**HF**	**HF**
	50	Trekker Metal-X	01 - 08	**HF**	
	50	Trekker Road	99 - 00	**HF**	
	50	Trekker Streetboard	00 - 02	**HF**	
	50	Trekker Urban Black	00 - 00	**HF**	
	50	Vivacity (A.J.P. cal.)	99 - 07	**HF**	
	100	Elyseo	02 - 05	**HF**	**HF**
	100	Elyseo (A.J.P. cal.)	99 - 01	**HF**	
	100	Looxor	02 - 07	**HF**	**HF**
	100	Speedfight	00 - 07	**HF**	**HF**
	100	Speedfight 2, X-Race	01 - 07	**HF**	**HF**
	100	Trekker Road	99 - 04	**HF**	
	100	Vivacity (A.J.P. cal.)	99 - 07	**HF**	
	125	Elyseo (A.J.P. cal.)	99 - 99	**CT**	
TOMOS					
	50	Hip Hop	06 - 08	**HF**	
	50	Racing	06 - 08	**HF**	
	50	Street Soul	06 - 08	**HF**	
	50	Youngst'r	06 - 08	**HF**	
SE	50		05 - 06		**HF**
YAMAHA					
TZR	50		03 - 04		**HF**

Available compounds **HF • CT • MS** **SBS 104**

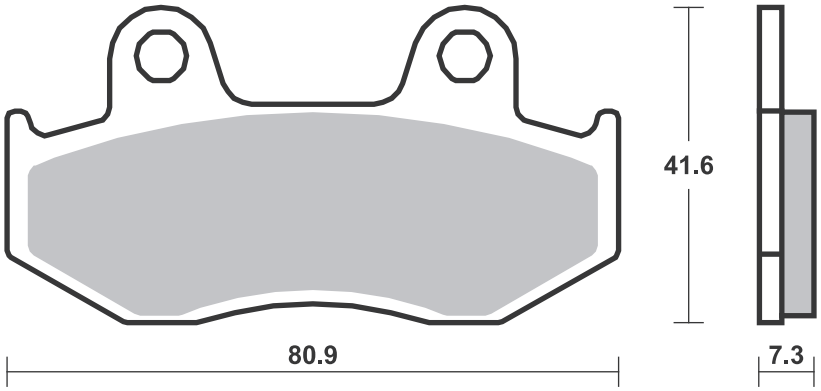

Available compounds **HF • CT** **SBS 105**

If required with springs - see SBS 188

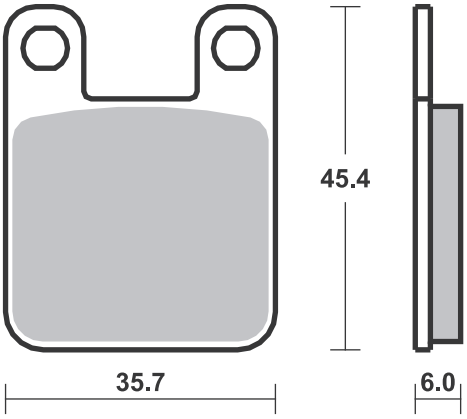

SBS 107 Recommended compound

YAMAHA					
DT	50	R	89 - 97	**HF**	
TDR	50		90 - 92	**HF**	**HF**
TZM	50	R	94 - 97		**HF**
TZR	50		90 - 92		**HF**
XC	125	Cygnus F	00 - 08	**CT**	
XC	125	F	00 - 08	**CT**	
XC	125	TR Cygnus, R	96 - 98	**CT**	
XC	150	Fly One R	98 - 02	**CT**	

SBS 108 Recommended compound

APRILIA				
	200	Sportcity	04 - 08	**CT**
DERBI				
	125	Rambla	08 - 14	**CT**
	300	Rambla	08 - 12	**MS**
MALAGUTI				
	125	Runner	87 - 87	**CT**

Available compounds **HF • CT** **SBS 107**

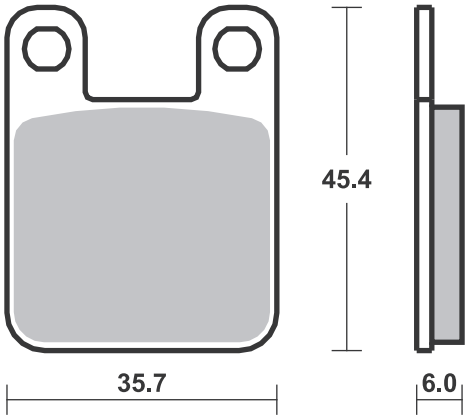

Available compounds **HF • CT • MS** **SBS 108**

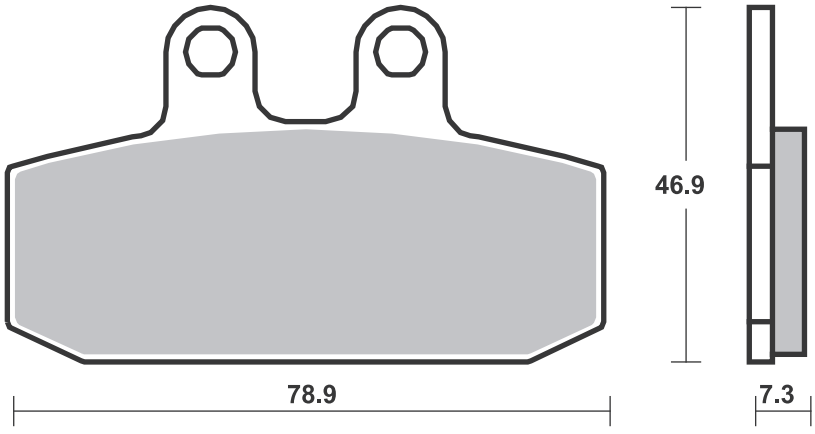

SBS 109 Recommended compound

MALAGUTI					
	50	Centro	93 - 96	**HF**	
F-15	50	Fire Fox L.C.	96 - 08	**HF**	

SBS 110 Recommended compound

HONDA					
NH	50	Lead	86 - 93	**HF**	
SYM					
	50	Bullet	93 - 93	**HF**	
	50	Cinderella	01 - 00	**HF**	
	50	Mio	05 - 16	**HF**	
DD	50		02 - 12	**HF**	
	100	Cinderella	01 - 01	**HF**	
	100	Mio	05 - 16	**HF**	

SBS 111 Recommended compound

ADLY					
	25	Silver Fox	00 - 05	**HF**	
	50	Cat	01 - 08	**HF**	
	50	Cosy	01 - 08	**HF**	
	50	Fox	00 - 09	**HF**	
	50	Fox Plus	01 - 09	**HF**	
	50	Jet	96 - 99	**HF**	
	50	Pista, Pista Twin Light	96 - 99	**HF**	
	50	Silver Fox	00 - 05	**HF**	
RT	50	Road Tracer	02 - 06	**HF**	
	70	Fox Plus	01 - 05	**HF**	
	70	Pista, Pista Twin Light	01 - 05	**HF**	
	80	Cosy	01 - 06	**HF**	
RT	90	Road Tracer	02 - 06	**HF**	
	100	Cat	01 - 08	**HF**	
	100	Jet	96 - 99	**HF**	

ADLY					
	100	Silver Fox	01 - 05	**HF**	
RT	100	Road Tracer	02 - 06	**HF**	
	125	Cat	01 - 04	**CT**	
ITALJET					
	50	Bazooka	93 - 02	**HF**	
	50	Cruise	95 - 97	**HF**	
	50	Pista 2	92 - 97	**HF**	
	50	Scoop	93 - 97	**HF**	
	50	Yankee 8	94 - 02	**HF**	**HF**
TGB					
	250	Dynasty	06 - 06		**CT**
YAMAHA					
	50	Axis Pro Foot	92 - 99	**HF**	
CR	50	Target	91 - 95	**HF**	

YAMAHA					
CR	50	Z	91 - 95	**HF**	
JOG	50	R	02 - 07	**HF**	
YW	50	Zuma	02 - 11	**HF**	
JOG	90		90 - 91	**HF**	

Available compounds **HF** **SBS 109**

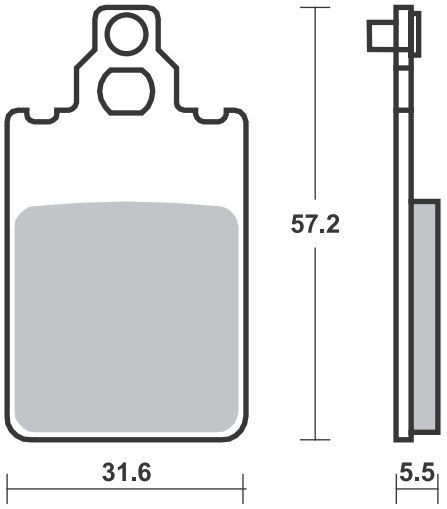

Available compounds **HF • CT** **SBS 110**

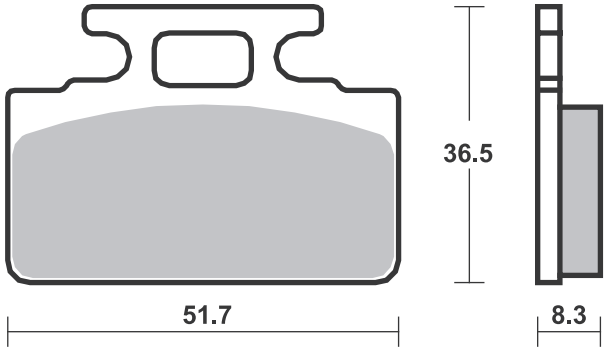

Available compounds **HF • CT** **SBS 111**

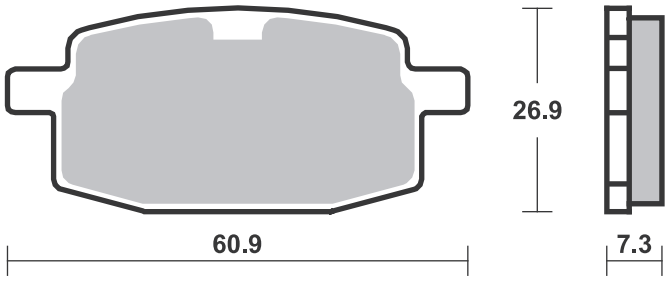

SBS 112 Recommended compound

HONDA					
NH	50	Lead SS,MR, MSE	84 - 85	**HF**	
NH	125	Lead Scooter	86 - 87	**CT**	

SBS 113 Recommended compound

KYMCO					
	125	Agility City	11 - 17		**CT**
MALAGUTI					
F-10	50		92 - 93	**HF**	

Available compounds **HF • CT** **SBS 112**

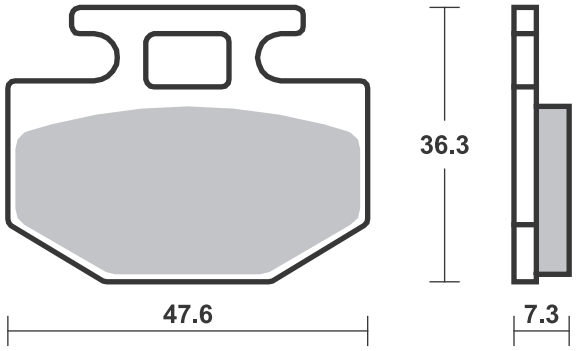

Available compounds **HF • CT** **SBS 113**

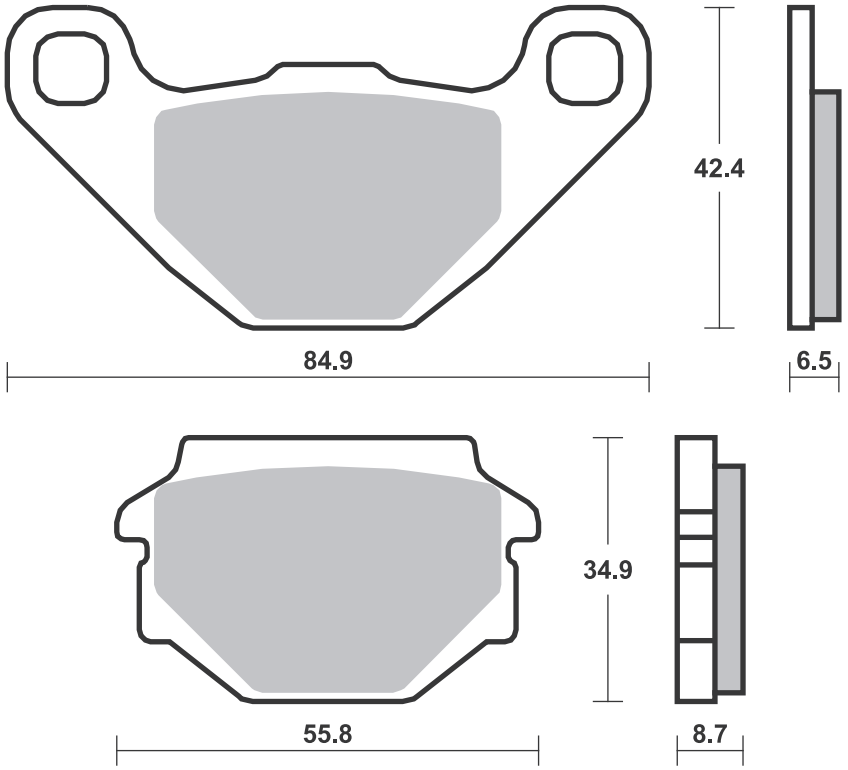

SBS 114 Recommended compound

YAMAHA					
JOG-Z	50		90-91	**HF**	
YE	50	Zest (Italy)	92-95	**HF**	
YM	50	Breeze, Fizz	95-95	**HF**	
YE	80	Zest (Italy)	93-94	**HF**	

SBS 115 Recommended compound

SYM					
	50	Super Fancy	98-06	**HF**	

SBS 117 Recommended compound

APRILIA					
SR	50	Replica	94-96	**HF**	
ITALJET					
	50	Formula	94-00	**HF**	
	80	Formula	94-97	**HF**	
	125	Formula	94-03	**CT**	

Available compounds **HF • CT** **SBS 114**

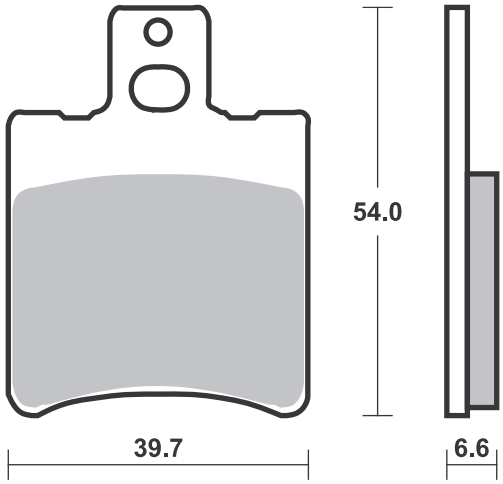

Available compounds **HF • CT** **SBS 115**

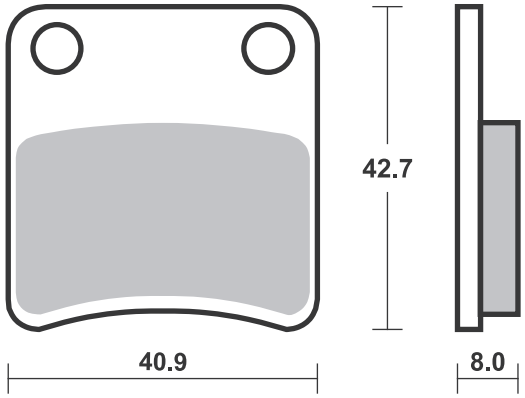

Available compounds **HF • CT** **SBS 117**

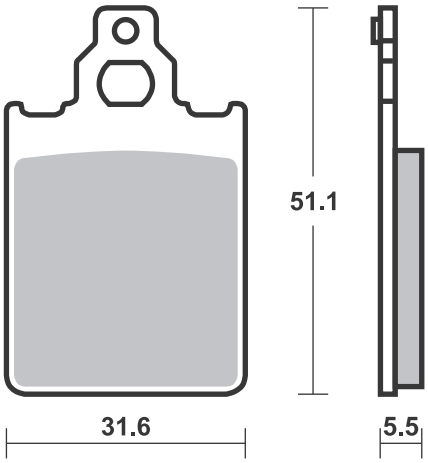

Dimensions in mm / Dimensions en mm • 1” = 25.4 mm , 1 mm = 0.04”

SBS 119 Recommended compound

				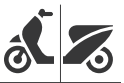	
HONDA					
NS-1	75		92 - 00	**HF**	
NSR	80	R	93 - 95	**HF**	
ITALJET					
	50	Rollercraft	08 - 12		**HF**
	125	Torpedo	08 - 11		**CT**
	150	Torpedo	08 - 12		**CT**
KEEWAY					
	100	Partner	06 - 10	**HF**	
	110	Partner	06 - 07	**HF**	
	125	Speed	06 - 12		**CT**
	150	Speed	06 - 09		**CT**
KYMCO					
	50	Super-9 A/C	02 - 07	**HF**	
	50	Super-9 L/C	02 - 07	**HF**	
	125	Agility 16+	14 - 16		**CT**
	150	Quannon	10 - 14	**CT**	**CT**
	200	Agility 16+	14 - 17		**CT**
	200	Agility R16	11 - 15		**CT**
	200	Like i	10 - 16	**CT**	**CT**
	250	People	03 - 12	**MS**	
SYM					
RS	125		05 - 06		**CT**
RS	150		05 - 06		**CT**

SBS 120 Recommended compound

					
CPI					
	50	GTR	02 - 02	**HF**	
	50	GTS	02 - 03	**HF**	
	125	GTR, GTS	02 - 03	**CT**	
	200	GTR, GTS	02 - 03	**CT**	
MALAGUTI					
R	125	Madison	99 - 09	**CT**	

Available compounds **HF • CT • MS** **SBS 119**

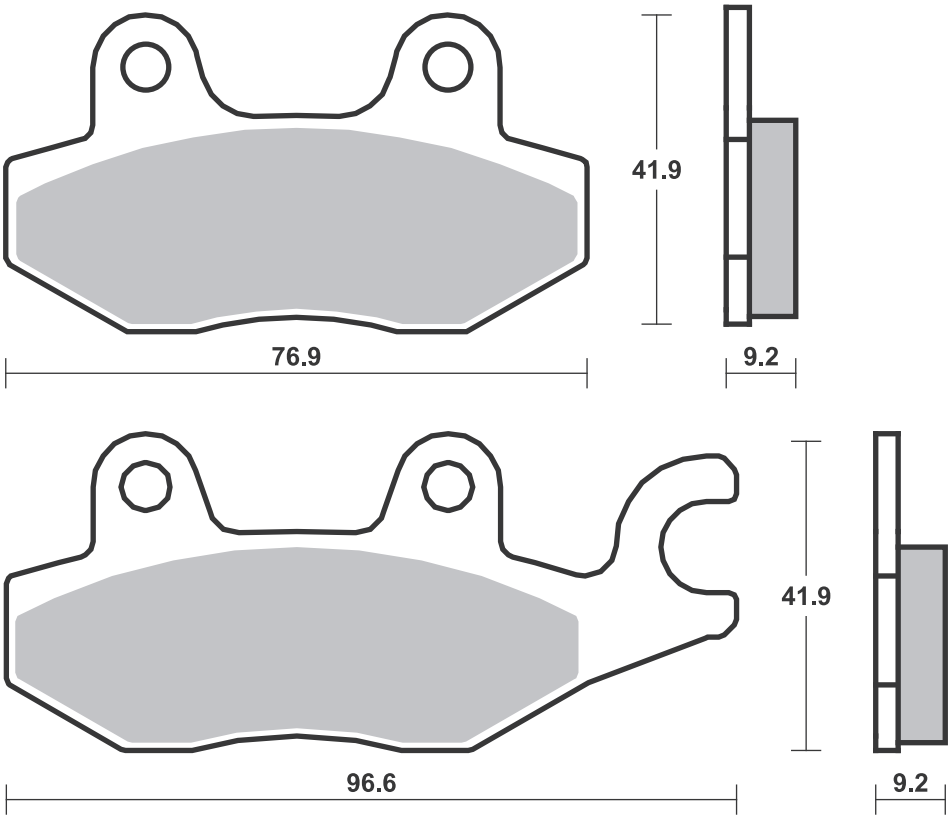

Available compounds **HF • CT • MS** **SBS 120**

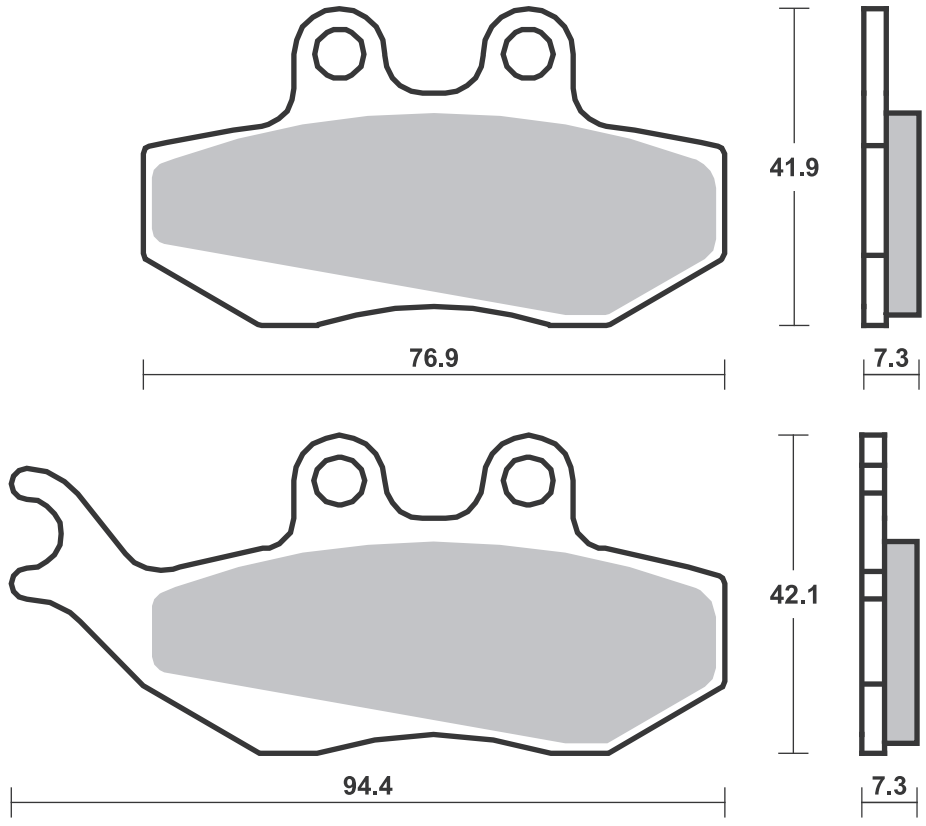

Dimensions in mm / Dimensions en mm • 1” = 25.4 mm , 1 mm = 0.04”

SBS 121 Recommended compound

HONDA					
NH	50	Lead	94 - 94	**HF**	
NS-1	75		92 - 00		**HF**
NSR	80	R	87 - 95		**HF**
NH	90	Yupy	90 - 94	**HF**	
NS	150		92 - 95	**HF**	
ITALJET					
	125	Amarcord	08 - 16	**HF**	
KYMCO					
CX	50	Curio Super	94 - 97	**HF**	

SBS 122 Recommended compound

SUZUKI					
UK	110	Adress	15 - 19	**HF**	
UC	125	Epicuro	99 - 02	**CT**	

Available compounds **HF** **SBS 121**

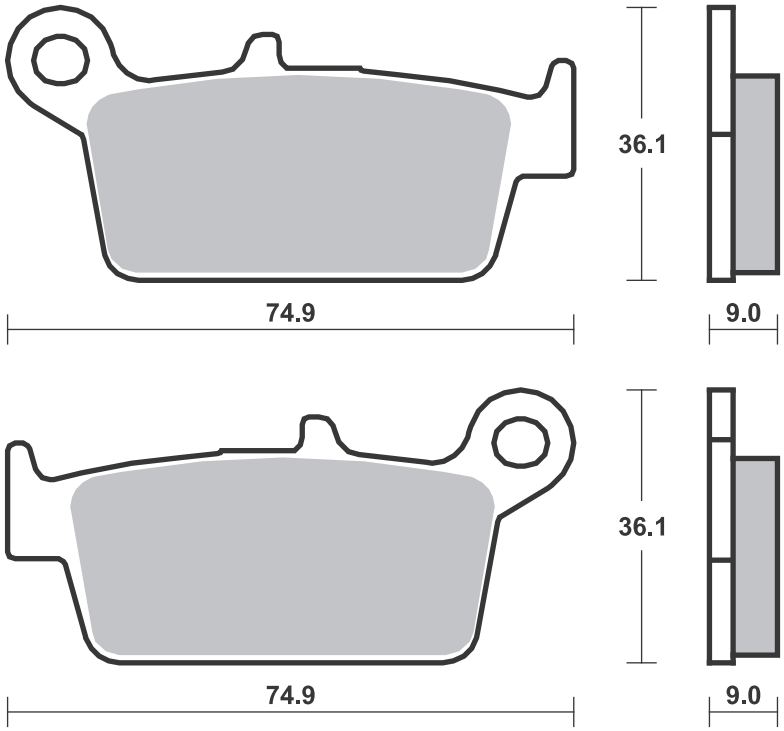

Available compounds **HF • CT** **SBS 122**

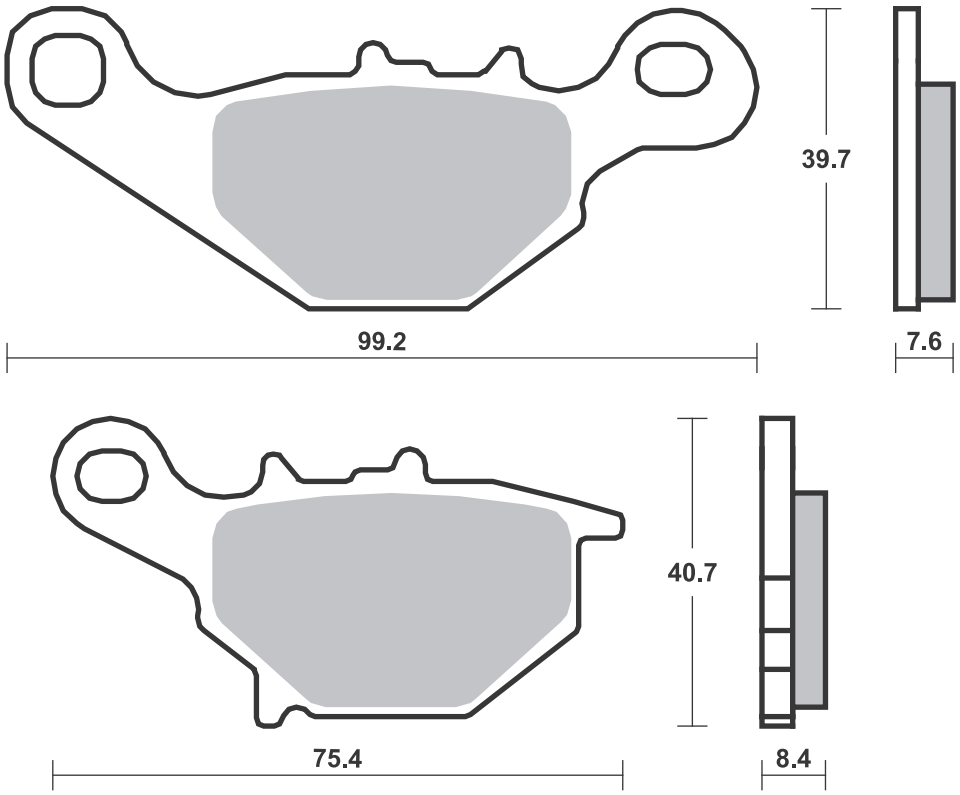

Dimensions in mm / Dimensions en mm • 1” = 25.4 mm , 1 mm = 0.04”

SBS 123 Recommended compound

APRILIA						
SR	50	Ditech	01-06	**HF**		
SR	50	Racing	00-04	**HF**		
SR	50	Replica (Liquid Cooled)	96-96	**HF**		
SR	50	Stealth, Racing	97-00	**HF**	**HF**	
SR	50	Street	05-12	**HF**		
CPI						
	50	GTR	03-09		**HF**	
DERBI						
	50	Vamos R (Brembo cal.)	95-95	**HF**		
HONDA						
	50	Formula	94-98	**HF**		
HYOSUNG						
	125	Boomer	03-03	**CT**		
	125	Exceed	02-06	**CT**		
	125	Grand Prix	98-04	**CT**		
HYOSUNG						
	125	Hyper	99-09	**CT**		
GPS	125	D	00-03	**CT**		
	150	Exceed	02-04	**CT**		
	150	Grand Prix	98-01	**CT**		
ITALJET						
	50	Formula	94-00		**HF**	
	80	Formula	94-97		**HF**	
	125	Formula	94-03		**CT**	
KEEWAY						
	125	Arn	06-08	**CT**		
	150	Arn	06-08	**CT**		
MALAGUTI						
	50	Yesterday	97-02	**HF**		
EL	50	Crosser	97-00	**HF**		
F-10	50	Jet-Line	94-98	**HF**		
F-12	50	Phantom A.C.	99-03	**HF**		
SL	50	Centro	96-00	**HF**		
PEUGEOT						
	50	Speedake (Brembo cal.)	94-01	**HF**		
	50	Speedfight LC, (Brembo cal.)	96-15	**HF**		
TOMOS						
	50	Revival	02-04	**HF**		
	50	Streetmate	03-05	**HF**		
YAMAHA						
BW	50	Bump	97-02	**HF**		
BW	50	Next Generation	96-07	**HF**		
BW	50	Sports Spec R	02-06	**HF**		
BW	50	Spy	95-03	**HF**		
YN	50	Neo's, LC	97-16	**HF**		
	100	Aerox	00-06	**HF**		

SBS 125 Recommended compound

HONDA						
NHX	110		08-09	**HF**		
PS	125	i	07-13	**CT**		
SES	125	Dylan	02-07	**CT**		
SH	125		02-08	**CT**		
PS	150	i	07-11	**CT**		
SES	150	Dylan	02-06	**CT**		
SH	150		02-08	**CT**		
SUZUKI						
AN	250	Burgman	98-03		**MS**	
AN	400	Burgman	99-00		**MS**	

SBS 127 Recommended compound

HONDA						
CN	250		93-04	**CT**		

Available compounds **HF • CT** **SBS 123**

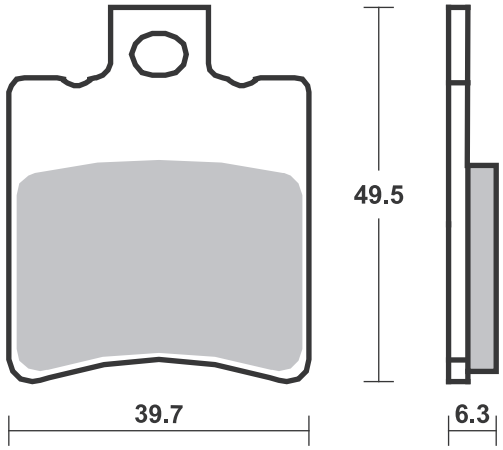

Available compounds **HF • CT • MS** **SBS 125**

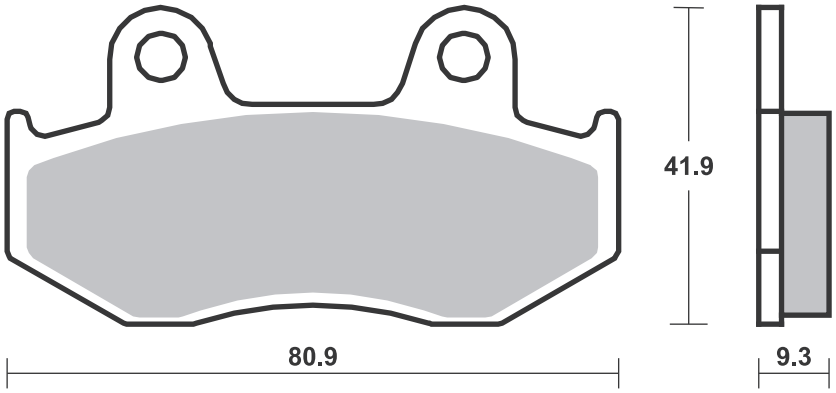

Available compounds **HF • CT** **SBS 127**

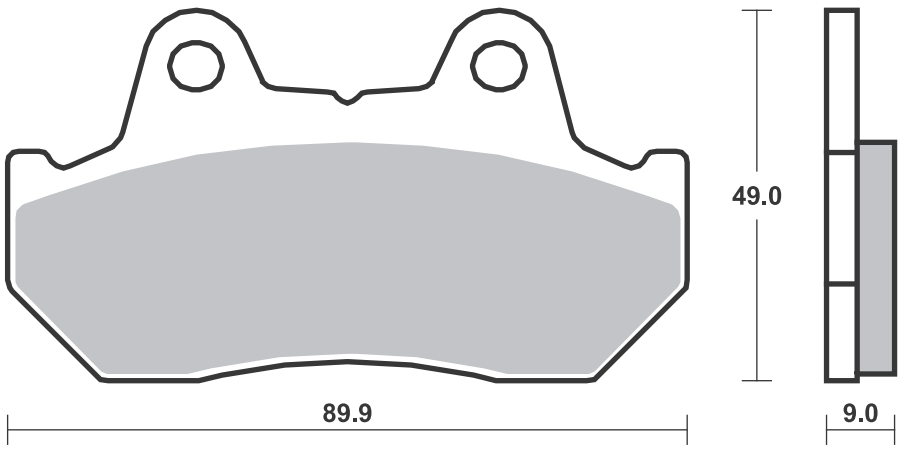

Dimensions in mm / Dimensions en mm • 1” = 25.4 mm , 1 mm = 0.04”

SBS 128 Recommended compound

					
ITALJET					
	125	Jupiter	02 - 03	**CT**	
	150	Jupiter	02 - 03	**CT**	
	250	Jupiter	01 - 03	**CT**	
YAMAHA					
YP	250	D Majesty DX	98 - 00	**MS**	
YP	250	Majesty	96 - 04	**MS**	
YP	250	Majesty DX/ABS	99 - 14	**MS**	
YP	400	Majesty	05 - 13	**MS**	
XP	500	TMAX	04 - 07	**MS**	

SBS 129 Recommended compound

					
SYM					
	50	Jet Sport X SR	06 - 14		**HF**

SBS 132 Recommended compound

					
KEEWAY					
	125	Speed	06 - 12	**CT**	
	150	Speed	06 - 09	**CT**	
MALAGUTI					
	50	Enduro Dune	87 - 88	**HF**	**HF**
CR-1	50	Crosser	95 - 96	**HF**	
F-12	50	Phantom	94 - 98	**HF**	
F-15	50	Fire Fox	96 - 08	**HF**	
TGB					
	50	Corona	03 - 05	**HF**	
R	50	X	06 - 14	**HF**	

Available compounds **HF • CT • MS** **SBS 128**

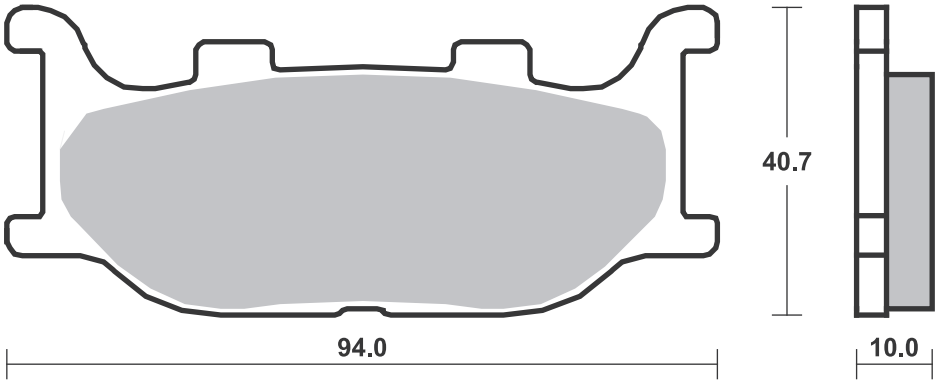

Available compounds **HF • CT** **SBS 129**

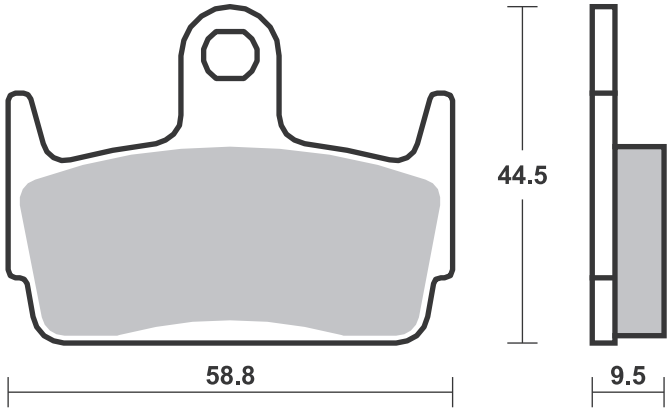

Available compounds **HF • CT** **SBS 132**

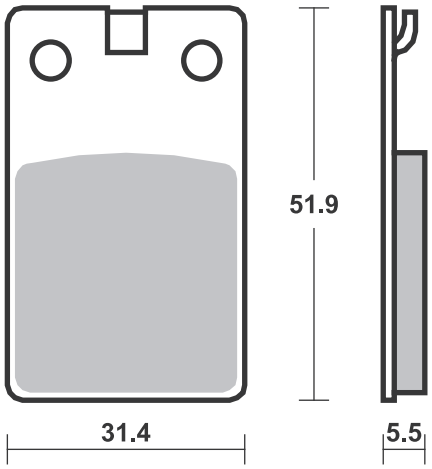

Dimensions in mm / Dimensions en mm • 1” = 25.4 mm , 1 mm = 0.04”

SBS 134 Recommended compound

SUZUKI					
UH	200	Burgman	14 - 18	**CT**	
YAMAHA					
TZM	50	R	94 - 97	**HF**	
TZR	50		90 - 02	**HF**	

SBS 135 Recommended compound

SUZUKI					
GSXR	50		87 - 87	**HF**	
OR	50	E	80 - 80	**HF**	
RG	50	GAG	87 - 92	**HF**	
RG	50	Gamma	90 - 96	**HF**	
ZR	50		81 - 87	**HF**	
SYM					
	125	Husky	96 - 98	**CT**	

Available compounds **HF • CT • MS** **SBS 134**

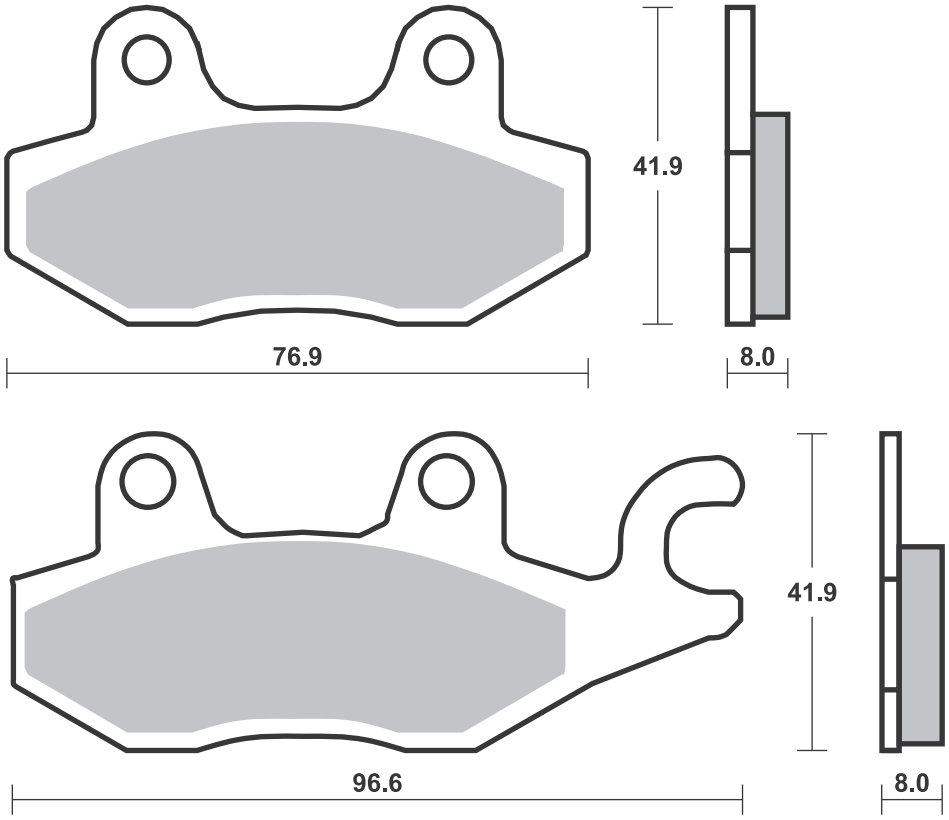

Available compounds **HF • CT** **SBS 135**

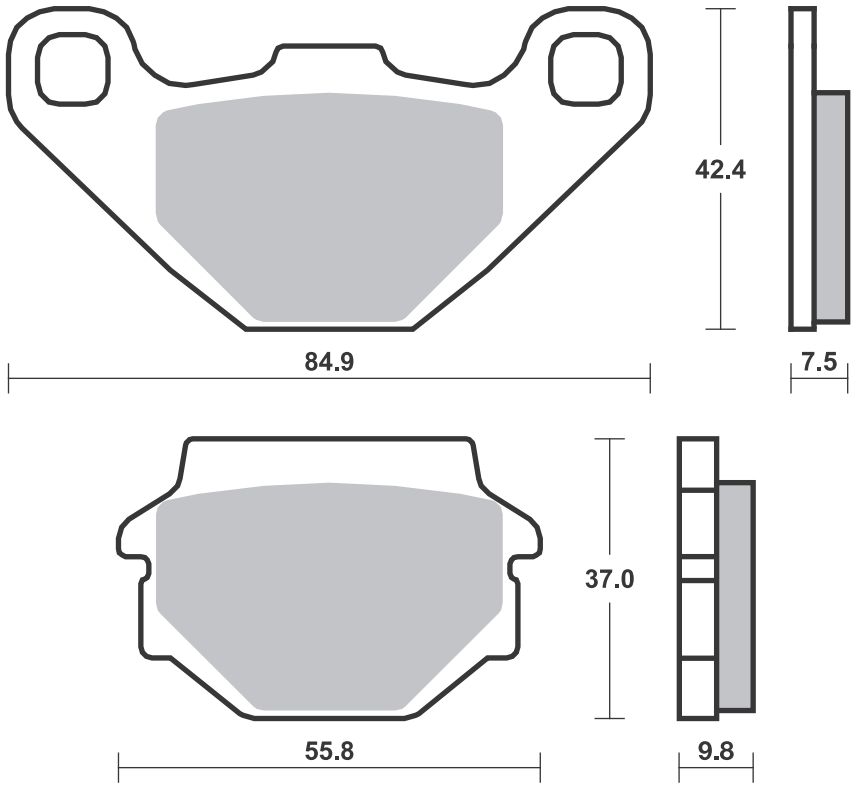

SBS 137 Recommended compound

YAMAHA			
TZR	50	93 - 02	**HF**

SBS 138 Recommended compound

DERBI			
	50 Easy	96 - 98	**HF**

Available compounds **HF • CT** **SBS 137**

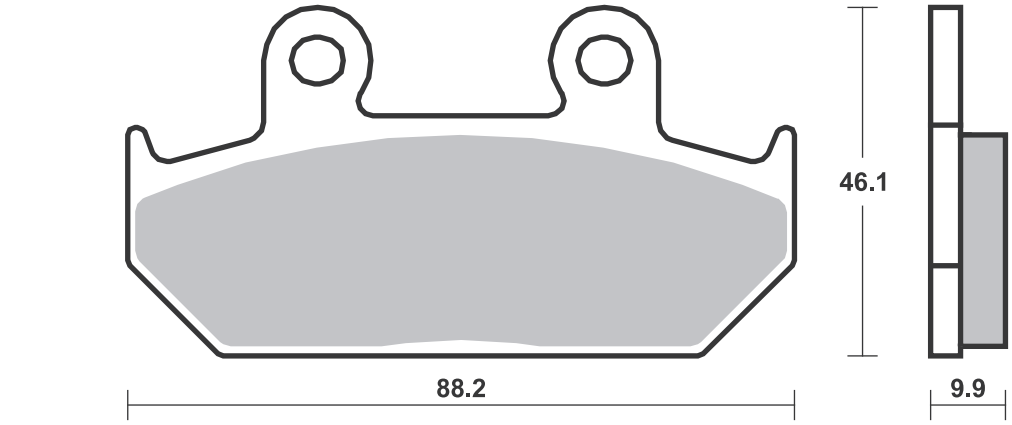

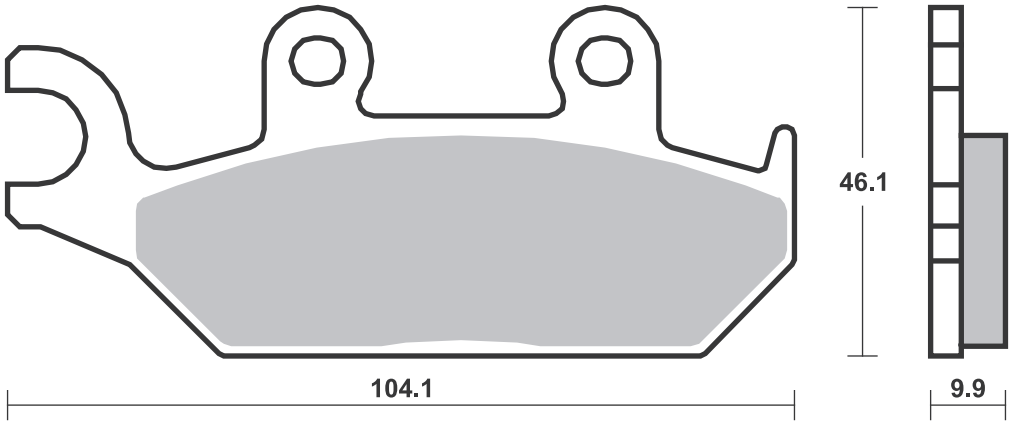

Available compounds **HF • CT** **SBS 138**

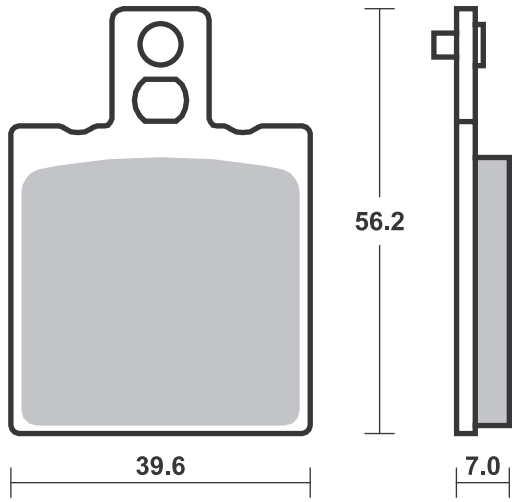

SBS 140 Recommended compound

SYM					**SYM**				
	50	Allo	11 - 15	**HF**		125	Crox	14 - 15	**CT**
	50	Crox	14 - 15	**CT**		125	Fiddle	09 - 16	**CT**
	50	Fiddle	09 - 14	**HF**		125	Fiddle III	16 - 19	**CT**
	50	Fiddle III	16 - 19	**CT**		125	Jet 14	17 - 19	**CT**
	50	Jet 4 Naked	11 - 13	**HF**		125	Jet 4	11 - 13	**HF**
	50	Jet 4 R	11 - 13	**HF**		125	Megalo	02 - 05	**CT**
	50	Jet BasiX	07 - 09	**HF**		125	New Duke	02 - 07	**CT**
	50	Jet Euro X	05 - 12	**HF**		125	Super Duke	95 - 01	**CT**
	50	Jet Sport X	06 - 14	**HF**		125	Symphony	09 - 15	**CT**
	50	Jet Sport X SR	06 - 14	**HF**		125	Symphony EX	17 - 17	**CT**
	50	Jet, Alpha	95 - 97	**HF**		125	Symphony S	11 - 17	**CT**
	50	Jungle	96 - 02	**HF**		125	Symphony SR	11 - 17	**CT**
	50	Mask	00 - 05	**HF**		125	Symphony ST	15 - 19	**CT**
	50	Mask LC	00 - 05	**HF**		125	Symply	08 - 14	**CT**
	50	Orbit II	12 - 13	**HF**		125	X'Pro	14 - 16	**CT**
	50	Red Devil	97 - 09	**HF**	HD	125	Evo DT	10 - 10	**CT**
	50	Super Fancy	95 - 97	**HF**	HD2	125	Evo	14 - 14	**CT**
	50	Symphony	09 - 15	**HF**		150	Attila	00 - 03	**CT**
	50	Symphony SR	11 - 15	**HF**		150	Crox	14 - 16	**CT**
	50	Symphony ST	15 - 15	**CT**		150	Jet 4	11 - 14	**HF**
	50	Symply	08 - 14	**HF**		150	Super Duke	96 - 01	**CT**
	50	X'Pro	13 - 17	**HF**		150	Symphony S	11 - 15	**CT**
	100	Jet	00 - 00	**HF**		150	Symphony SR	11 - 15	**CT**
	100	Jet Euro X	05 - 05	**HF**		200	Fiddle II	11 - 13	**CT**
	100	Jet Sport X	05 - 05	**HF**		200	Fiddle III	16 - 19	**CT**
	100	Party	97 - 00	**HF**		200	Joyride Evo	09 - 15	**CT**
	100	Super Fancy	95 - 00	**HF**	HD	200	Evo	07 - 13	**CT**
	110	Star	03 - 03	**HF**	HD2	200	Evo	14 - 14	**CT**
	125	Allo	11 - 15	**CT**		300	Citycom	09 - 15	**CT** **CT**
	125	Citycom	09 - 14	**CT**		300	Citycom S	15 - 17	**CT** **CT**

SBS 141 Recommended compound

CPI					**KEEWAY**				
	50	Aragon Club	07 - 09	**HF**		150	Matrix Racing Sport	10 - 12	**CT**
	50	Aragon GP	06 - 09	**HF**					
	50	Aragon SP	07 - 09	**HF**	**PEUGEOT**				
	50	Freaky	07 - 07	**HF**		50	Vivacity Sportline	11 - 11	**HF**
	50	Hussar	03 - 06	**HF**					
	50	Oliver	03 - 12	**HF**	**TGB**				
	50	Oliver City	03 - 12	**HF**	GT	50	Veloce	09 - 12	**HF**
	50	Oliver Sport	03 - 12	**HF**					
	50	Popcorn	03 - 06	**HF**					
	125	Aragon GP	07 - 12	**CT**					
ITALJET									
SX1	50		08 - 10	**HF**					
KEEWAY									
	50	Flash Electric	10 - 12	**HF**					
	50	Focus	06 - 15	**HF**					
	50	Matrix	06 - 15	**HF**					
	50	Matrix Electric	10 - 15	**HF**					
	50	Matrix Racing Sport	10 - 16	**HF**					
F-NKD	50		10 - 11	**HF**					
RY8	50		07 - 16	**HF**					
	125	Focus	06 - 08	**CT**					
	125	Matrix	06 - 08	**CT**					
	125	Matrix Racing Sport	10 - 16	**CT**					
	150	Focus	06 - 09	**CT**					
	150	Matrix	06 - 08	**CT**					

Available compounds **HF • CT** **SBS 140**

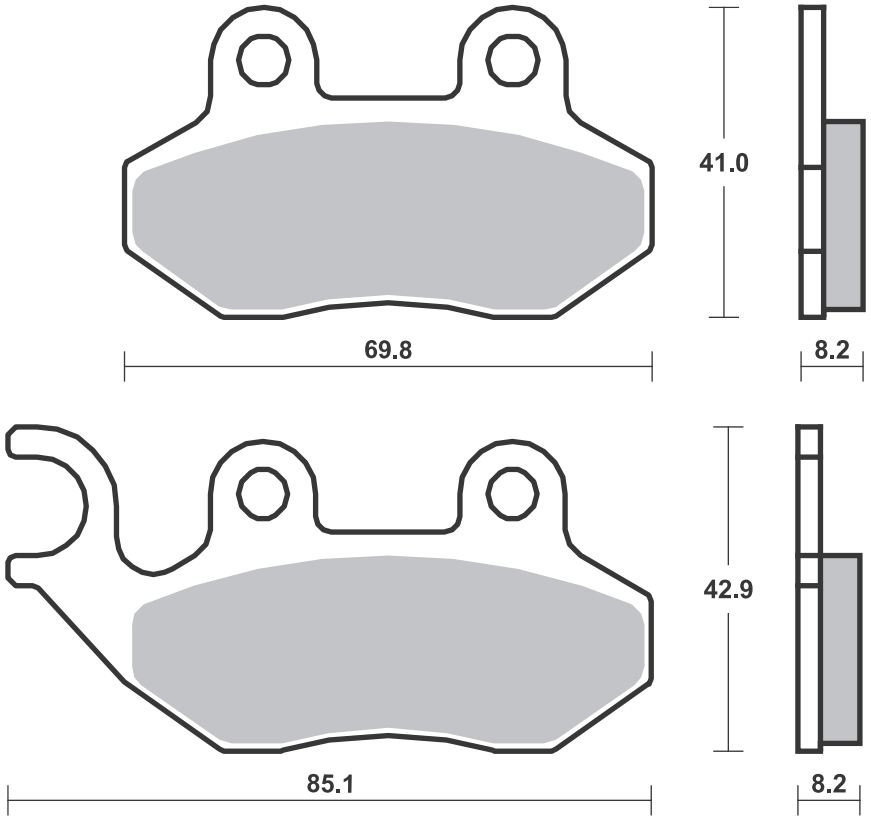

Available compounds **HF • CT** **SBS 141**

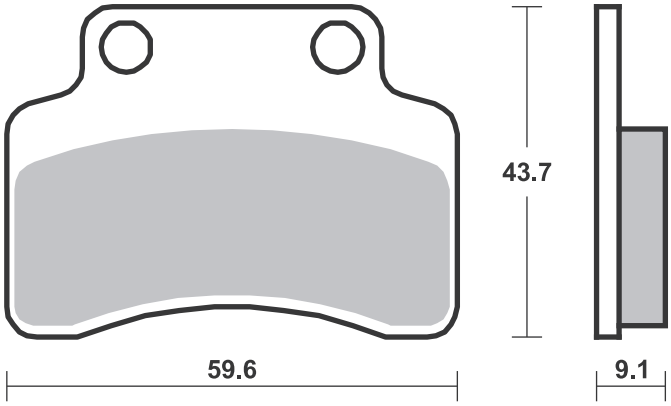

SBS 142 Recommended compound

DERBI			
	50 Sonar	10 - 11	**HF**

SBS 143 Recommended compound

CPI			
	125 GTR, GTS	02 - 03	**CT**
	200 GTR, GTS	02 - 03	**CT**

Available compounds **HF • CT • MS** **SBS 142**

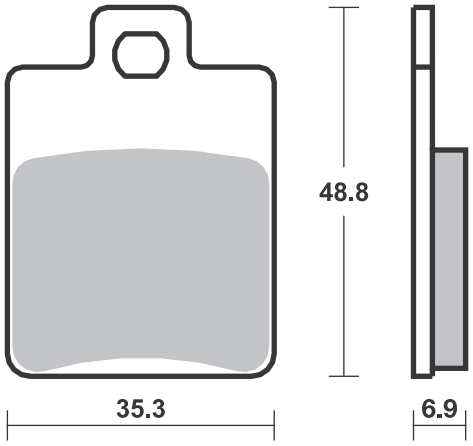

Available compounds **HF • CT** **SBS 143**

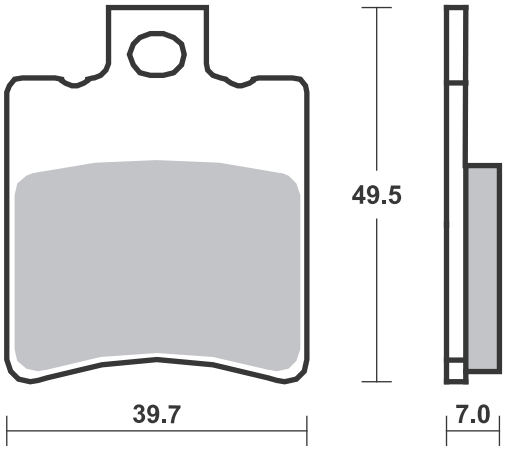

SBS 144 Recommended compound

KYMCO				
	50	Super-9	00 - 01	**HF**
ZX	50	Super Fever	02 - 06	**HF**
	125	Super-9	00 - 01	**CT**
	250	Super-9	00 - 05	**CT**

SBS 145 Recommended compound

CPI			
	50	GTS	02 - 03	**HF**

Available compounds **HF • CT** **SBS 144**

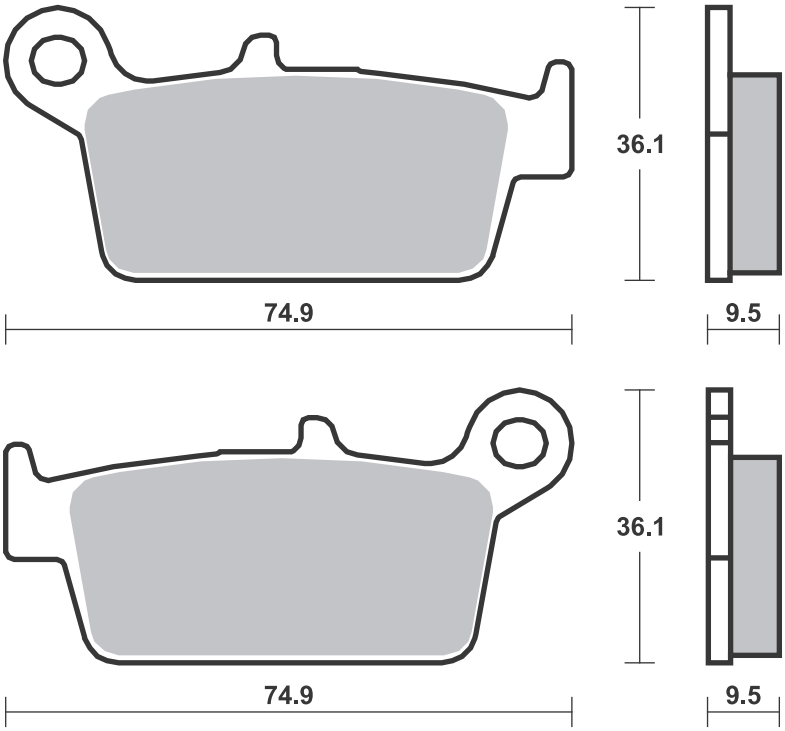

Available compounds **HF • CT • MS** **SBS 145**

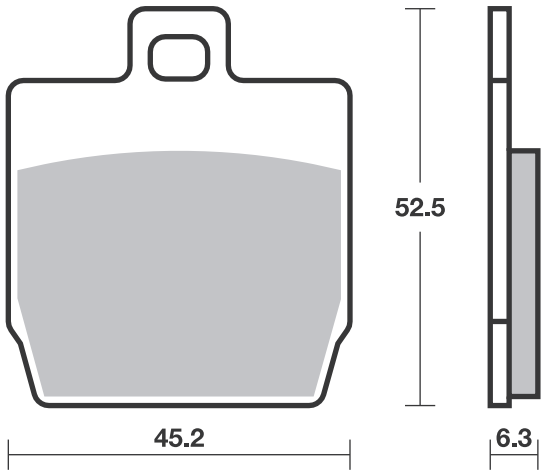

SBS 146 Recommended compound

KAWASAKI					
SC	250	Epsilon	02 - 06	**MS**	
SUZUKI					
AN	250	Burgman	98 - 06	**MS**	
AN	400	Burgman	99 - 06	**MS**	
SYM					
	125	GTS	07 - 11	**CT**	
	125	Joymax Sport	16 - 16	**CT**	
	250	GTS	07 - 11	**MS**	
	250	Joymax Sport	16 - 17	**MS**	
	300	Joyride Evo i	10 - 10	**MS**	
GTS	300	Evo i	11 - 15	**MS**	
	500	GT	07 - 04	**MS**	

SBS 148 Recommended compound

DERBI					
	50	Senda R DRD	03 - 04	**HF**	
GPR	50	R	98 - 03	**HF**	
	125	Atmosphere	99 - 99	**CT**	
	180	Predator	99 - 99	**CT**	
HUSQVARNA					
SM	50		02 - 02	**HF**	
ITALJET					
SM	50		02 - 05	**HF**	
TOMOS					
SE	50		05 - 06	**HF**	

SBS 149 Recommended compound

APRILIA					
SR	50	WWW, Netscaper	97 - 99	**HF**	

Available compounds **HF • CT • MS** **SBS 146**

1 set = 4 pcs.

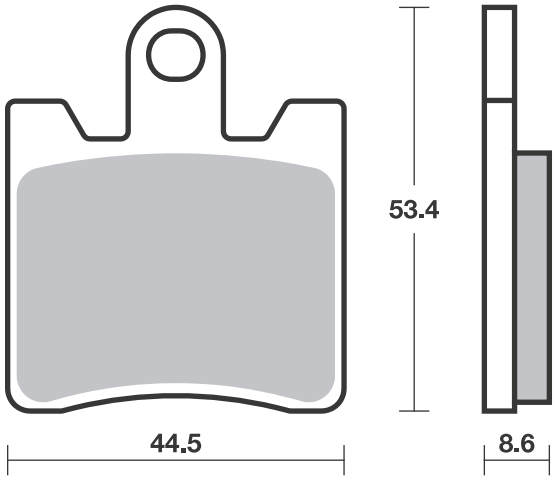

Available compounds **HF • CT** **SBS 148**

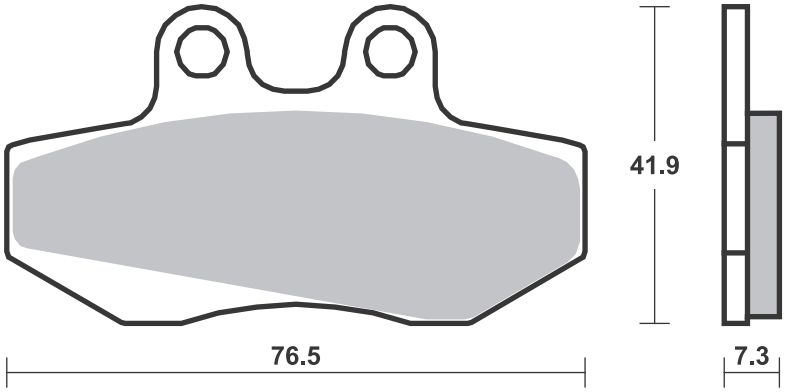

Available compounds **HF • CT** **SBS 149**

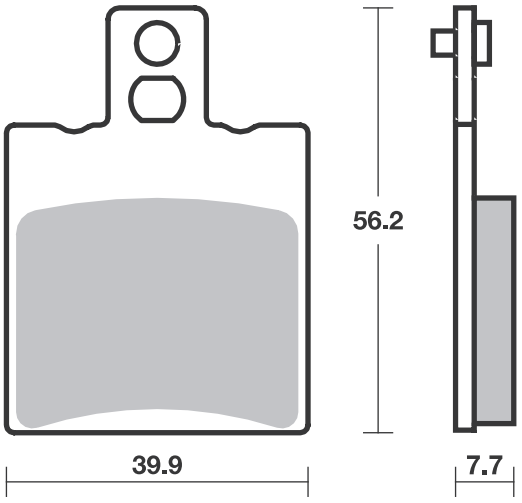

SBS 150 Recommended compound

SYM				
	125	Husky	99 - 05	**CT**
	150	Husky	99 - 02	**CT**

SBS 151 Recommended compound

ITALJET				
	125	Dragster	20 - 20	**CT**
	200	Dragster	20 - 20	**CT**
YAMAHA				
XQ	125	Maxter	01 - 05	**CT**
YP	125	Majesty	01 - 11	**CT**
XQ	150	Maxter	01 - 02	**CT**
YP	150	Majesty	01 - 02	**CT**

Available compounds **HF • CT** **SBS 150**

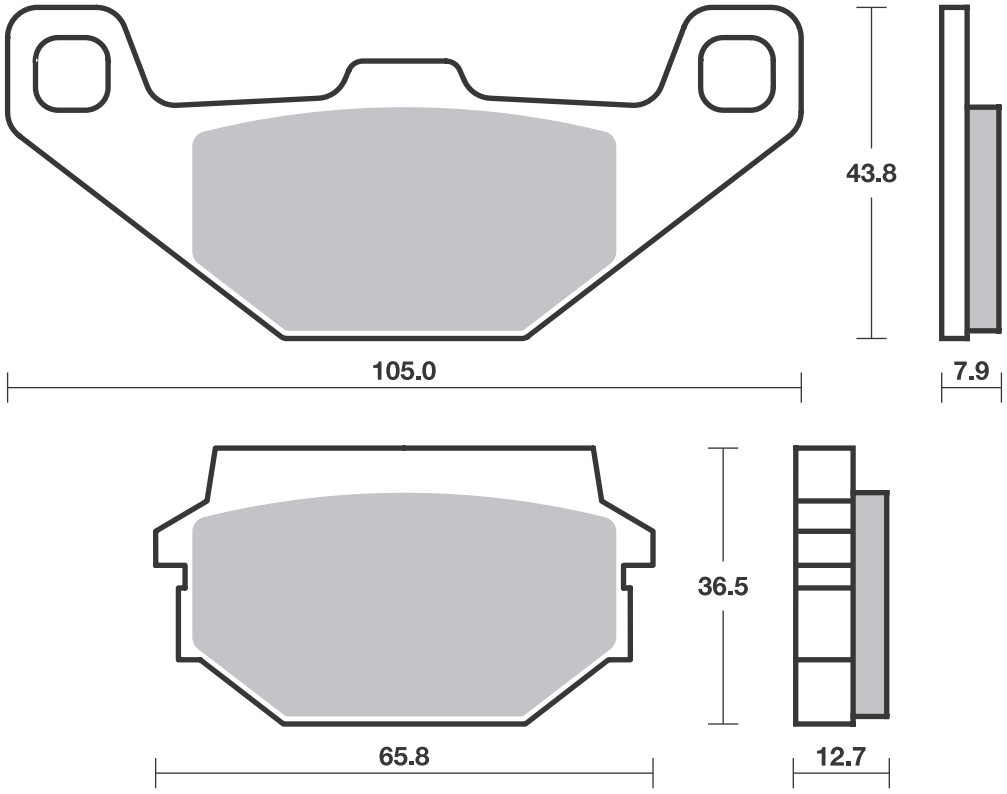

Available compounds **HF • CT • MS** **SBS 151**

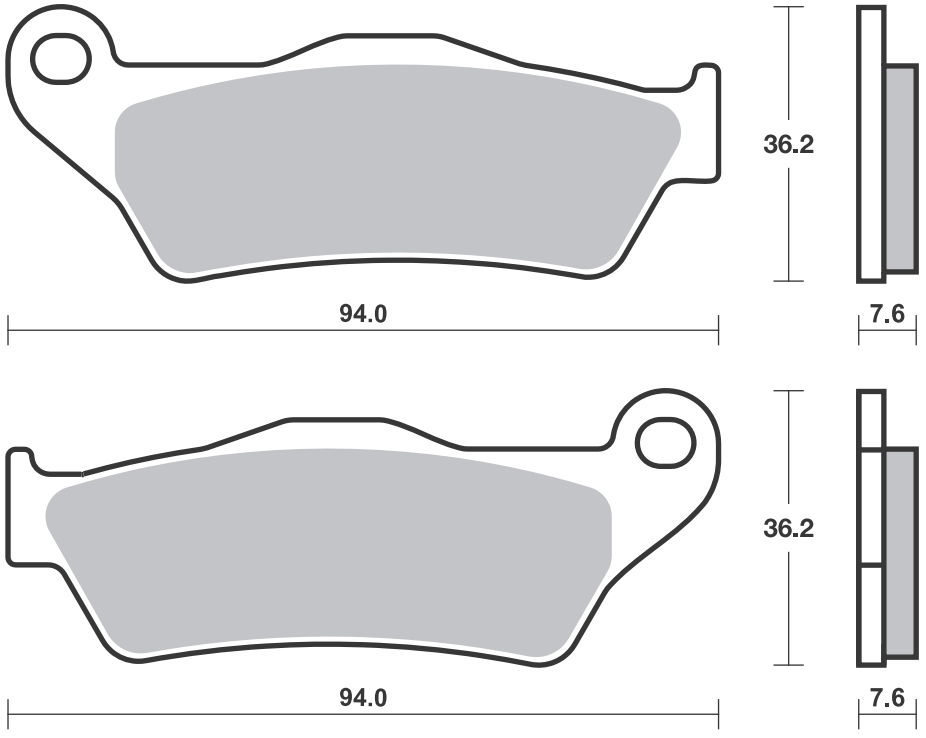

Dimensions in mm / Dimensions en mm • 1” = 25.4 mm , 1 mm = 0.04”

SBS 152 Recommended compound

APRILIA				
SR	50	Ditech	01 - 06	**HF**
SR	50	Racing	00 - 04	**HF**
SR	50	Street	05 - 12	**HF**
	200	Sportcity	04 - 08	**CT**
DERBI				
	125	Rambla	08 - 14	**CT**
	300	Rambla	08 - 12	**MS**
MALAGUTI				
R	125	Madison	99 - 09	**CT**
	250	Madison	99 - 04	**MS**

SBS 153 Recommended compound

APRILIA				
SR	125		99 - 03	**CT**
SR	150		00 - 03	**CT**

Available compounds **HF • CT • MS** **SBS 152**

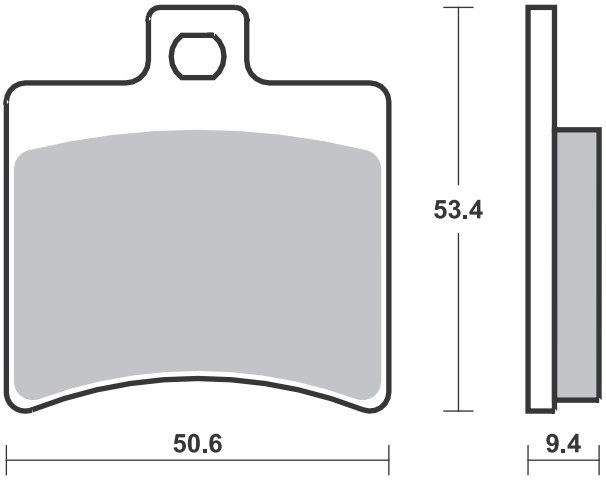

Available compounds **HF • CT • MS** **SBS 153**

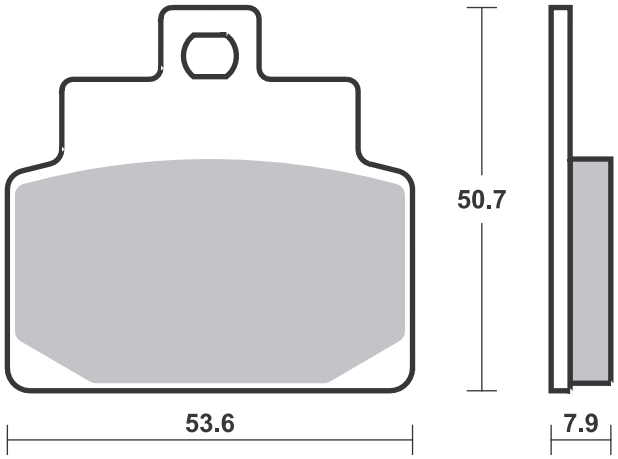

SBS 154 Recommended compound

					
KYMCO					
	50	Agility (4T) R16	06 - 15	**HF**	
	50	People	99 - 06	**HF**	
	50	Super-8	08 - 16	**HF**	
	50	Super-9 L/C	02 - 07		**HF**
	125	Agility 16+	14 - 16	**CT**	
	125	People	01 - 09	**CT**	
	125	People One i	14 - 16	**CT**	
	125	Super-8	08 - 15	**CT**	
	125	Super-9	00 - 01		**CT**
S	125	People	05 - 08	**CT**	
	150	People	01 - 06	**CT**	
	200	Agility 16+	14 - 17	**CT**	
	200	Agility R16	11 - 15	**CT**	
S	200	People	05 - 07	**CT**	
	250	Super-9	00 - 05		**CT**
SYM					
	125	Joyride	01 - 06		**CT**
HD	125		04 - 10	**CT**	
	150	Joyride	01 - 06		**CT**
	200	Joyride	01 - 08		**CT**
HD	200		04 - 06	**CT**	
	500	GT	07 - 04		**MS**

SBS 155 Recommended compound

					
YAMAHA					
YP	125	X-Max ABS	11 - 16		**CT**
YP	125	X-Max Business ABS	11 - 13		**CT**
YP	250	D Majesty DX	98 - 00		**MS**
YP	250	Majesty DX/ABS	99 - 14		**MS**
YP	250	X-Max	05 - 13		**MS**

Available compounds **HF • CT • MS** **SBS 154**

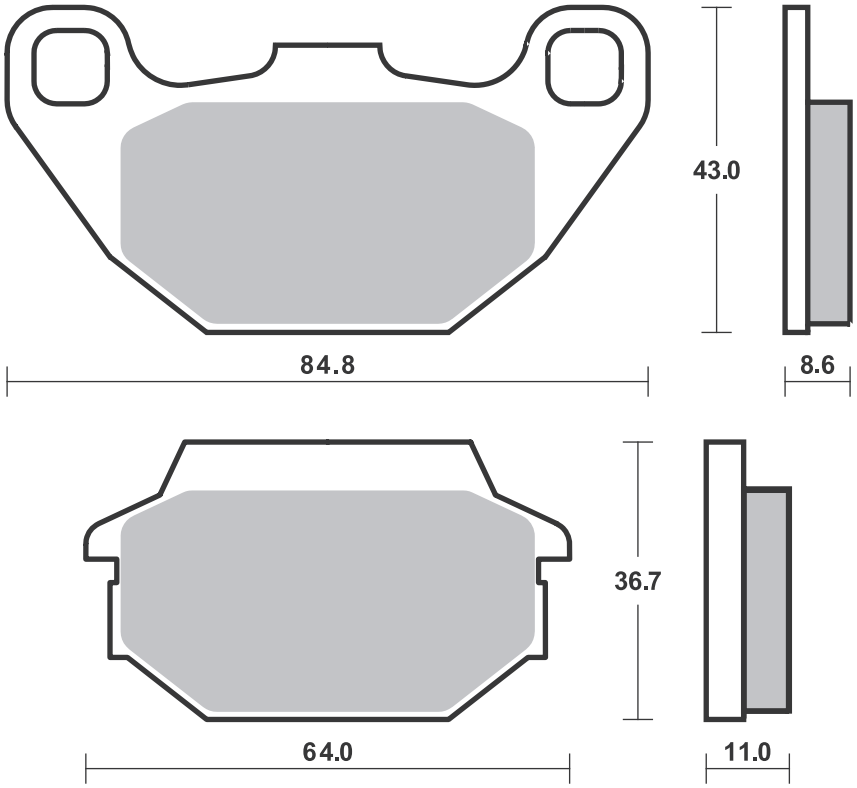

Available compounds **HF • CT • MS** **SBS 155**

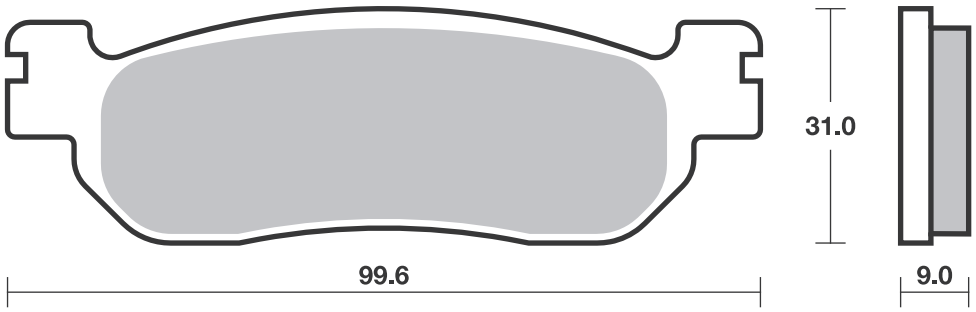

SBS 156 Recommended compound

					
HONDA					
NSS	250	Reflex	01 - 07	**MS**	
FJS	400	Silverwing	06 - 08	**MS**	
FSC	600	Silverwing	01 - 08	**MS**	
PEUGEOT					
	125	Looxor	03 - 07	**CT**	

SBS 157 Recommended compound

					
CPI					
	50	GTR	03 - 09	**HF**	
	125	X-Large	02 - 03	**CT**	**CT**
	200	X-Large	02 - 03	**CT**	**CT**
DERBI					
	50	Senda DRD Pro SM	05 - 11	**HF**	
	125	Senda DRD SM	10 - 14	**HF**	
ITALJET					
	125	Dragster	20 - 20		**CT**
	200	Dragster	20 - 20		**CT**
PEUGEOT					
	50	Speedfight 3 (LC)	10 - 16		**HF**
	50	Speedfight 3 RS (LC)	10 - 16		**HF**
	50	Speedfight 4 (LC)	15 - 16		**HF**
YAMAHA					
XQ	125	Maxter	01 - 05		**CT**
YP	125	Majesty	01 - 11		**CT**
YP	125	X-Max	06 - 18		**CT**
YP	125	X-Max Sport Ed.	11 - 13		**CT**
XQ	150	Maxter	01 - 02		**CT**
YP	150	Majesty	01 - 02		**CT**

Available compounds **HF • CT • MS** **SBS 156**

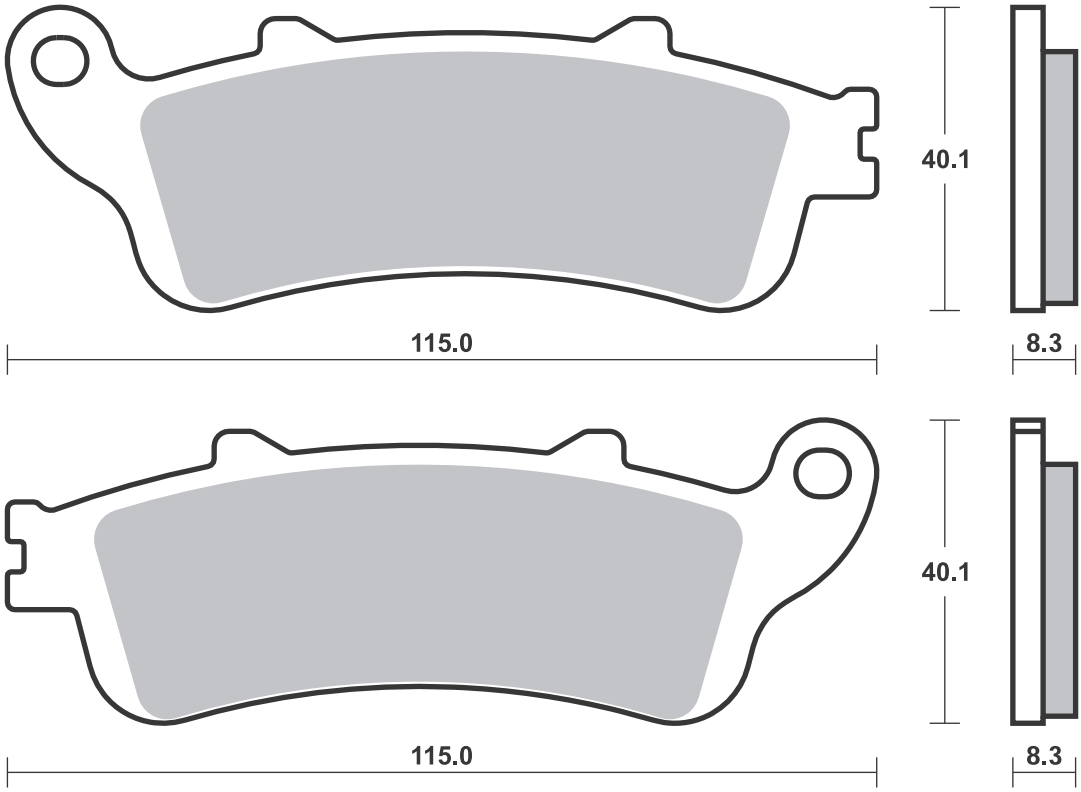

Available compounds **HF • CT • MS** **SBS 157**

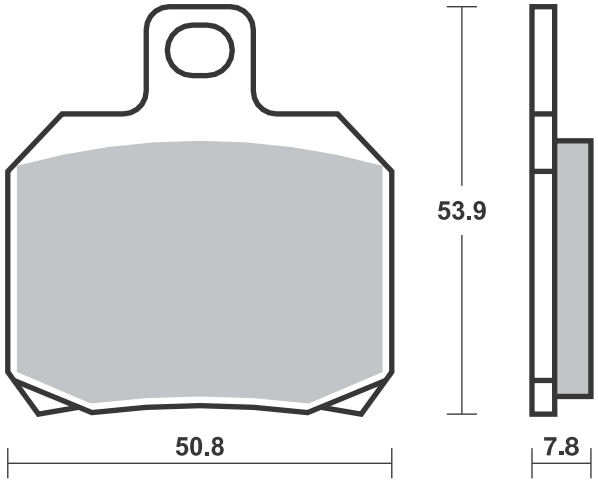

SBS 158 Recommended compound

HONDA				
NSS	250	Reflex	01 - 07	**MS**

SBS 159 Recommended compound

KYMCO				
	125	New Downtown	16 - 17	**CT**
	125	People GTi	12 - 15	**CT**
	125	X-Town CT	20 - 20	**CT**
	200	People GTi	12 - 15	**CT**
	300	People Gti	12 - 15	**MS**
	300	People S	20 - 20	**MS**
	300	X-Town CT	20 - 20	**MS**
	350	New Downtown	16 - 17	**MS**
MALAGUTI				
	250	Madison	99 - 04	**MS**

Available compounds **HF • CT • MS** **SBS 158**

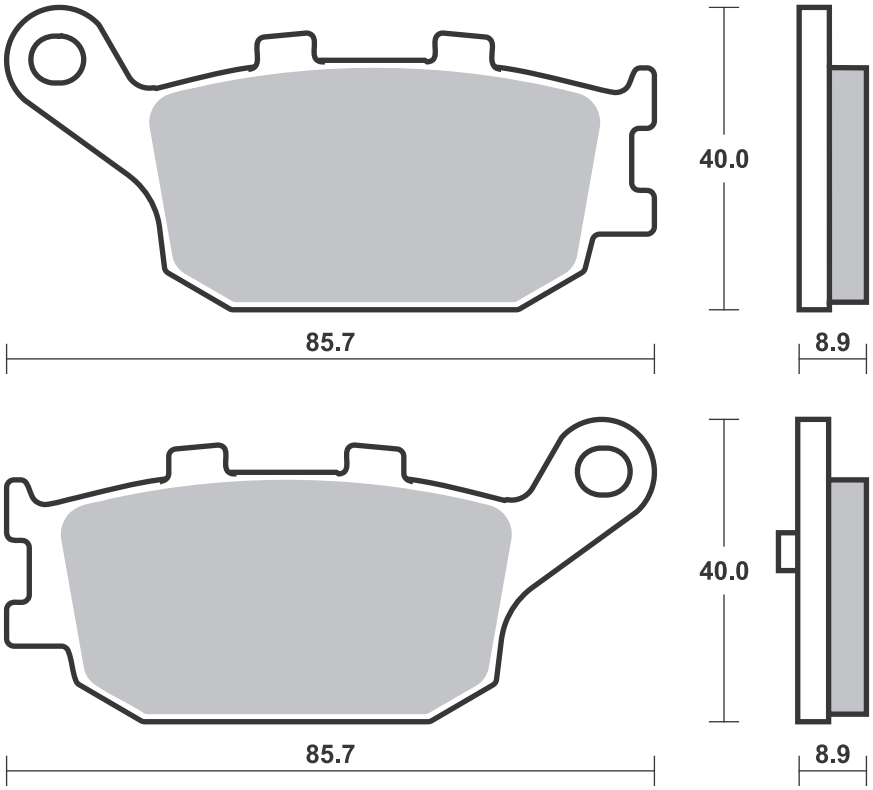

Available compounds **HF • CT • MS** **SBS 159**

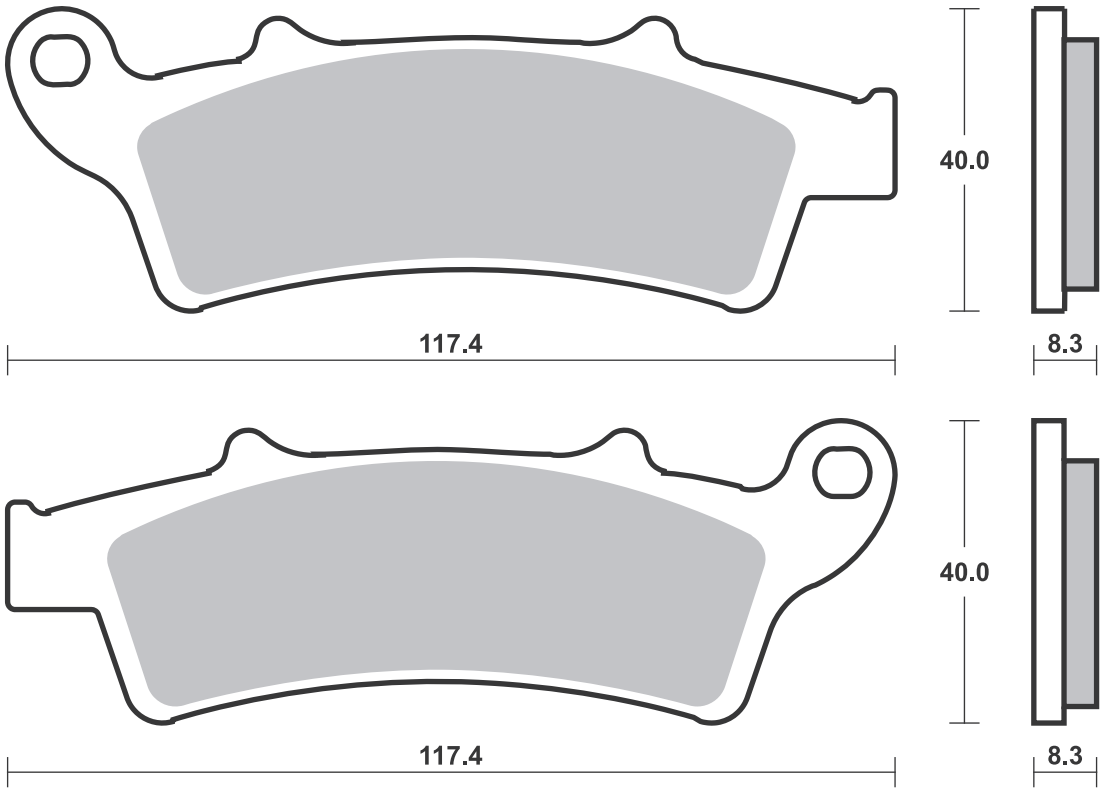

Dimensions in mm / Dimensions en mm • 1” = 25.4 mm , 1 mm = 0.04”

SBS 160 Recommended compound

					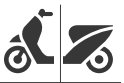
HONDA					
CN	250	Helix	86 - 87	**CT**	

SBS 163 Recommended compound

					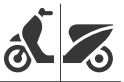
BENELLI					
	350	Zenzero	12 - 15	**CT**	
KYMCO					
	50	Agility	05 - 08	**HF**	
	50	Agility (4T) R10	06 - 14	**HF**	
	50	Agility (4T) R12	06 - 15	**HF**	
RS	50	Agility Naked	10 - 15	**HF**	
	125	Agility	06 - 11	**CT**	
	125	Agility City	11 - 17	**CT**	
	125	Like	11 - 16	**CT**	
TGB					
	50	203	05 - 08	**HF**	
	50	Akros tec 5	99 - 04	**HF**	
	50	Apollo	99 - 03	**HF**	
	50	Fire, Sky	03 - 05	**HF**	
	90	Apollo	99 - 02	**HF**	
	250	Dynasty	06 - 06	**CT**	

Available compounds **HF • CT** **SBS 160**

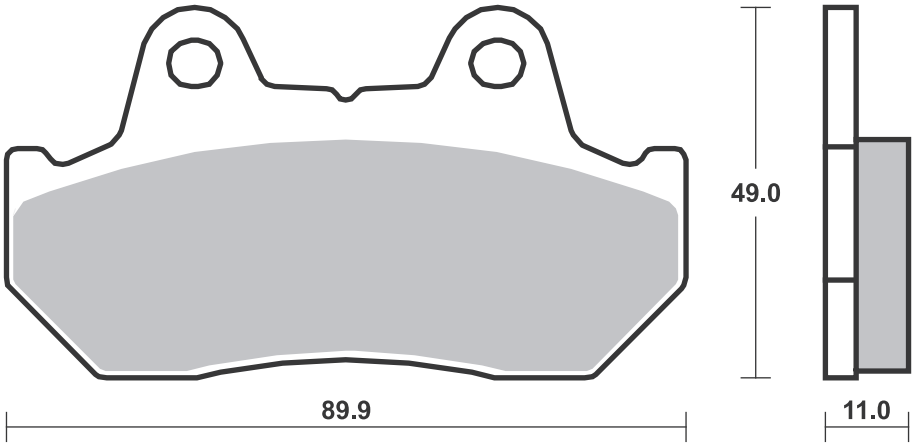

Available compounds **HF • CT** **SBS 163**

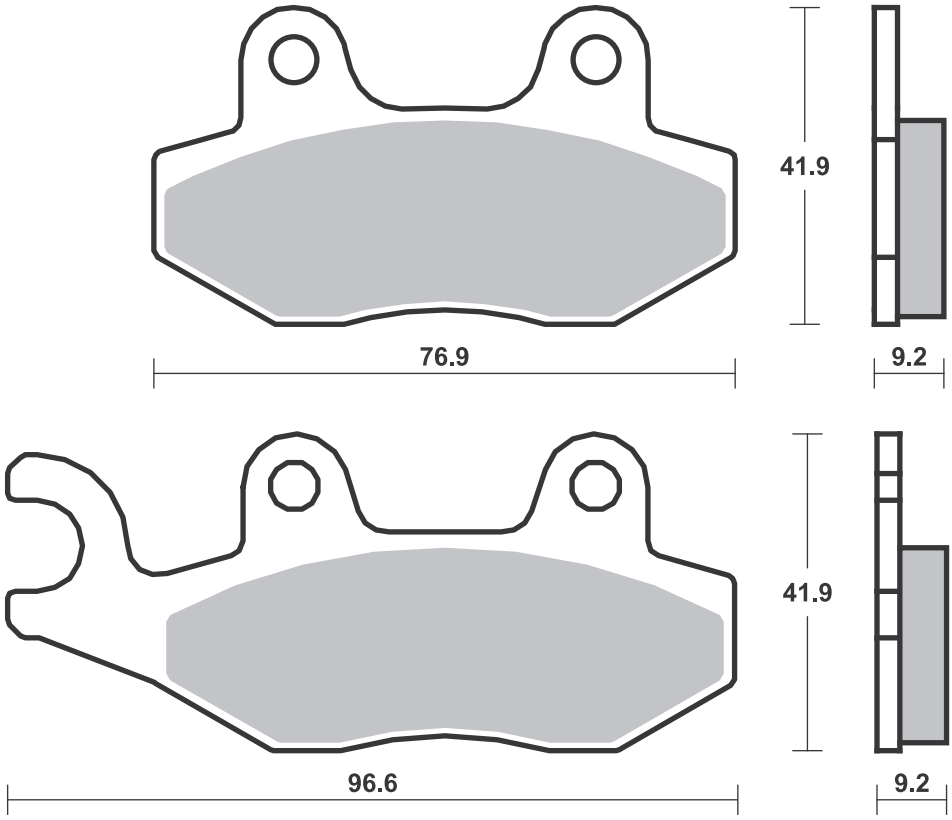

Dimensions in mm / Dimensions en mm • 1” = 25.4 mm , 1 mm = 0.04”

SBS 165 Recommended compound

YAMAHA					
CV	50	Jog, Jog ZR	01 - 06	**HF**	
	110	Mio	05 - 07	**HF**	
	110	Mio Sporty	05 - 07	**HF**	
	110	Nouvo	06 - 07	**HF**	

SBS 167 Recommended compound

DERBI					
	50	Senda DRD			
		Pro SM	05 - 11		**HF**
	125	Boulevard	03 - 07	**CT**	
	125	Senda Baja	06 - 12		**CT**
	150	Boulevard	03 - 09	**CT**	
ITALJET					
	50	Jet-Set	02 - 03	**HF**	
	100	Millennium 2T	01 - 01	**HF**	
	125	Jet-Set	02 - 03	**CT**	
	125	Millennium	00 - 03	**CT**	
	150	Jet-Set	02 - 03	**CT**	
	150	Millennium	00 - 03	**CT**	
PEUGEOT					
	50	Elystar	03 - 05		**HF**
	125	Elyseo	00 - 07		**CT**
	125	Elystar	03 - 07		**CT**
	125	Looxor	03 - 07		**CT**
	150	Elyseo	00 - 04		**CT**
	150	Elystar	03 - 04		**CT**

Available compounds **HF • CT** **SBS 165**

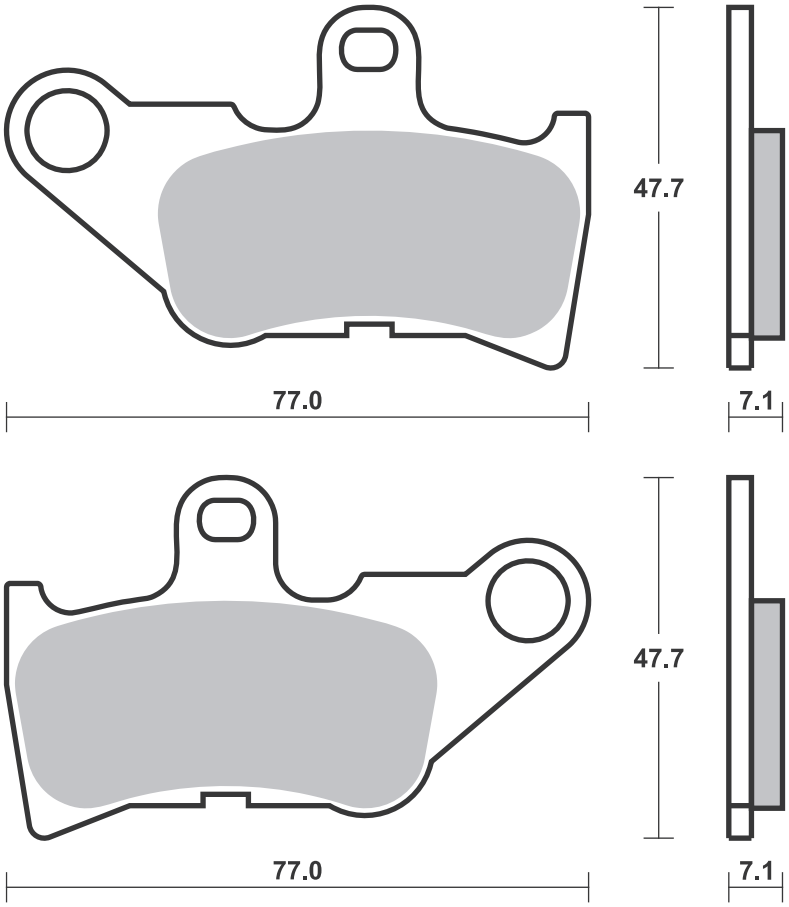

Available compounds **HF • CT** **SBS 167**

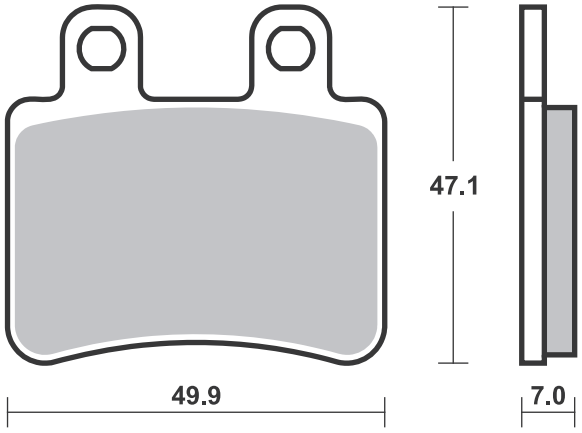

SBS 168 Recommended compound

DERBI					
	50	Black Devil	04 - 04	**HF**	
	50	DRD Racing R	05 - 10	**HF**	
	50	DRD Racing R Ltd.	05 - 05	**HF**	
	50	DRD Racing SM	05 - 05	**HF**	
	50	DRD Racing SM Ltd.	05 - 05	**HF**	
	50	Senda SM DRD Black Edition	03 - 04	**HF**	
	125	Senda Baja	06 - 12	**HF**	
PEUGEOT					
	125	Elyseo	00 - 07	**CT**	
	125	Elystar	03 - 07	**CT**	
	150	Elyseo	00 - 04	**CT**	
	150	Elystar	03 - 04	**CT**	
YAMAHA					
TZR	50		03 - 04	**HF**	

SBS 169 Recommended compound

YAMAHA				
	250	Morphus	06 - 06	**MS**
XP	500	TMAX	01 - 03	**MS**
XP	530	TMAX	12 - 19	**MS**
XP	530	TMAX DX	17 - 19	**MS**
XP	530	TMAX Iron Max	15 - 19	**MS**
XP	530	TMAX SX	17 - 19	**MS**
	560	TMAX	20 - 20	**MS**
	560	TMAX Tech Max	20 - 20	**MS**

Available compounds **HF • CT** **SBS 168**

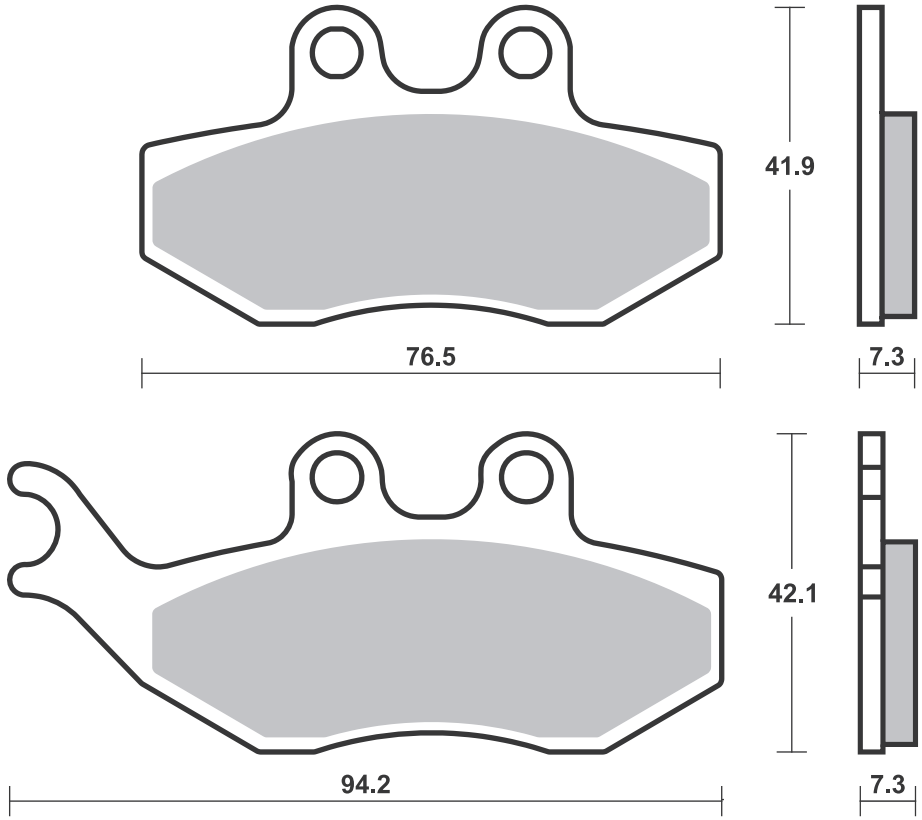

Available compounds **HF • CT • MS** **SBS 169**

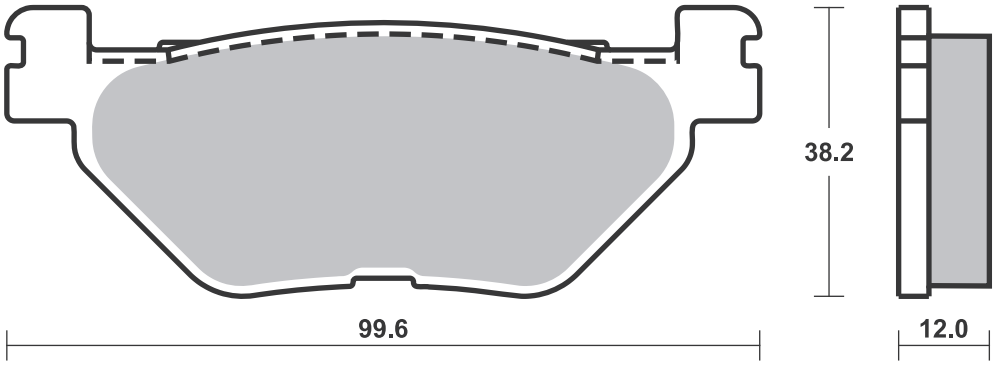

SBS 170 Recommended compound

YAMAHA					
	250	Morphus	06 - 06	**MS**	
YP	400	Majesty	04 - 04	**MS**	
XP	500	TMAX	01 - 03	**MS**	

SBS 171 Recommended compound

SYM					
	125	Voyager	05 - 05	**CT**	
	250	Joymax	07 - 10	**MS**	
	250	Voyager	05 - 05	**MS**	
RV	250	Efi	10 - 10	**MS**	
	300	Joymax Evo	10 - 12	**MS**	
	300	Joymax Sport	16 - 17	**MS**	
GTS	300		09 - 13	**MS**	

Available compounds **HF • CT • MS** **SBS 170**

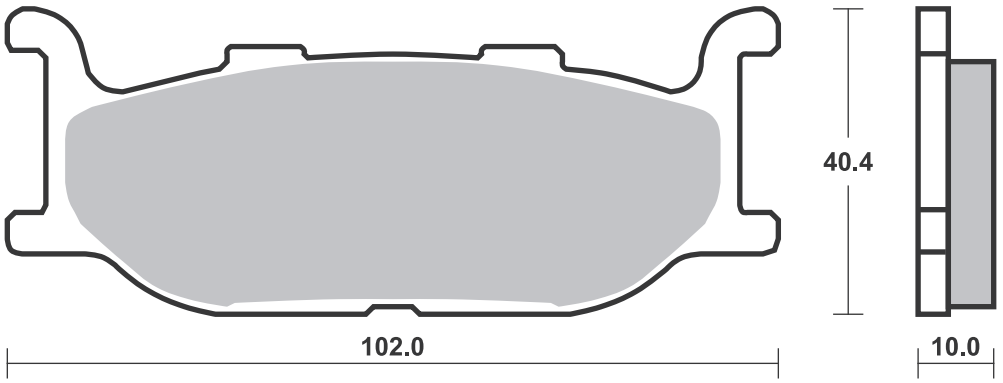

Available compounds **HF • CT • MS** **SBS 171**

1 set = 4 pcs.

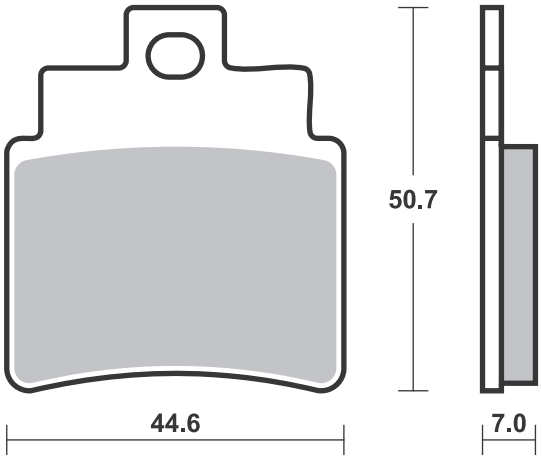

SBS 173 Recommended compound

ITALJET				
	250	Jupiter	01 - 03	**CT**
KEEWAY				
TX	50	SM	10 - 12	**HF**

SBS 174 Recommended compound

KAWASAKI				
SC	250	Epsilon	02 - 06	**MS**
SUZUKI				
AN	250	Burgman	04 - 06	**MS**
AN	400	Burgman	01 - 06	**MS**

Available compounds **HF • CT** **SBS 173**

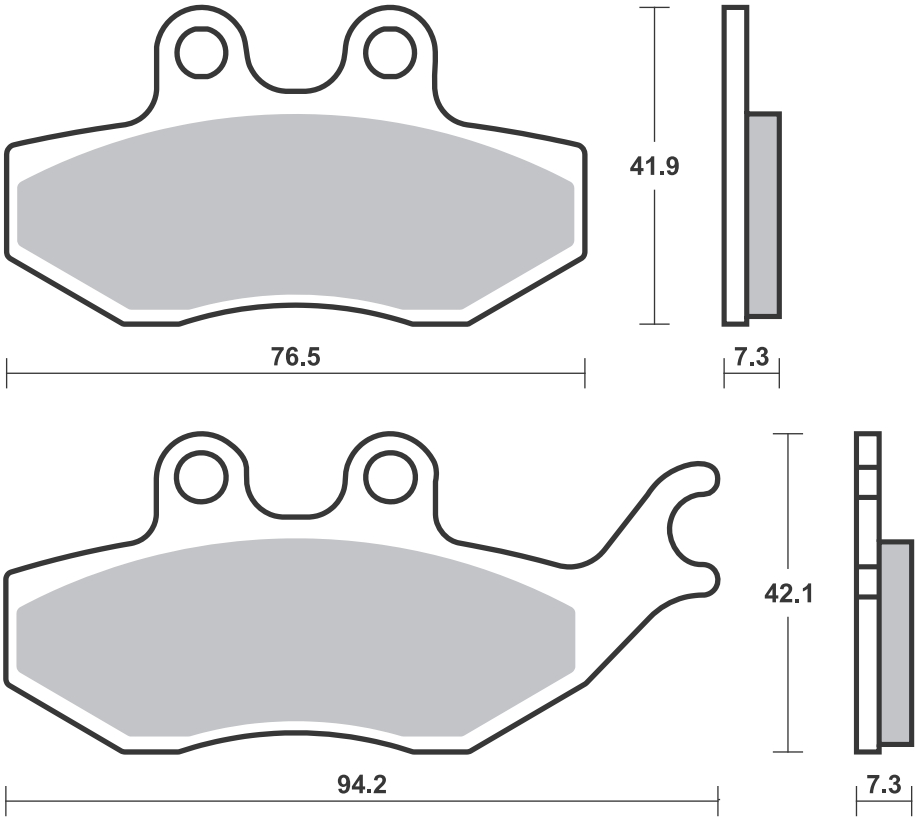

Available compounds **HF • CT • MS** **SBS 174**

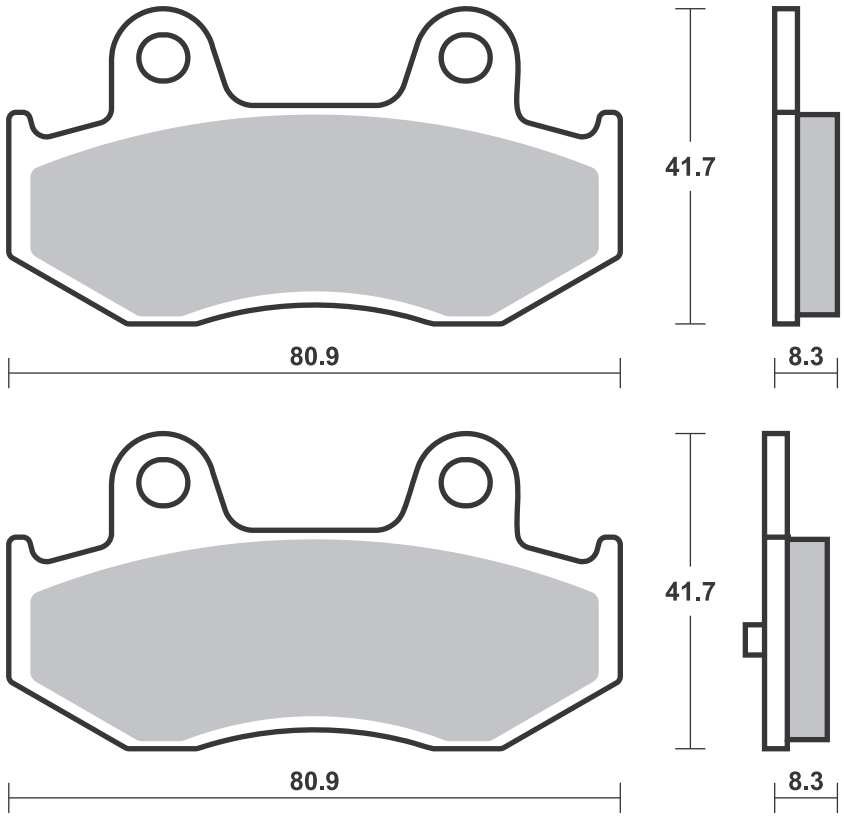

Dimensions in mm / Dimensions en mm • 1” = 25.4 mm , 1 mm = 0.04”

SBS 175 Recommended compound

BMW			
	125 C1	00 - 03	**CT**
	200 C1	02 - 04	**CT**
C	400 X	18 - 21	**MS**
YAMAHA			
XC	155 S-Max	15 - 18	**CT**

SBS 176 Recommended compound

BMW			
	125 C1	00 - 03	**CT**
	200 C1	02 - 04	**CT**

Available compounds **HF • CT • MS** **SBS 175**

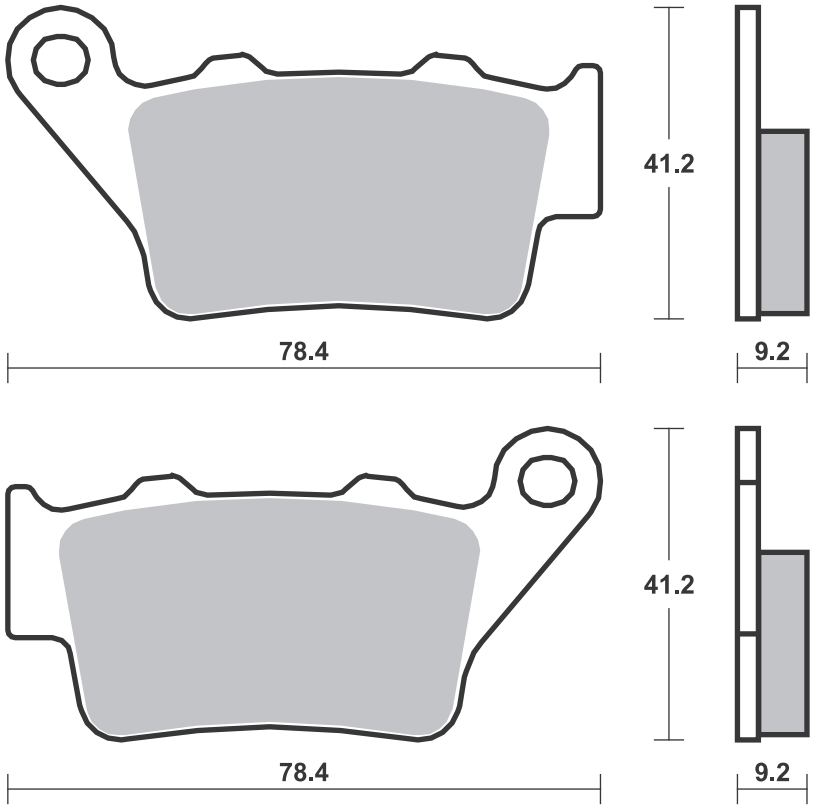

Available compounds **HF • CT • MS** **SBS 176**

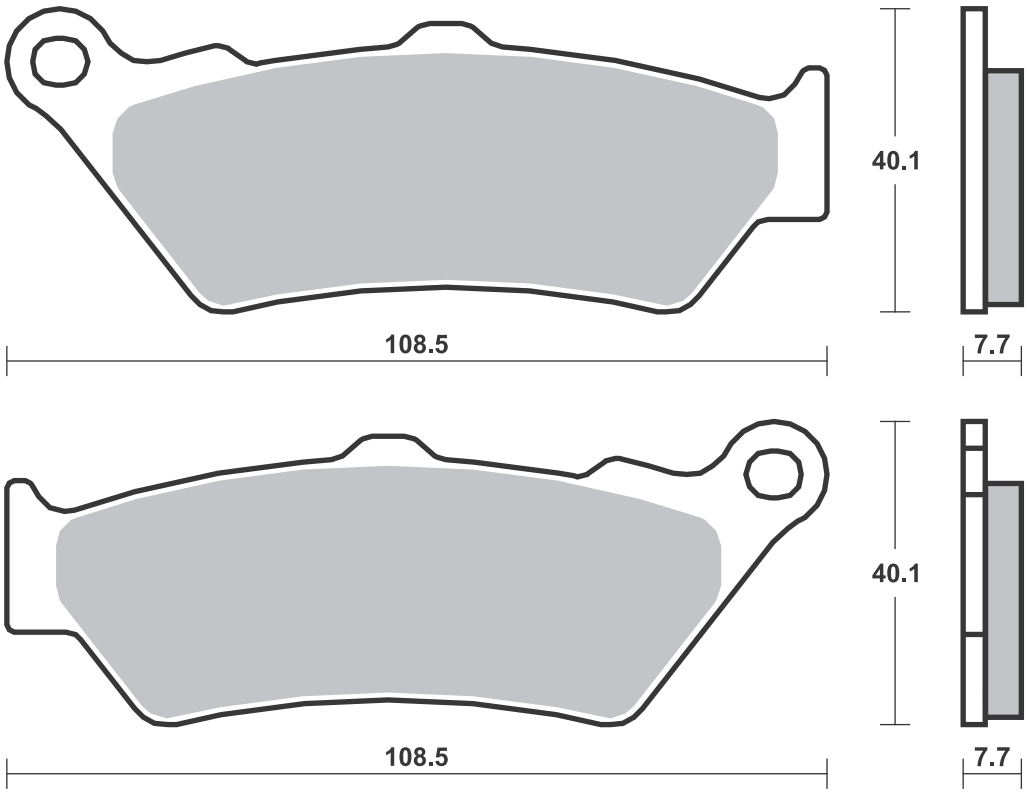

Dimensions in mm / Dimensions en mm • 1” = 25.4 mm , 1 mm = 0.04”

SBS 177 Recommended compound

APRILIA						
	50	Sport City One	08 - 12	**HF**	
SR	125	Max	12 - 17	**CT**	**CT**
SR	125	Sport City One	12 - 12	**CT**	
SR	300	Max	12 - 19	**MS**	**MS**
DERBI					
	50	Boulevard	09 - 13	**HF**	

SBS 178 Recommended compound

SYM					
RS	50		05 - 09	**HF**	
RS21	50		02 - 09	**HF**	
	125	Euro MX	03 - 04	**CT**	
	125	Joyride	01 - 09	**CT**	
	125	Joyride Evo	10 - 12	**CT**	
	125	Joyride S	16 - 17	**CT**	
RS	125		05 - 06	**CT**	
RS21	125	, R	02 - 02	**CT**	
VS	125		09 - 13	**CT**	
	150	Euro MX	03 - 06	**CT**	
	150	Joyride	01 - 06	**CT**	
RS	150		05 - 06	**CT**	
	200	Joyride	01 - 08	**CT**	
	200	Joyride S	16 - 17	**CT**	

Available compounds **HF • CT • MS** **SBS 177**

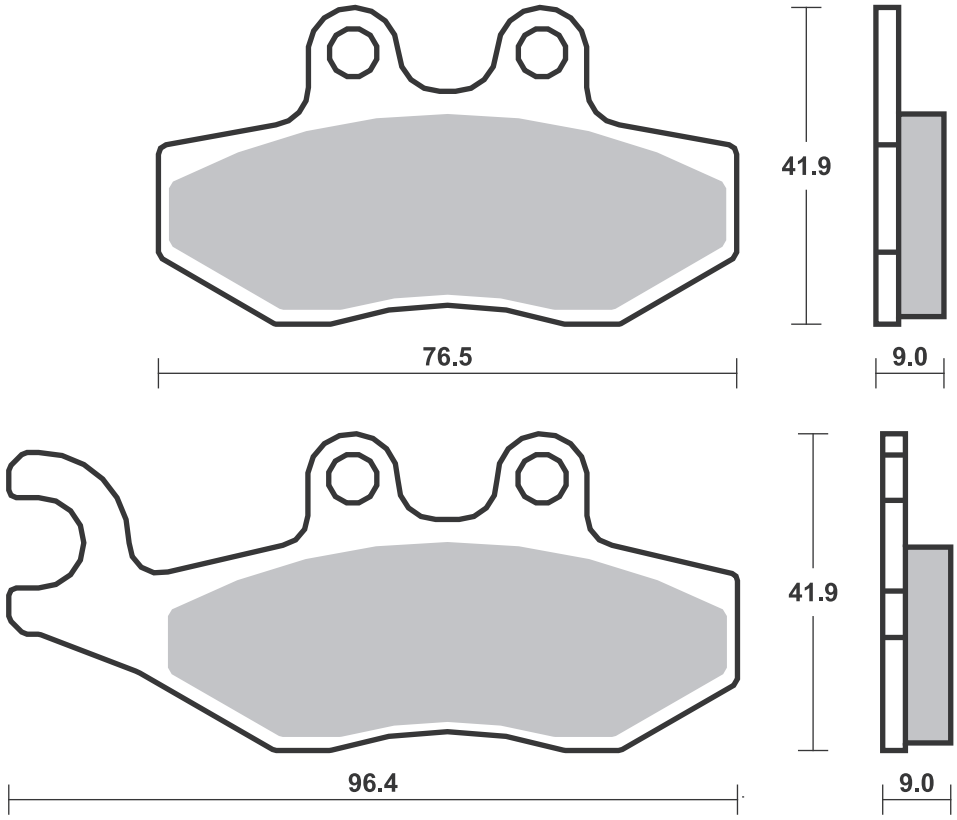

Available compounds **HF • CT** **SBS 178**

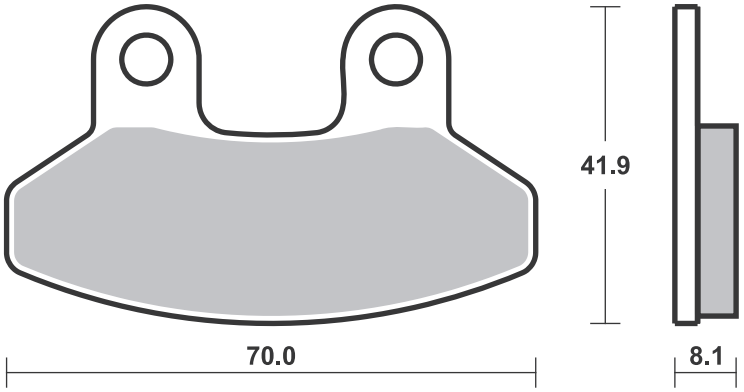

SBS 180 Recommended compound

HONDA					
ANF	125	i Innova	07 - 11	**CT**	
ANF	125	Innova	03 - 06	**CT**	

SBS 181 Recommended compound

YAMAHA					
YP	125	X-Max	10 - 18	**CT**	
YP	125	X-Max ABS	11 - 16	**CT**	
YP	125	X-Max Business ABS	11 - 13	**CT**	
YP	125	X-Max Sport Ed.	11 - 13	**CT**	
XC	155	S-Max	15 - 18	**CT**	
YP	250	X-Max	10 - 16	**MS**	
YP	400	R X-Max	13 - 16	**MS**	
YP	400	RA X-Max	14 - 16	**MS**	

Available compounds **HF • CT** **SBS 180**

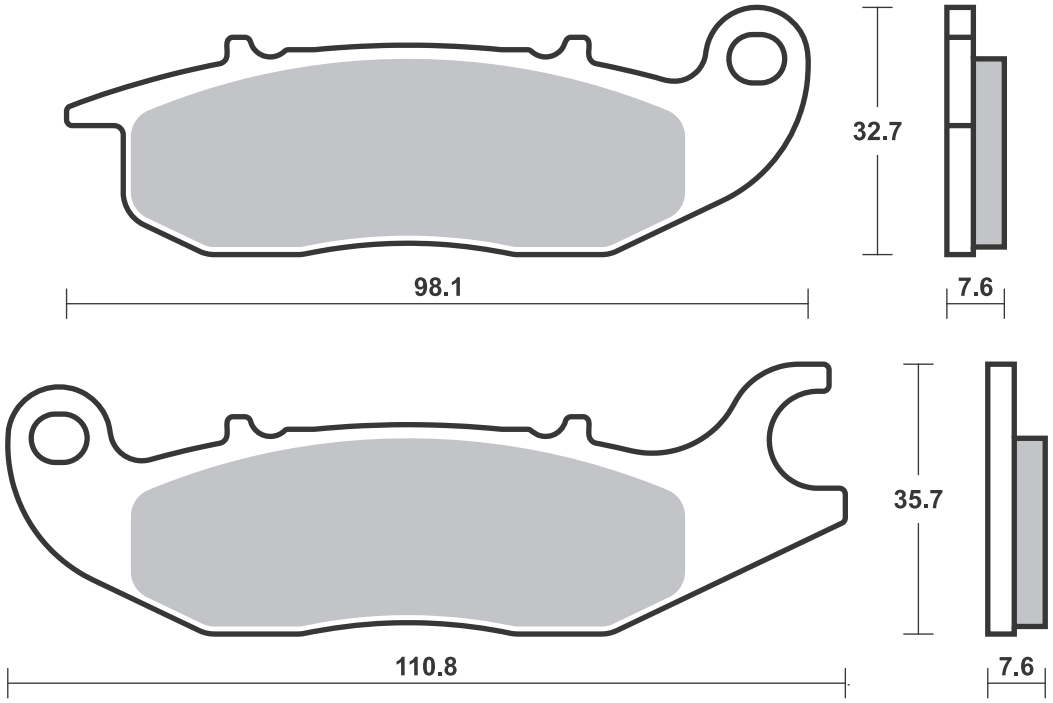

Available compounds **HF • CT • MS** **SBS 181**

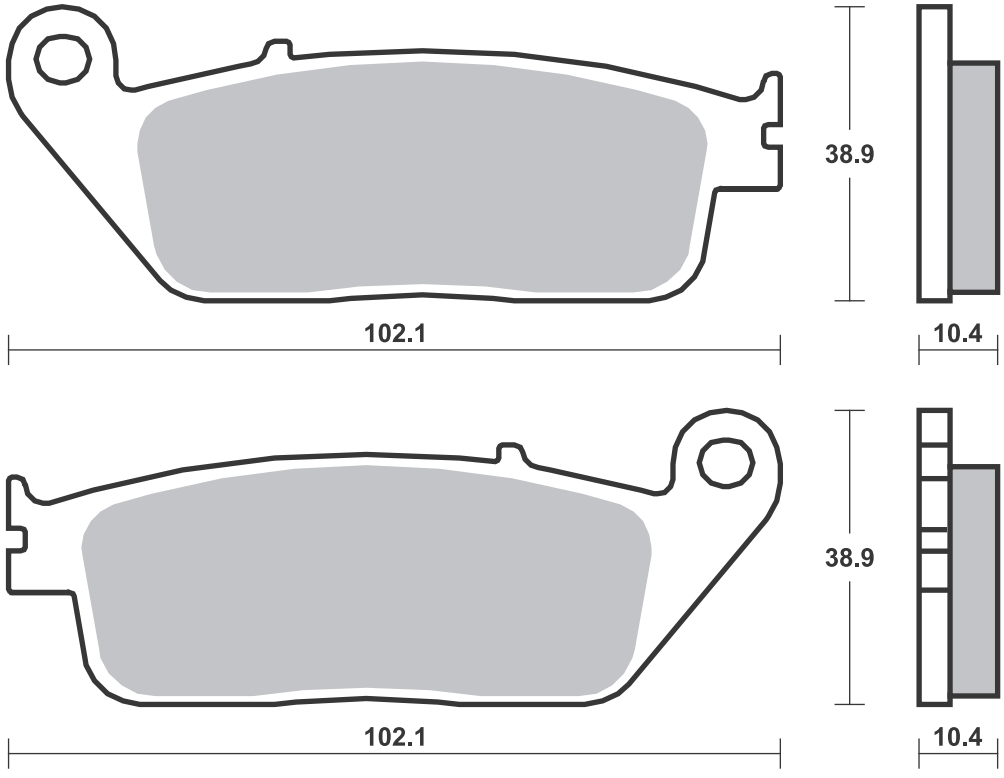

Dimensions in mm / Dimensions en mm • 1” = 25.4 mm , 1 mm = 0.04”

SBS 182 Recommended compound

SUZUKI				
AN	650	A Burgman Executive	04 - 20	**MS**
AN	650	Burgman	02 - 19	**MS**
AN	650	Z Burgman Executive	13 - 19	**MS**

SBS 183 Recommended compound

BMW				
C	600	Sport	12 - 15	**MS**
C	650	GT	12 - 21	**MS**
C	650	Sport	16 - 20	**MS**
HONDA				
NSS	125	Forza	15 - 19	**CT**
SH	125		13 - 20	**CT**
SH	150		13 - 18	**CT**
SH	300	i SH30	15 - 18	**MS**
KAWASAKI				
J	125		15 - 19	**CT**
J	300		14 - 19	**MS**
KYMCO				
	125	Downtown i	10 - 14	**CT**
	125	Super Dink	10 - 15	**CT**
	200	Downtown i	10 - 15	**CT**
	250	Xciting	04 - 09	**MS**
	250	Xciting	06 - 09	**MS**
	300	Downtown i	10 - 15	**MS**
	300	People Gti	10 - 13	**MS**
	300	Xciting Ri	08 - 14	**MS**
	500	Xciting	04 - 15	**MS**
	500	Xciting i Evo ABS	11 - 13	**MS**
	500	Xciting R ABS	09 - 13	**MS**

SUZUKI				
AN	650	A Burgman Executive	04 - 20	**MS**
AN	650	Burgman	02 - 19	**MS**
AN	650	Z Burgman Executive	13 - 19	**MS**

Available compounds **HF • CT • MS** **SBS 182**

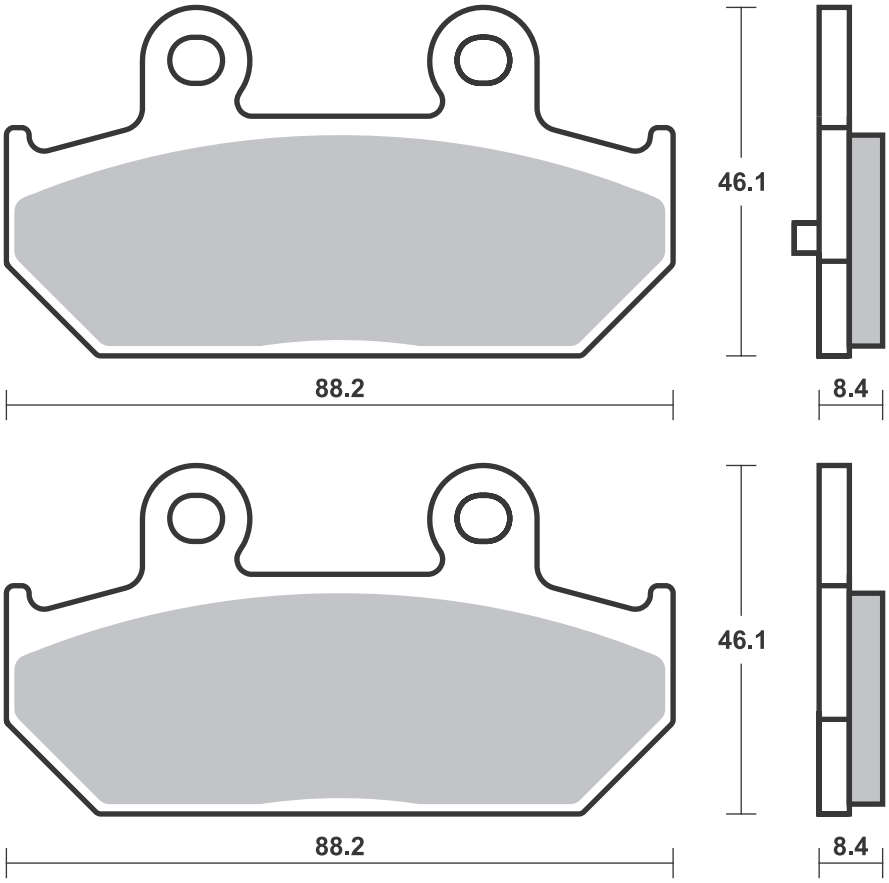

Available compounds **HF • CT • MS** **SBS 183**

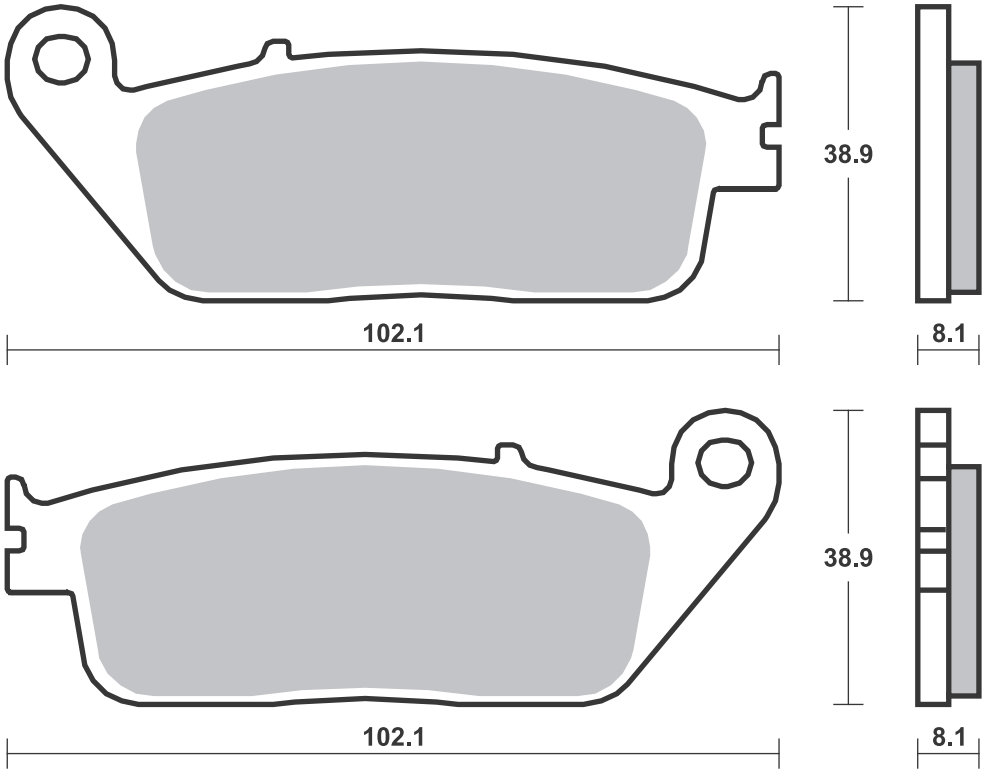

SBS 184 Recommended compound

HONDA				
FJS	400	Silverwing	06 - 08	**MS**
SW-T	400		09 - 13	**MS**
SW-T	400	ABS	09 - 14	**MS**
FSC	600	Silverwing	01 - 18	**MS**
SW-T	600		11 - 13	**MS**

SBS 185 Recommended compound

YAMAHA				
YP	400	Majesty	04 - 13	**MS**
XP	500	TMAX	04 - 11	**MS**
XP	500	TMAX Tech Max	11 - 11	**MS**

Available compounds **MS** **SBS 184**

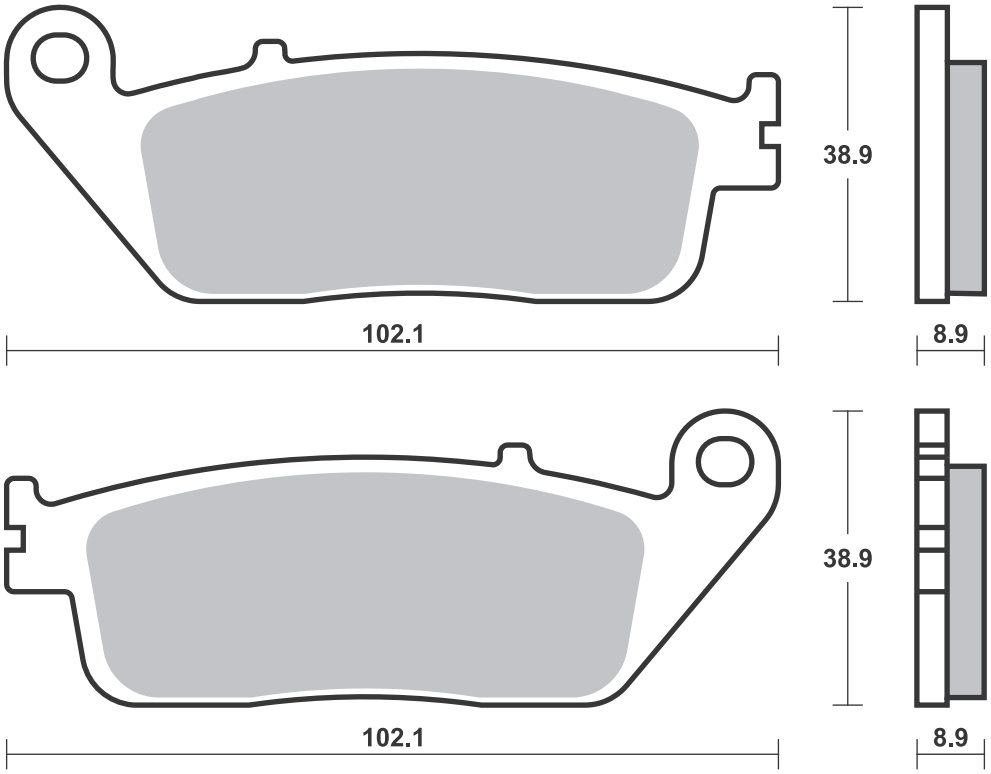

Available compounds **HF • CT • MS** **SBS 185**

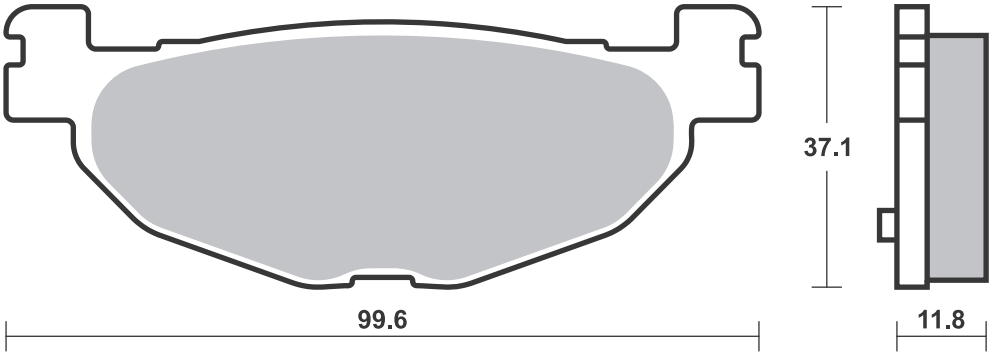

SBS 187 Recommended compound

PIAGGIO VESPA			
125	Medley	16 - 19	**CT**
125	Medley S	17 - 19	**CT**
125	MP3 Efi	08 - 11	**CT**
125	MP3 Hybrid	09 - 12	**CT**
125	MP3 Yourban	11 - 12	**CT**
150	Medley	16 - 19	**CT**
250	MP3 Efi	08 - 09	**MS**
250	MP3 LT iE	09 - 09	**MS**
300	MP3 Hybrid	11 - 12	**MS**
300	MP3 Hybrid iE	11 - 19	**MS**
300	MP3 iE	10 - 19	**MS**
300	MP3 LT	13 - 19	**MS**
300	MP3 LT Business	13 - 19	**MS**
300	MP3 LT iE ABS	14 - 19	**MS**
300	MP3 LT Sport ABS	14 - 19	**MS**
300	MP3 LT Touring	11 - 12	**MS**
300	MP3 Touring	11 - 12	**MS**
300	MP3 Yourban iE	11 - 19	**MS**

SBS 188 Recommended compound

BETA			
50	AJP Caliper incl. pin/spring	90 - 19	**HF**
CAGIVA			
50	AJP Caliper incl. pin/spring	90 - 19	**HF**
DERBI			
50	AJP Caliper incl. pin/spring	90 - 19	**HF**
GILERA			
50	AJP Caliper incl. pin/spring	90 - 19	**HF**
ITALJET			
50	AJP Caliper incl. pin/spring	90 - 19	**HF**
MALAGUTI			
50	AJP Caliper incl. pin/spring	91 - 19	**HF**
SHERCO			
50	AJP Caliper incl. pin/spring	91 - 19	**HF**

SUZUKI			
50	AJP Caliper incl. pin/spring	91 - 19	**HF**
YAMAHA			
50	AJP Caliper incl. pin/spring	91 - 19	**HF**

Available compounds **HF • CT • MS** **SBS 187**

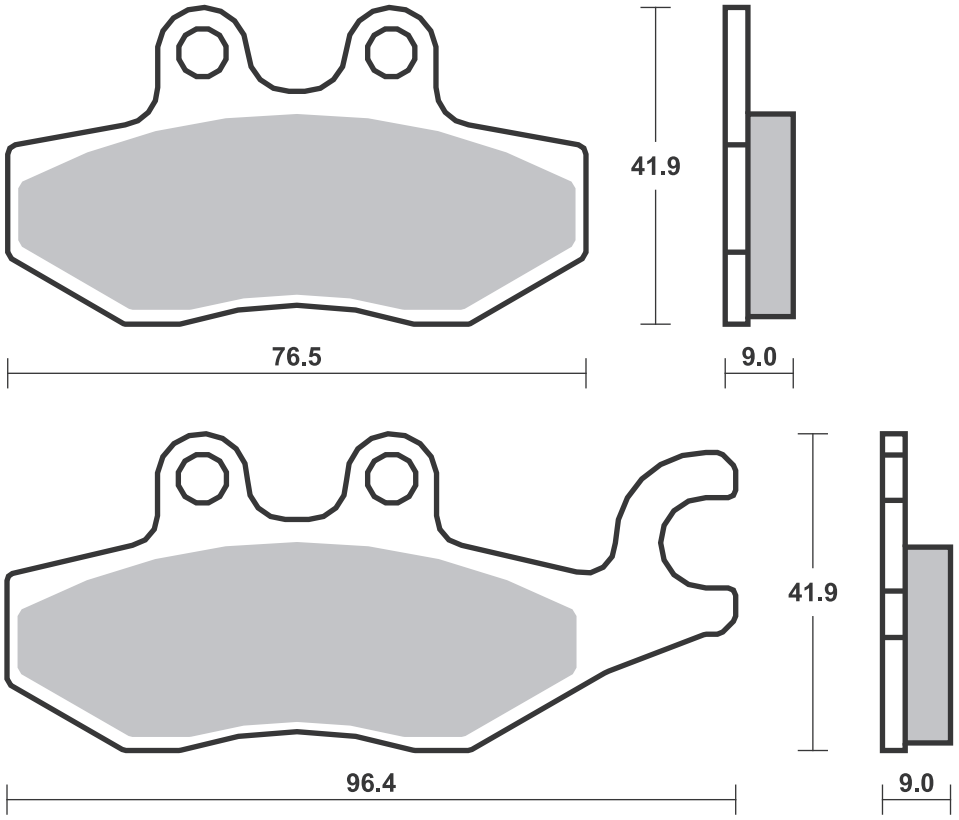

Available compounds **HF** **SBS 188**

If required without springs - see SBS 105

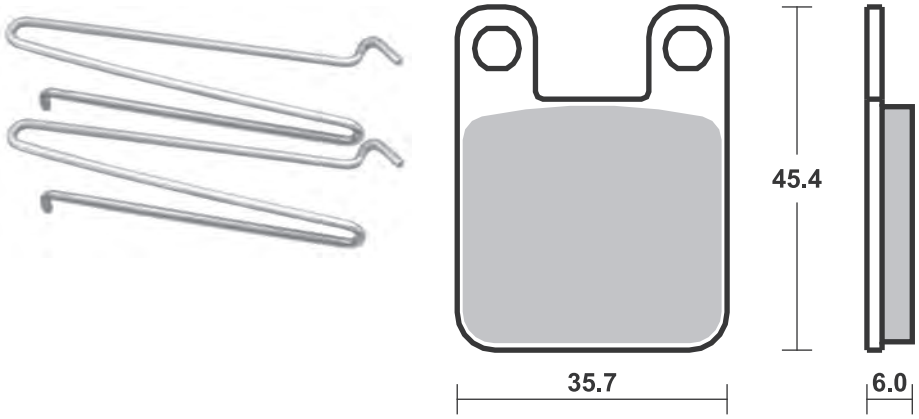

SBS 189 Recommended compound

APRILIA				
RS-4	50		12 - 19	**MS**
RS-4	50	Replica	16 - 17	**MS**
DERBI				
	50	DRD Pro corse	06 - 08	**MS**
GPX1	50		06 - 06	**MS**

SBS 190 Recommended compound

YAMAHA				
NXC	125	Cygnus X	05 - 09	**CT**

SBS 191 Recommended compound

PIAGGIO VESPA				
	125	MP3	06 - 07	**CT**
	250	MP3	06 - 07	**MS**

Available compounds **HF • MS** **SBS 189**

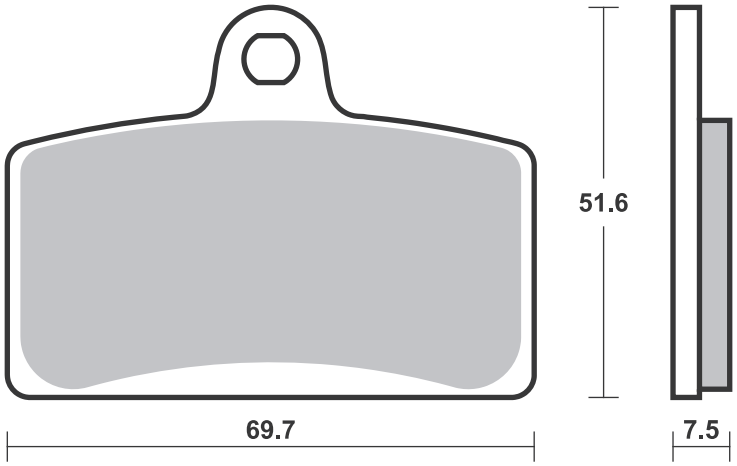

Available compounds **HF • CT • MS** **SBS 190**

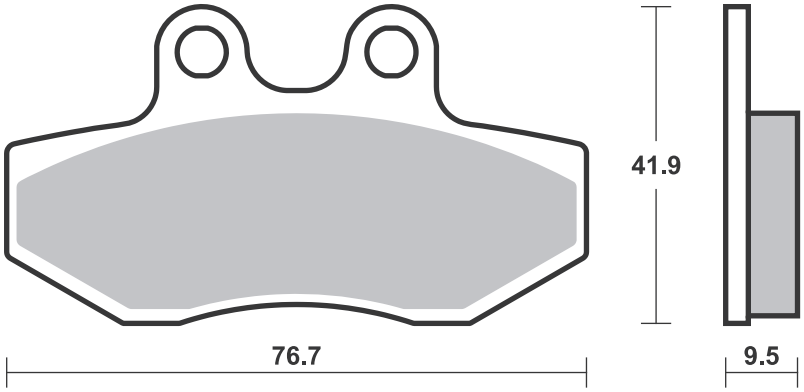

Available compounds **HF • CT • MS** **SBS 191**

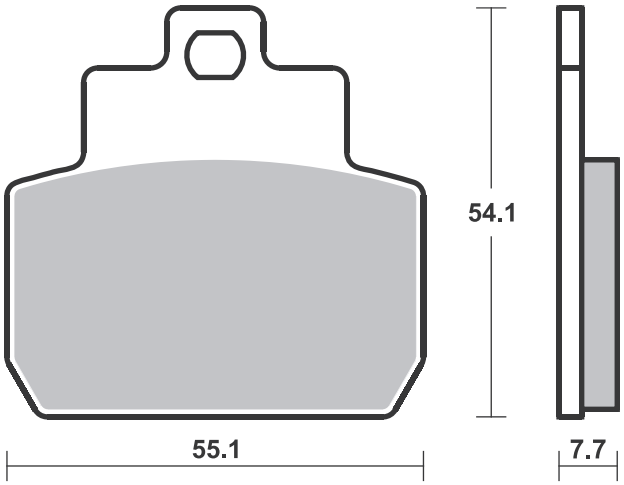

Dimensions in mm / Dimensions en mm • 1” = 25.4 mm , 1 mm = 0.04”

SBS 192 Recommended compound

				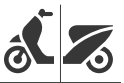	
HONDA					
SH	125	i	09 - 12	**HF**	
SH	150	i	09 - 12	**HF**	
PS	250		05 - 06	**MS**	
SH	300	i	07 - 19	**MS**	
SW-T	400		09 - 13	**MS**	
SW-T	400	ABS	09 - 14	**MS**	
FSC	600	Silverwing	09 - 18	**MS**	
SW-T	600		11 - 13	**MS**	
SUZUKI					
UH	125	Burgman	07 - 14	**CT**	
UH	200		07 - 07	**CT**	
UH	200	Burgman	07 - 13	**CT**	

SBS 193 Recommended compound

					
HONDA					
NSS	125	Forza	15 - 19		**CT**
SH	125		13 - 20		**HF**
SH	125	i	09 - 12		**HF**
SH	150		13 - 18		**HF**
SH	150	i	09 - 12		**HF**
SH	300	i	07 - 19		**HF**
SH	300	i SH30	15 - 18		**MS**

Available compounds **HF • CT • MS** **SBS 192**

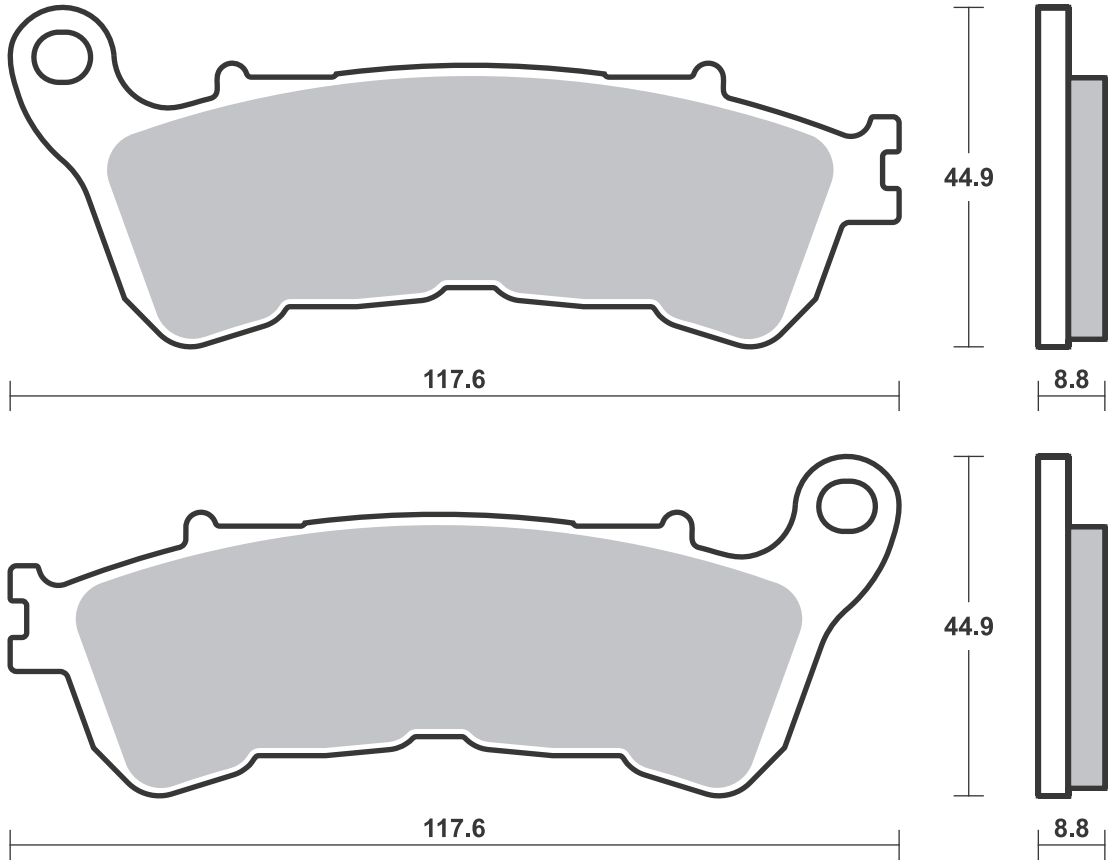

Available compounds **HF • CT • MS** **SBS 193**

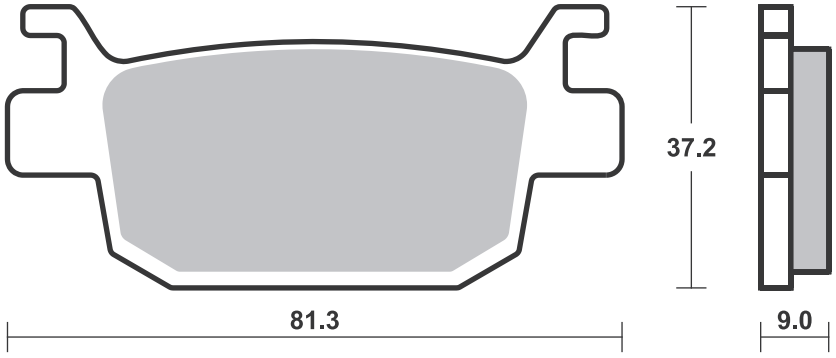

SBS 194 Recommended compound

YAMAHA				
YP	125	X-Max	06 - 09	**CT**
YP	250	X-Max	05 - 09	**MS**

SBS 195 Recommended compound

KYMCO				
S	125	People	05 - 08	**CT**
S	200	People	05 - 07	**CT**
	250	Xciting	06 - 09	**MS**
	300	Xciting Ri	08 - 14	**MS**
YAMAHA				
YP	400	R X-Max	13 - 16	**MS**
YP	400	RA X-Max	14 - 16	**MS**

Available compounds **HF • CT • MS** **SBS 194**

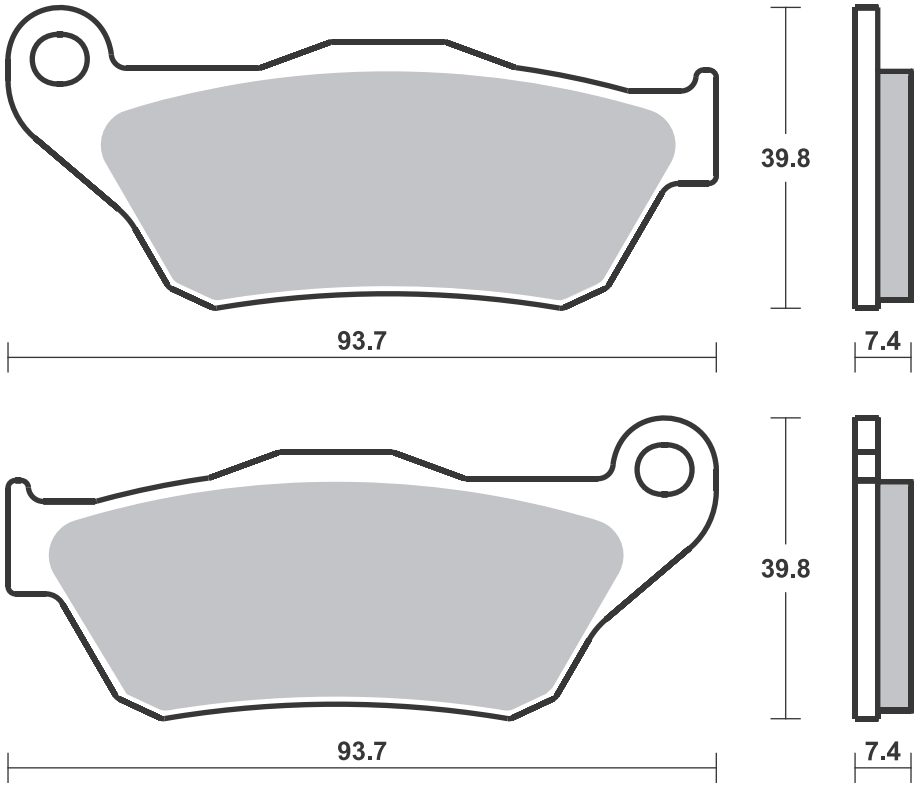

Available compounds **HF • CT • MS** **SBS 195**

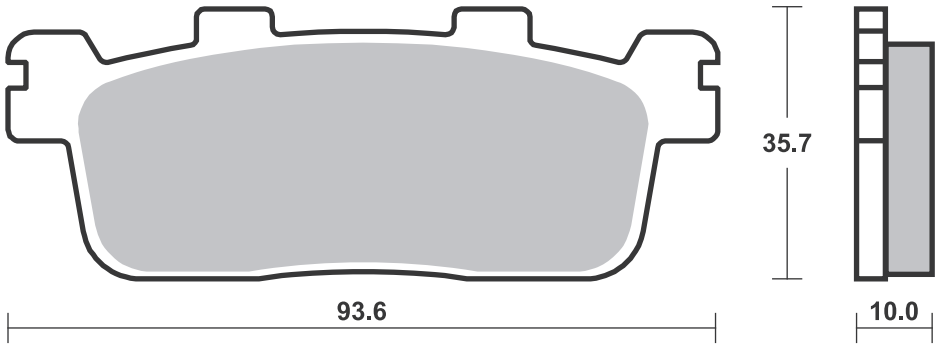

SBS 196 Recommended compound

SUZUKI				
UH	125	Burgman	07 - 19	**CT**
UH	200	Burgman	07 - 18	**CT**

SBS 197 Recommended compound

APRILIA				
SX	50	Ltd.	07 - 15	**CT**
PEUGEOT				
	125	Vivacity	10 - 16	**CT**

Available compounds **HF • CT • MS** **SBS 196**

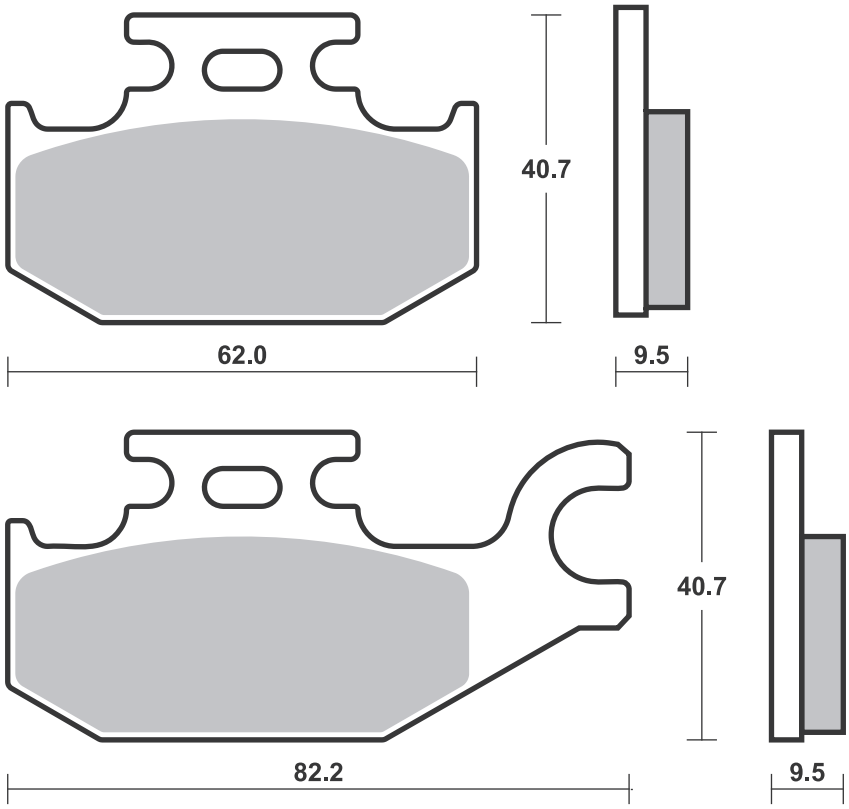

Available compounds **HF • CT • MS** **SBS 197**

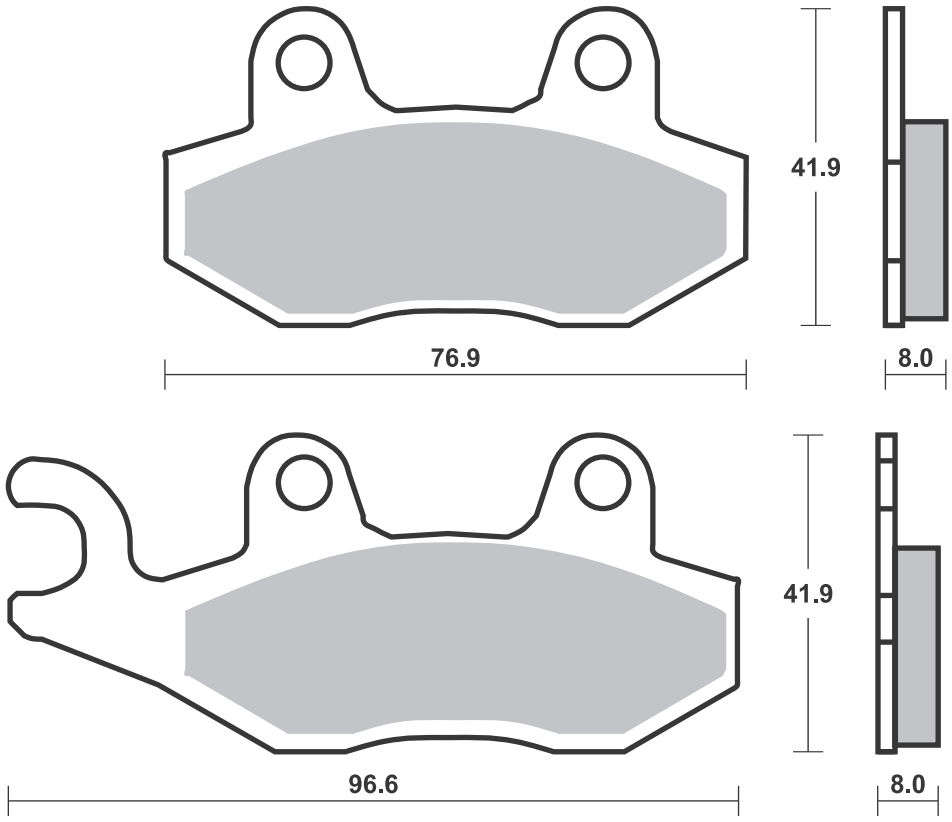

Dimensions in mm / Dimensions en mm • 1” = 25.4 mm , 1 mm = 0.04”

SBS 198 Recommended compound

YAMAHA					
XP	500	TMAX	08 - 11	**MS**	
XP	500	TMAX Tech Max	11 - 11	**MS**	
XP	530	TMAX	12 - 19	**MS**	
XP	530	TMAX DX	17 - 19	**MS**	
XP	530	TMAX Iron Max	15 - 19	**MS**	
XP	530	TMAX SX	17 - 19	**MS**	
	560	TMAX	20 - 20	**MS**	
	560	TMAX Tech Max	20 - 20	**MS**	

SBS 200 Recommended compound

ITALJET					
	50	Rollercraft	08 - 12	**HF**	
	125	Torpedo	08 - 11	**CT**	
	150	Torpedo	08 - 12	**CT**	
KEEWAY					
RY8	50		10 - 16		**HF**
PEUGEOT					
	50	Speedfight 3 (LC)	10 - 16	**HF**	
	50	Speedfight 3 RS (LC)	10 - 16	**HF**	
	50	Speedfight 4 (AC)	15 - 16	**HF**	
	50	Speedfight 4 (LC)	15 - 16	**HF**	
SACHS					
	50	MadAss	04 - 05	**HF**	
	50	MadAss 4T	05 - 09	**HF**	

SACHS					
	125	MadAss	09 - 09	**HF**	

SBS 201 Recommended compound

SYM					
	125	Joymax Sport	16 - 16	**CT**	
	125	Joyride	07 - 09	**CT**	
	125	Joyride Evo	10 - 12	**CT**	
	125	Joyride S	16 - 17	**CT**	
HD	125	Evo DT	10 - 10	**CT**	
HD2	125	Evo	14 - 14	**CT**	
	200	Joyride S	16 - 17	**CT**	
HD	200	Evo	07 - 13	**CT**	
HD2	200	Evo	14 - 14	**CT**	
	250	GTS	07 - 11	**MS**	
	250	Joymax	07 - 10	**MS**	
	250	Joymax Sport	16 - 17	**MS**	
RV	250	Efi	10 - 10	**MS**	
	300	Cruisym	17 - 17	**MS**	
	300	Joymax Evo	10 - 12	**MS**	
	300	Joymax Sport	16 - 17	**MS**	
	300	Joyride Evo i	10 - 10	**MS**	

SYM					
GTS	300		09 - 13		**MS**
GTS	300	Evo i	11 - 15		**MS**
TGB					
	125	X-Large	11 - 11		**CT**
	125	X-Motion	08 - 12		**CT**
	250	X-Motion	08 - 09		**CT**
	300	X-Motion	10 - 12		**CT**

Available compounds **HF • CT • MS** **SBS 198**

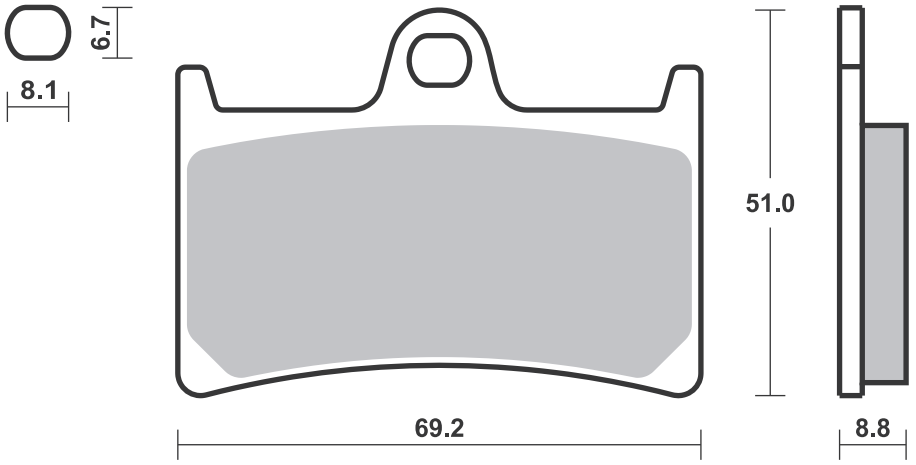

Available compounds **HF • CT** **SBS 200**

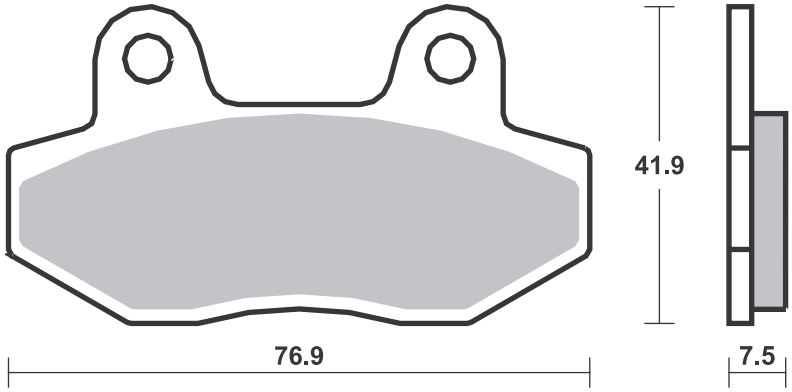

Available compounds **HF • CT • MS** **SBS 201**

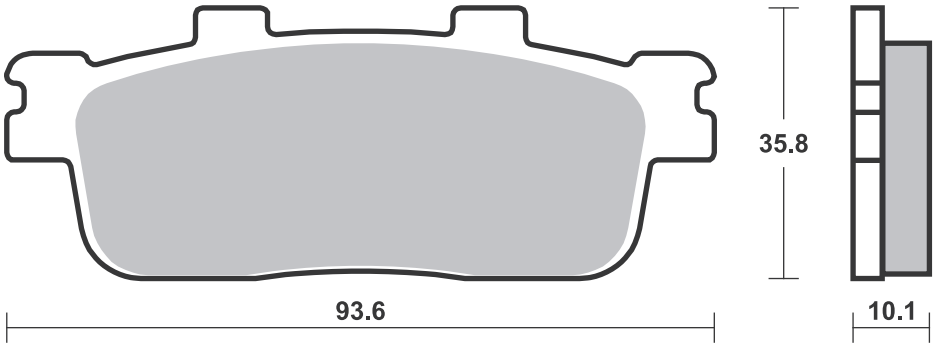

SBS 202 Recommended compound

PIAGGIO VESPA			
125	MP3	06 - 07	**CT**
125	MP3 Efi	08 - 11	**CT**
125	MP3 Hybrid	09 - 12	**CT**
125	MP3 Yourban	11 - 12	**CT**
250	MP3	06 - 07	**MS**
250	MP3 Efi	08 - 09	**MS**
250	MP3 LT iE	09 - 09	**MS**
300	MP3 Hybrid	11 - 12	**MS**
300	MP3 Hybrid iE	11 - 19	**MS**
300	MP3 iE	10 - 19	**MS**
300	MP3 LT	13 - 19	**MS**
300	MP3 LT Business	13 - 19	**MS**
300	MP3 LT Touring	11 - 12	**MS**
300	MP3 Touring	11 - 12	**MS**
300	MP3 Yourban iE	11 - 19	**MS**
400	MP3 iE	07 - 10	**MS**
400	MP3 LT iE	09 - 10	**MS**
400	MP3 LT Touring	11 - 12	**MS**
400	MP3 Touring	11 - 12	**MS**
500	MP3	10 - 10	**MS**
500	MP3 LT Touring Business	11 - 13	**MS**
500	MP3 LT Touring Sport	11 - 13	**MS**
500	MP3 Touring Business	11 - 12	**MS**
500	MP3 Touring Sport	11 - 12	**MS**

SYM			
50	Fiddle III	16 - 19	**CT**
125	Fiddle III	16 - 19	**CT**
125	Jet 14	17 - 19	**CT**
125	Symphony S	11 - 17	**CT**
125	Symphony SR	11 - 17	**CT**
125	Symphony ST	15 - 19	**CT**
150	Symphony S	11 - 15	**CT**
150	Symphony SR	11 - 15	**CT**
200	Fiddle III	16 - 19	**CT**

SBS 203 Recommended compound

DERBI			
125	Senda DRD SM	10 - 14	**HF**

TGB			
50	Bull&t RS/RR	11 - 17	**HF**
50	Bullet	10 - 12	**HF**
125	Bull&t RS/RR	11 - 14	**HF**

Available compounds **HF • CT • MS** **SBS 202**

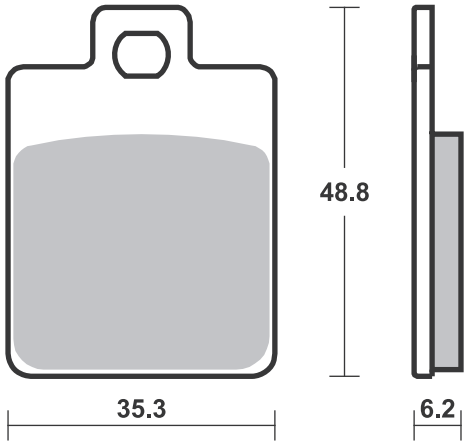

Available compounds **HF • CT** **SBS 203**

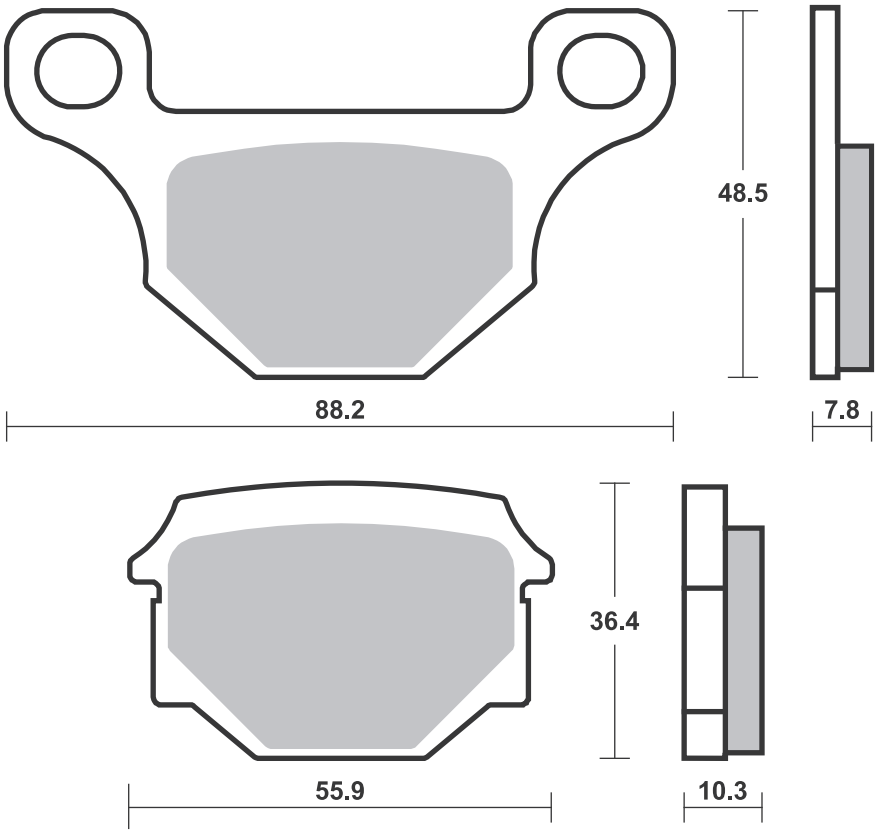

Dimensions in mm / Dimensions en mm • 1” = 25.4 mm , 1 mm = 0.04”

SBS 204 Recommended compound

KAWASAKI					
J	125		15 - 19		**CT**
J	300		14 - 19		**MS**
KYMCO					
	125	Downtown i	10 - 14		**CT**
	125	New Downtown	16 - 17		**CT**
	125	People GTi	12 - 15		**CT**
	125	Super Dink	10 - 15		**CT**
	125	X-Town CT	20 - 20		**CT**
	200	Downtown i	10 - 15		**CT**
	200	People GTi	12 - 15		**CT**
	300	Agility+	20 - 20	**MS**	**MS**
	300	Downtown i	10 - 15		**MS**
	300	People Gti	12 - 15		**MS**
	300	People S	20 - 20		**MS**
	300	X-Town CT	20 - 20		**MS**
	350	New Downtown	16 - 17		**MS**

SBS 205 Recommended compound

HONDA					
NSC	50	Vision	10 - 18	**HF**	
NSC	110	Vision	10 - 12	**HF**	
PCX	125		09 - 17	**MS**	
PCX	150		12 - 17	**MS**	
MALAGUTI					
	125	Monte	20 - 20	**CT**	

Available compounds **HF • CT • MS** **SBS 204**

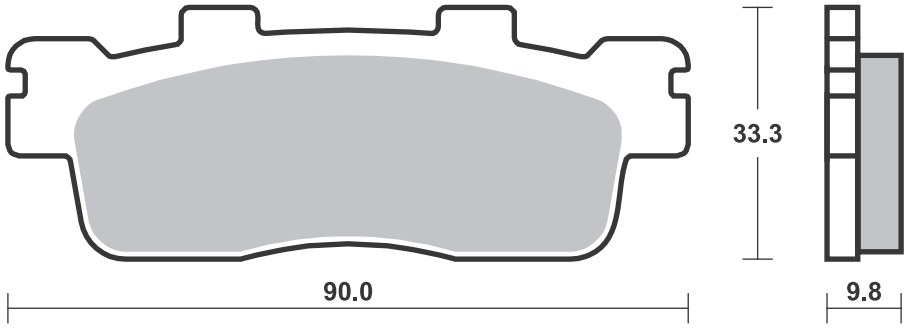

Available compounds **HF • CT • MS** **SBS 205**

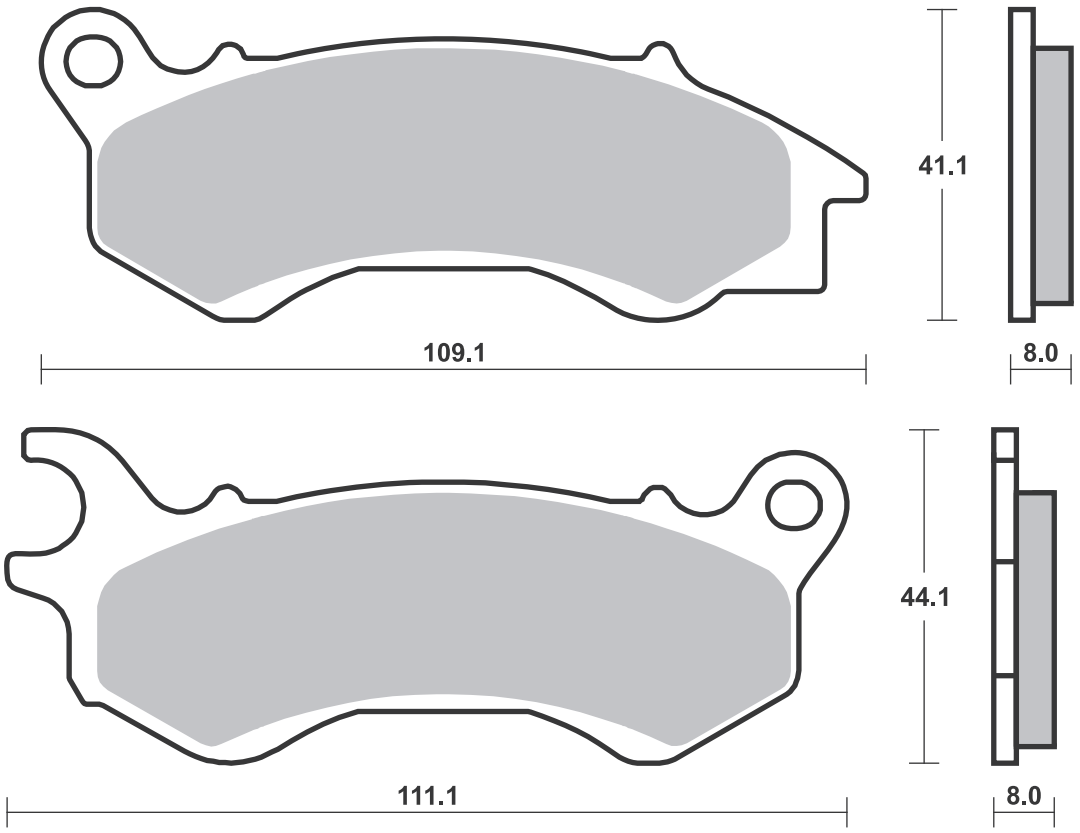

Dimensions in mm / Dimensions en mm • 1” = 25.4 mm , 1 mm = 0.04”

SBS 206 Recommended compound

YAMAHA					
CV	50	A/R Jog	03-08	**HF**	
YW	50	Zuma	12-17	**HF**	

SBS 207 Recommended compound

YAMAHA					
NXC	125	Cygnus	10-11	**CT**	

Available compounds **HF • CT** **SBS 206**

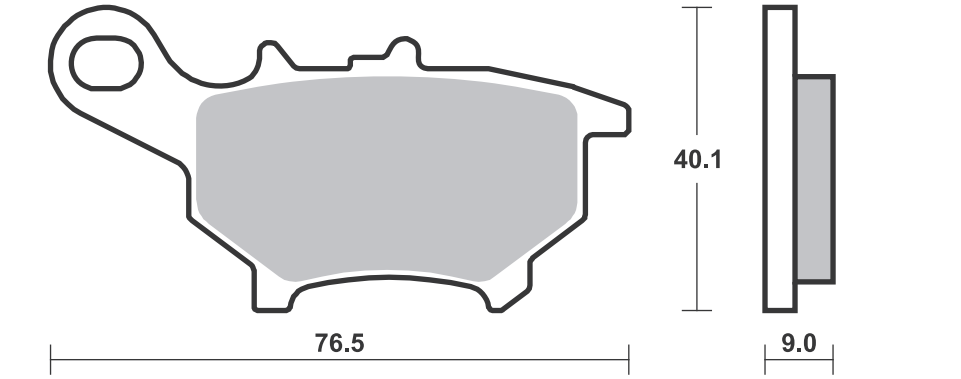

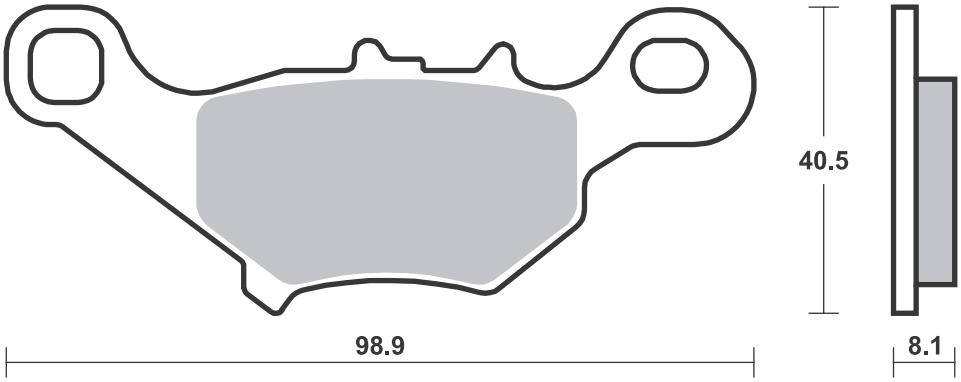

Available compounds **HF • CT** **SBS 207**

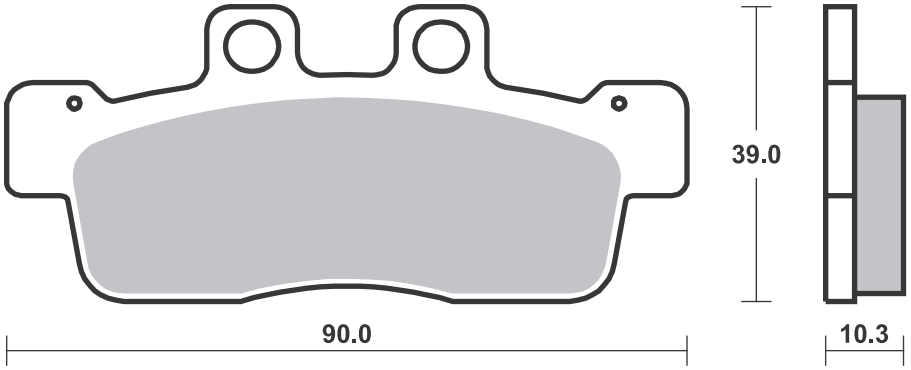

SBS 208 Recommended compound

YAMAHA					
	125	Xenter	12 - 18	**CT**	
BWs	125		10 - 11	**CT**	
YW	125	Z	10 - 11	**CT**	
YW	125	Zuma	09 - 11	**CT**	
	150	Xenter	12 - 18	**CT**	

SBS 209 Recommended compound

BMW					
C	600	Sport			
		(Parking Brake)	12 - 15	**HF**	
C	650	GT			
		(Parking Brake)	12 - 15	**HF**	
HONDA					
FJS	400	Silverwing			
		(Parking Brake)	06 - 08	**HF**	
FSC	600	Silverwing			
		(Parking Brake)	01 - 18	**HF**	
DN-01	680	(Parking Brake)	08 - 11	**HF**	
PIAGGIO VESPA					
	125	MP3			
		(Parking Brake)	06 - 07	**HF**	
	125	MP3 Efi			
		(Parking Brake)	08 - 11	**HF**	
	125	MP3 Hybrid			
		(Parking Brake)	09 - 12	**HF**	
	125	MP3 Yourban			
		(Parking Brake)	11 - 12	**HF**	
	250	MP3			
		(Parking Brake)	06 - 07	**HF**	
	250	MP3 Efi			
		(Parking Brake)	08 - 09	**HF**	
	250	MP3 LT iE			
		(Parking Brake)	09 - 09	**HF**	

PIAGGIO VESPA					
	300	MP3 Hybrid			
		(Parking Brake)	11 - 12	**HF**	
	300	MP3 Hybrid iE			
		(Parking Brake)	11 - 19	**HF**	
	300	MP3 iE			
		(Parking Brake)	10 - 19	**HF**	
	300	MP3 LT			
		(Parking Brake)	13 - 19	**HF**	
	300	MP3 LT Business			
		(Parking Brake)	13 - 19	**HF**	
	300	MP3 LT iE ABS			
		(Parking Brake)	14 - 19	**HF**	
	300	MP3 LT Sport			
		ABS			
		(Parking Brake)	14 - 19	**HF**	
	300	MP3 LT Touring			
		(Parking Brake)	11 - 12	**HF**	
	300	MP3 Touring			
		(Parking Brake)	11 - 12	**HF**	
	300	MP3 Yourban iE			
		(Parking Brake)	11 - 19	**HF**	
	400	MP3 iE			
		(Parking Brake)	07 - 10	**HF**	
	400	MP3 LT iE			
		(Parking Brake)	09 - 10	**HF**	
	400	MP3 LT Touring			
		(Parking Brake)	11 - 12	**HF**	

PIAGGIO VESPA					
	400	MP3 Touring			
		(Parking Brake)	11 - 12	**HF**	
	500	MP3			
		(Parking Brake)	10 - 10	**HF**	
	500	MP3 LT Touring			
		Business			
		(Parking Brake)	11 - 13	**HF**	
	500	MP3 LT Touring			
		Business ABS			
		(Parking Brake)	14 - 15	**HF**	
	500	MP3 LT Touring			
		Sport			
		(Parking Brake)	11 - 13	**HF**	
	500	MP3 LT Touring			
		Sport ABS			
		(Parking Brake)	14 - 15	**HF**	
	500	MP3 Touring			
		Business			
		(Parking Brake)	11 - 12	**HF**	
	500	MP3 Touring			
		Sport			
		(Parking Brake)	11 - 12	**HF**	

Available compounds **HF • CT** **SBS 208**

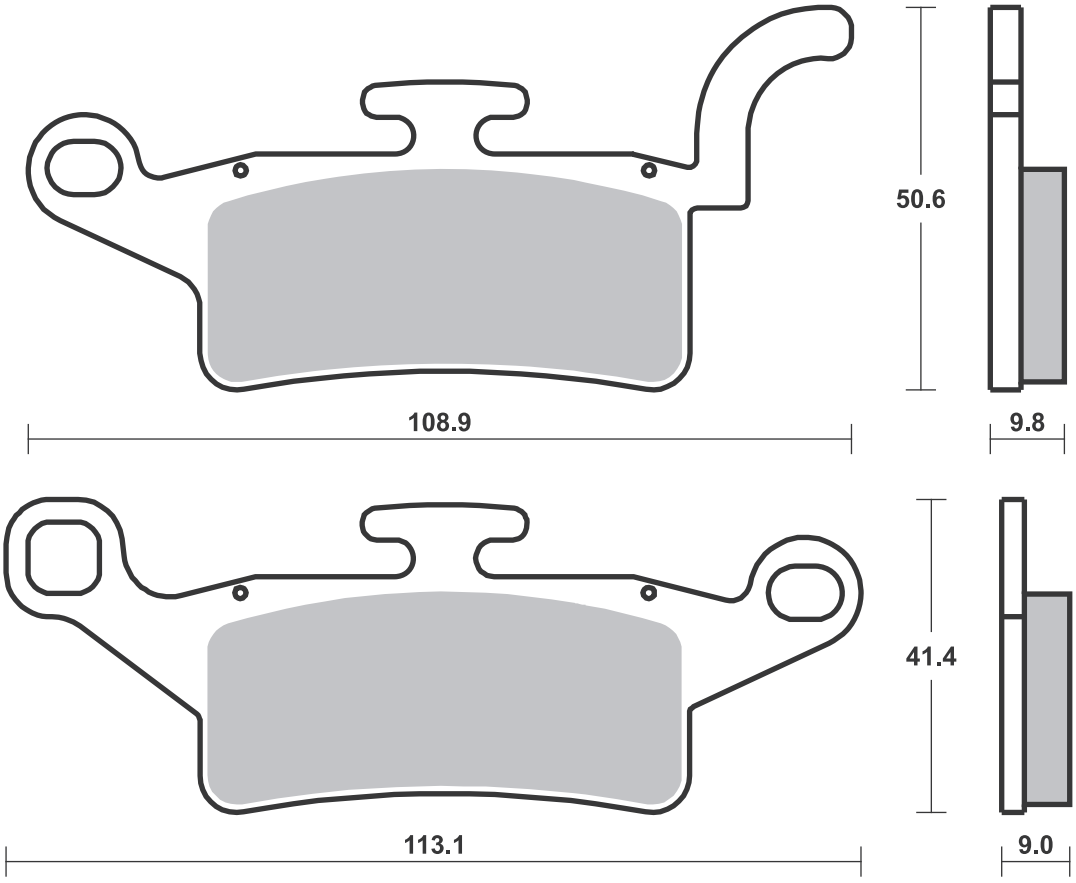

Available compounds **HF** **SBS 209**

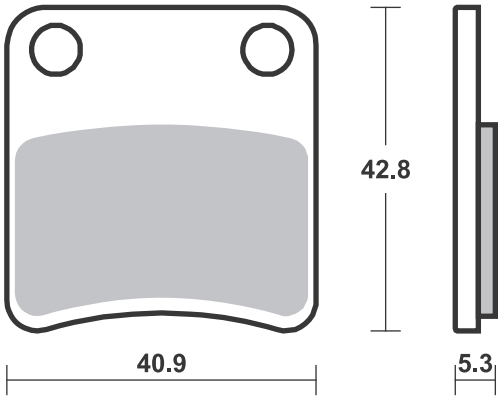

SBS 210 Recommended compound

TGB				
	125	X-Large	11 - 11	**CT**
	125	X-Motion	08 - 12	**CT**
	250	X-Motion	08 - 09	**MS**
	300	X-Motion	10 - 12	**MS**

SBS 212 Recommended compound

KYMCO				
	400	Xciting i	12 - 14	**MS**
	500	Xciting	04 - 15	**MS**
	500	Xciting i Evo ABS	11 - 13	**MS**
	500	Xciting R ABS	09 - 13	**MS**

Available compounds **HF • CT • MS** **SBS 210**

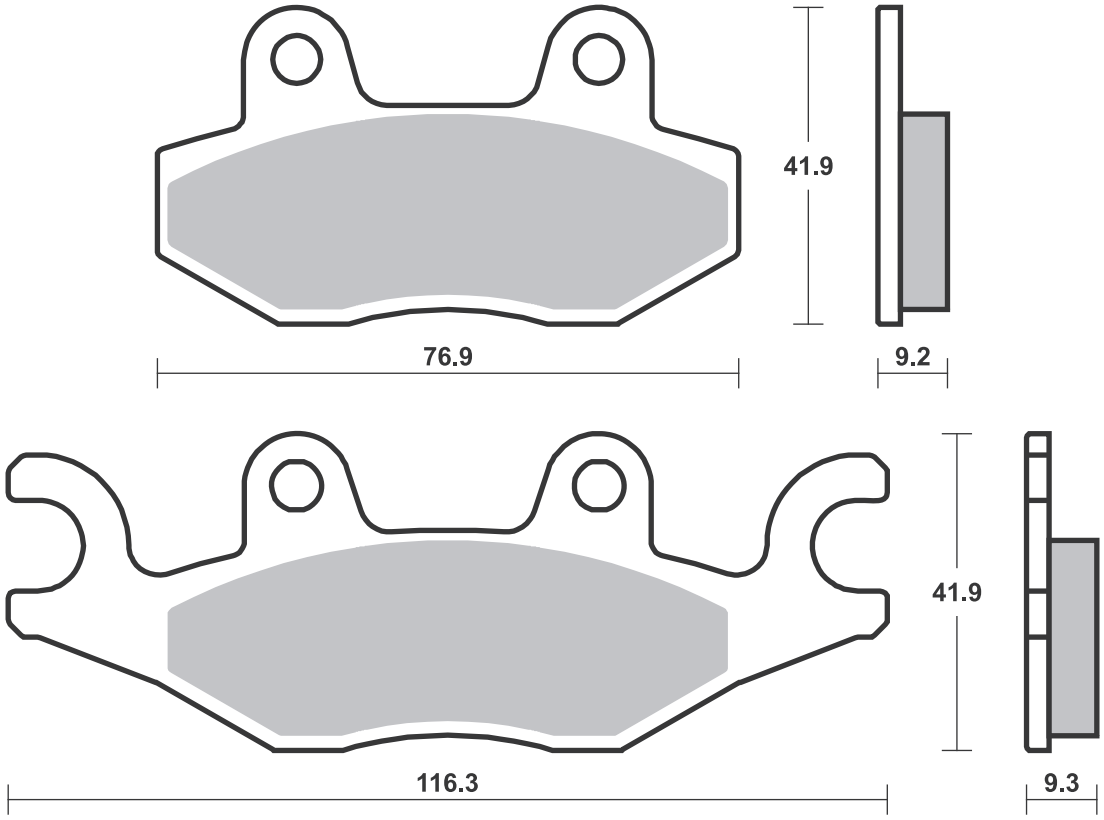

Available compounds **HF • CT • MS** **SBS 212**

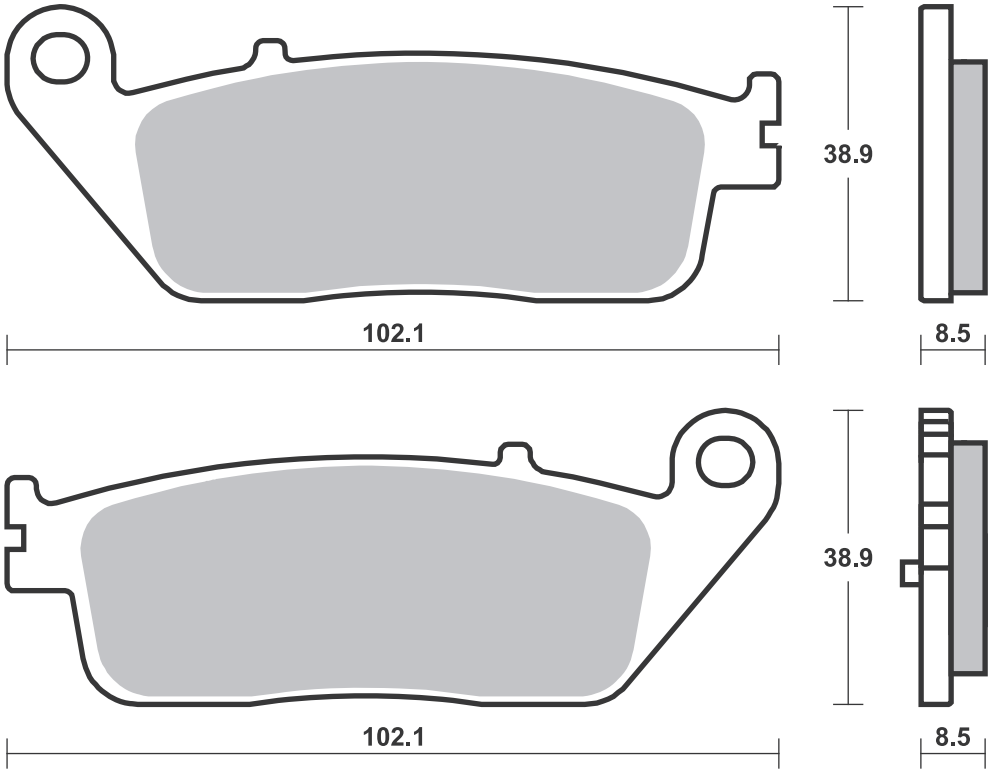

Dimensions in mm / Dimensions en mm • 1” = 25.4 mm , 1 mm = 0.04”

SBS 214 Recommended compound

KYMCO				
	400	Xciting i	12 - 14	**MS**
SYM				
	400	i Maxsym	11 - 11	**MS**

SBS 215 Recommended compound

SYM				
	300	Cruisym	17 - 17	**MS**
	400	i Maxsym	12 - 17	**MS**
	465	Maxsym TL	20 - 20	**MS**
	600	i Maxsym	14 - 19	**MS**
	600	i Maxsym Sport	18 - 19	**MS**

Available compounds **HF • CT • MS** **SBS 214**

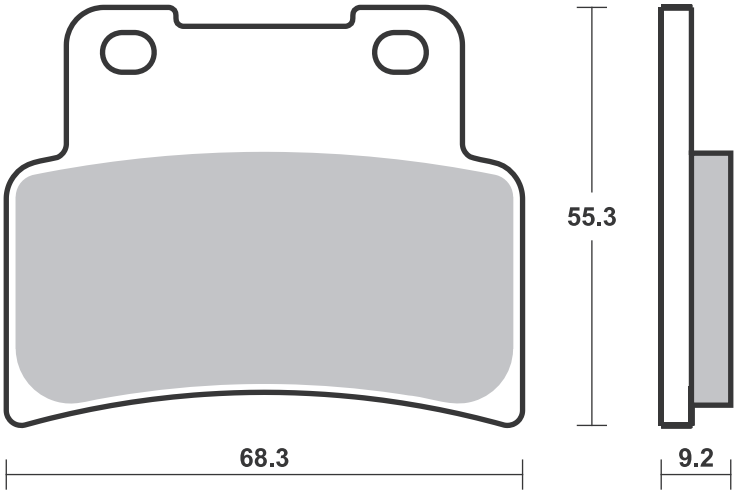

Available compounds **HF • CT • MS** **SBS 215**

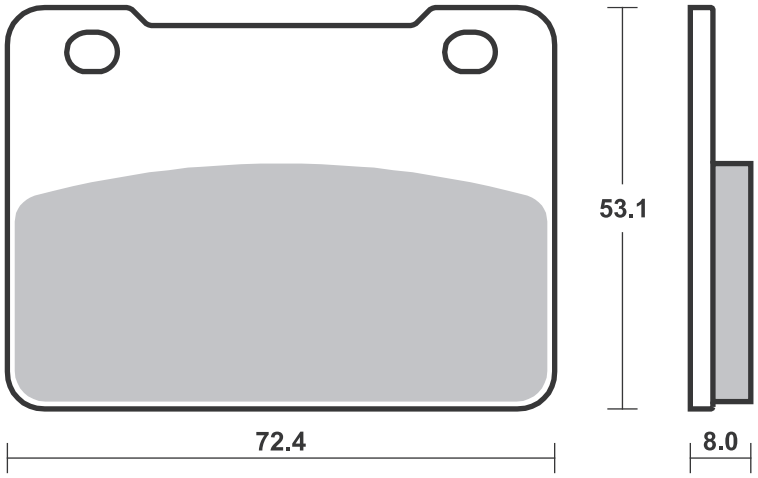

SBS 216 Recommended compound

					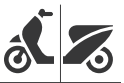
HONDA					
AFS	110	Wave	12 - 19	**HF**	
C	125	Super Cub	19 - 21	**CT**	

SBS 218 Recommended compound

					
SYM					
	400	i Maxsym	11 - 17		**MS**
	465	Maxsym TL	20 - 20		**MS**
	600	i Maxsym	14 - 19		**MS**
	600	i Maxsym Sport	18 - 19		**MS**

Available compounds **HF • CT** **SBS 216**

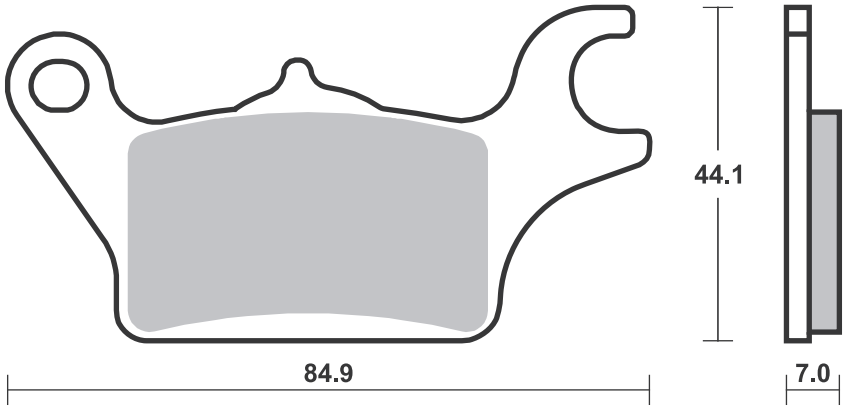

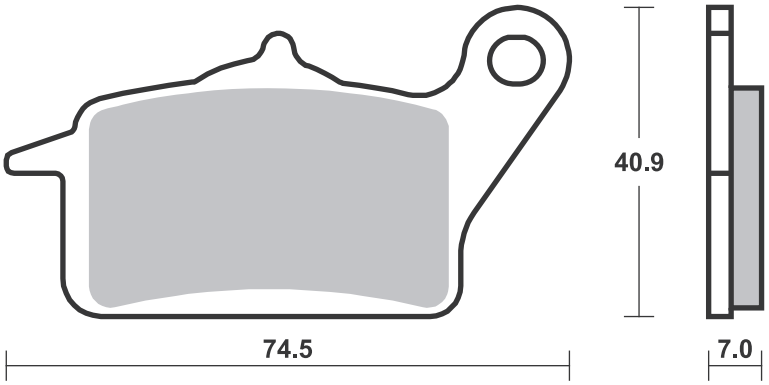

Available compounds **HF • CT • MS** **SBS 218**

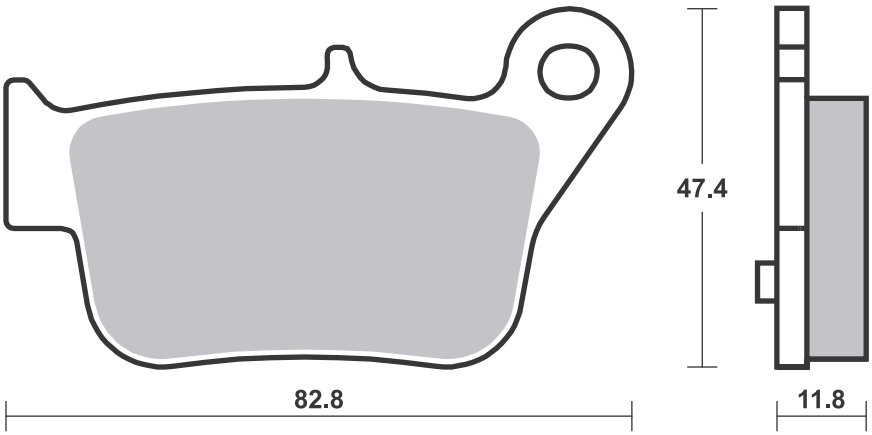

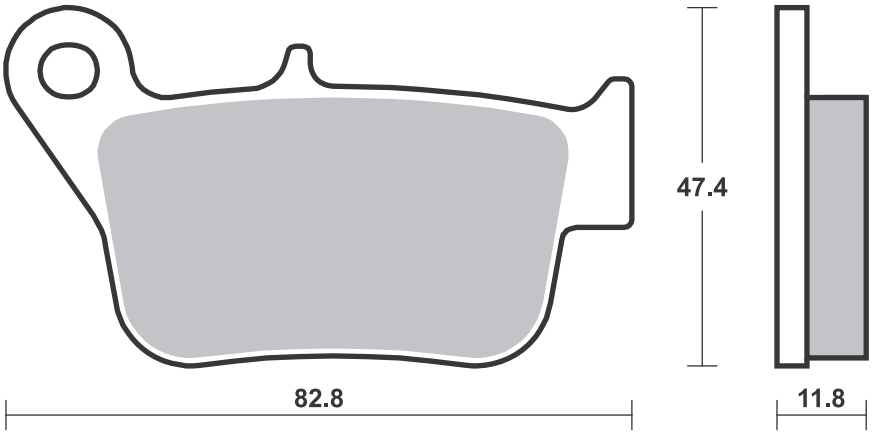

Dimensions in mm / Dimensions en mm • 1” = 25.4 mm , 1 mm = 0.04”

SBS 221 Recommended compound

YAMAHA				
YP	250	X-Max	14 - 16	**MS**

SBS 222 Recommended compound

YAMAHA				
MW	125	Tricity	14 - 19	**CT**
	300	Tricity	20 - 20	**CT**

Available compounds **HF • CT • MS** **SBS 221**

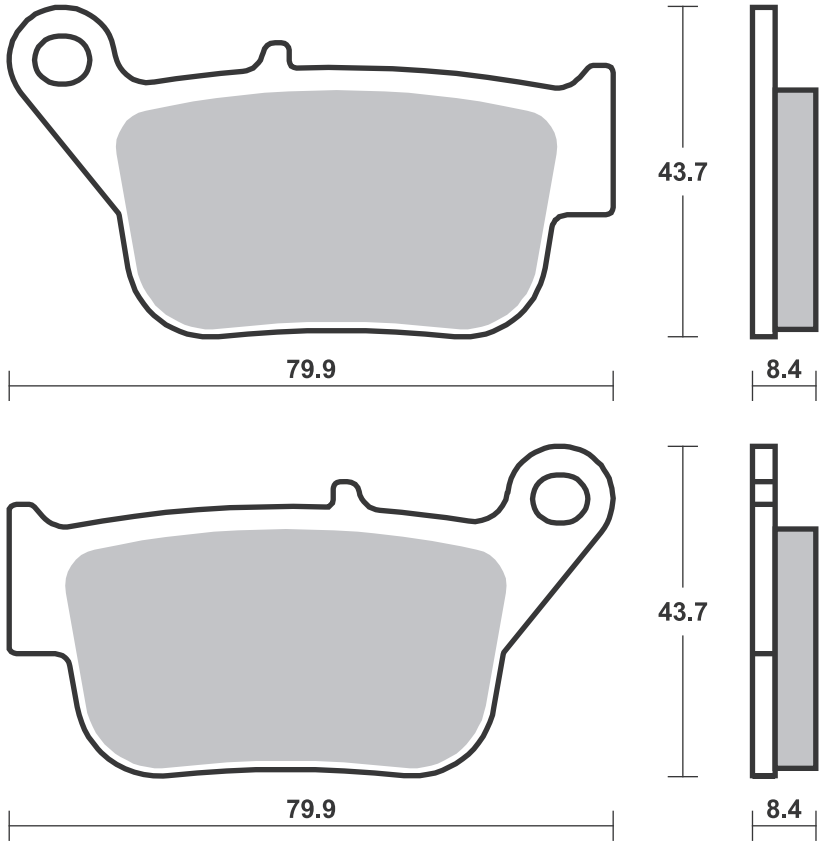

Available compounds **HF • CT** **SBS 222**

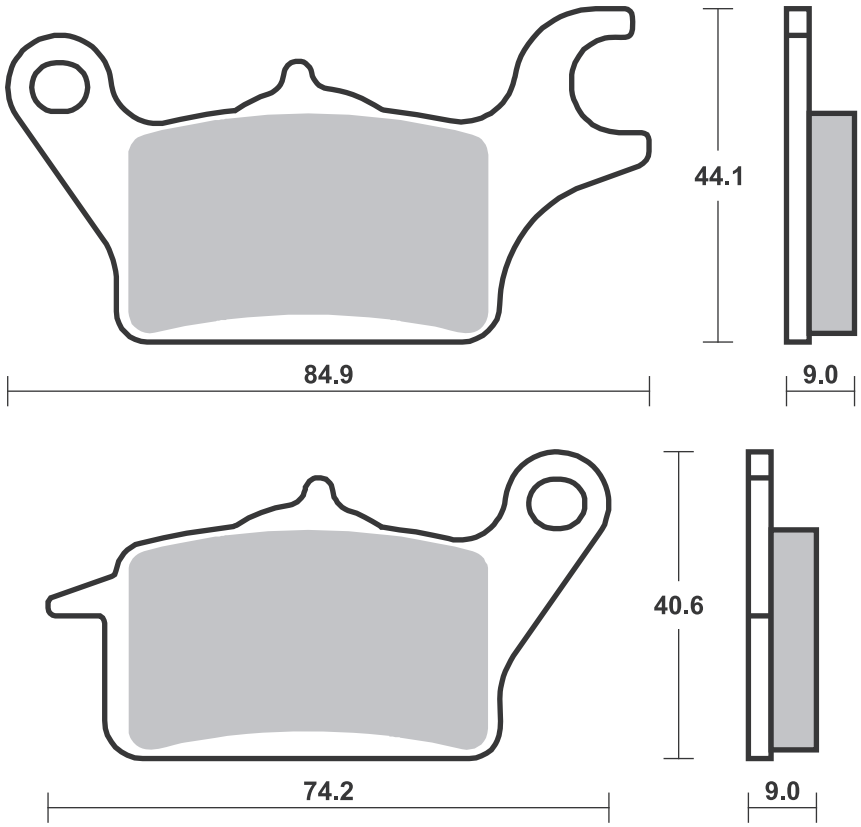

Dimensions in mm / Dimensions en mm • 1” = 25.4 mm , 1 mm = 0.04”

SBS 223 Recommended compound

YAMAHA					
MW	125	Tricity	14 - 19	**CT**	
	300	Tricity	20 - 20	**CT**	

SBS 224 Recommended compound

PIAGGIO VESPA					
	300	MP3 LT iE ABS	14 - 19	**MS**	
	300	MP3 LT Sport ABS	14 - 19	**MS**	
	500	MP3 LT Touring Business ABS	14 - 15	**MS**	
	500	MP3 LT Touring Sport ABS	14 - 15	**MS**	

Available compounds **HF • CT** **SBS 223**

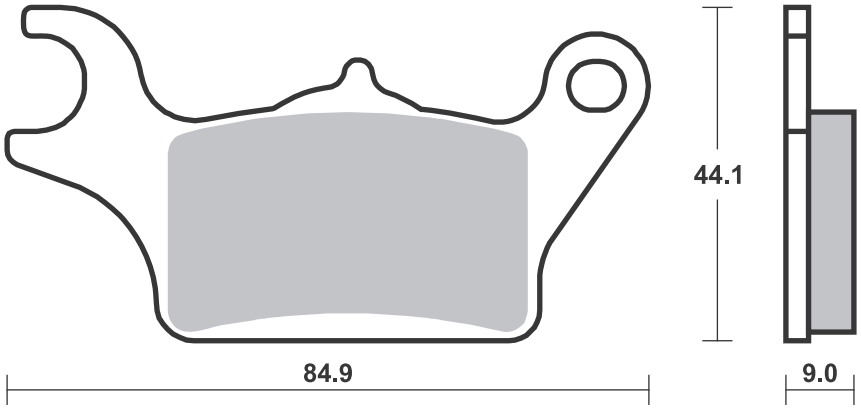

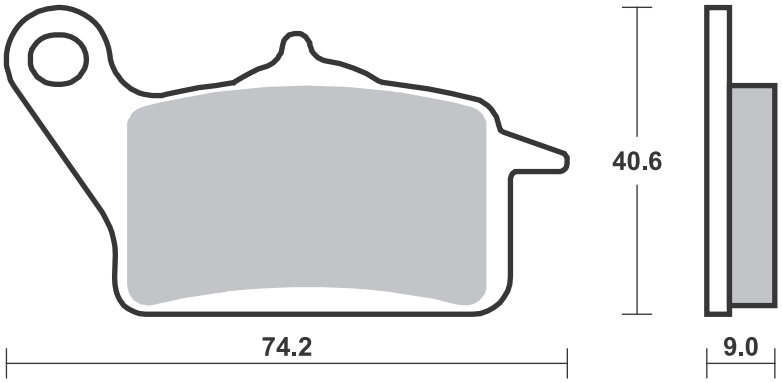

Available compounds **HF • CT • MS** **SBS 224**

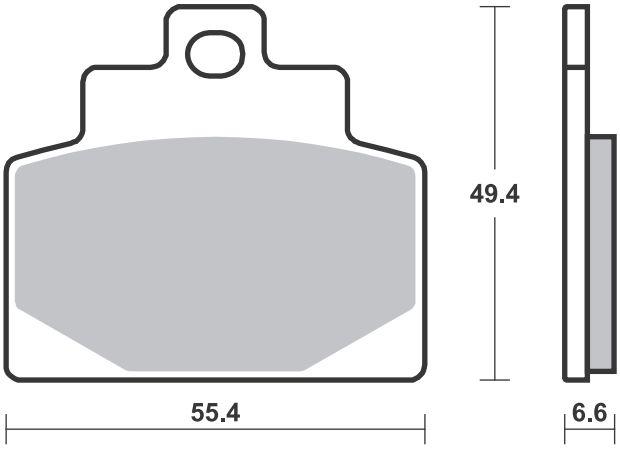

SBS 225 Recommended compound

YAMAHA				
MW	125	Tricity	14 - 19	**CT**

SBS 226 Recommended compound

YAMAHA				
GPD	125	N-Max	15 - 19	**CT**
GPD	155	N-Max	15 - 19	**CT**

Available compounds **HF • CT** **SBS 225**

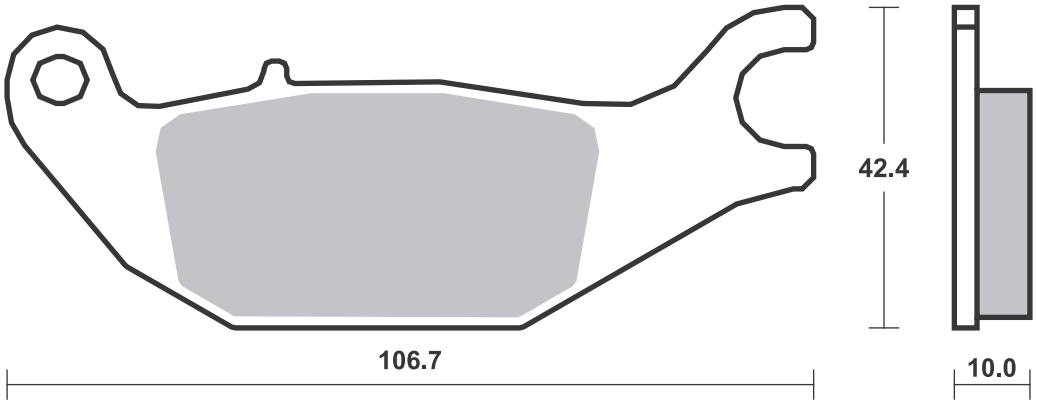

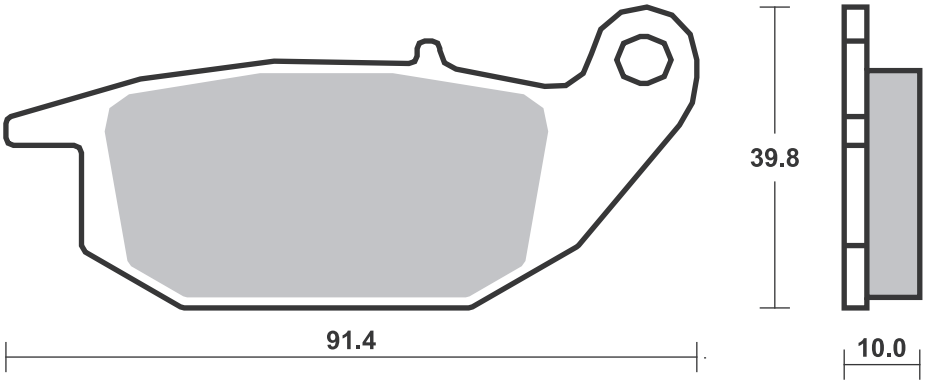

Available compounds **HF • CT** **SBS 226**

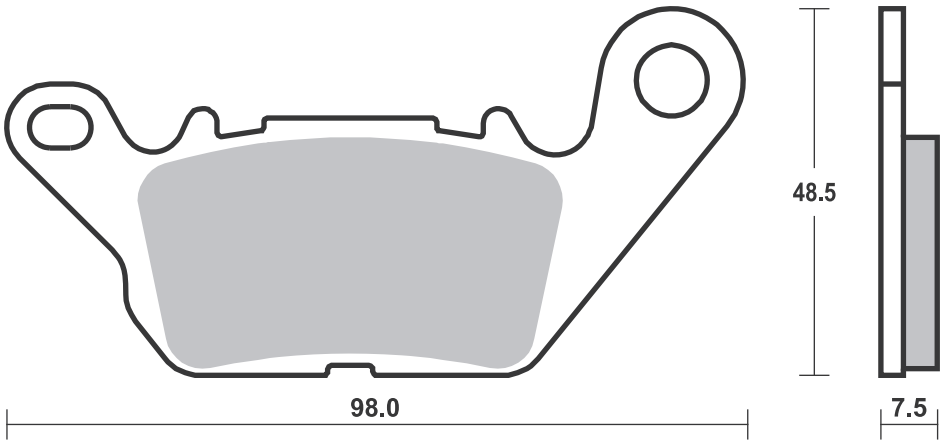

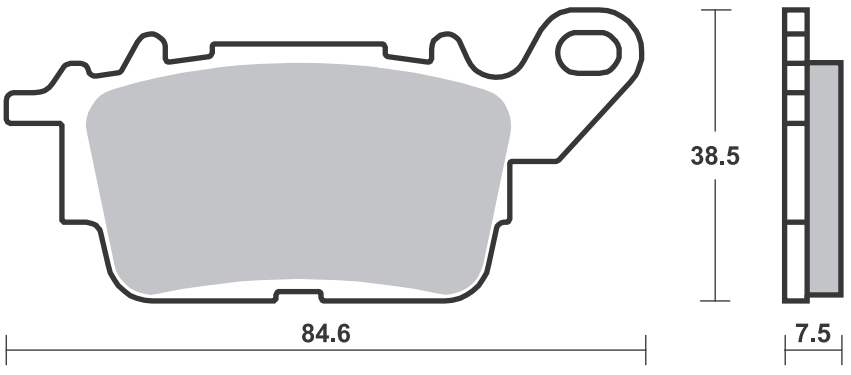

Dimensions in mm / Dimensions en mm • 1” = 25.4 mm , 1 mm = 0.04”

SBS 227 Recommended compound

YAMAHA				
GPD	125	N-Max	15 - 19	**CT**
GPD	155	N-Max	15 - 19	**CT**
	300	Tricity	20 - 20	**CT**

SBS 228 Recommended compound

HONDA				
PCX	125		18 - 20	**CT**
PIAGGIO VESPA				
	125	Liberty iGet 4T 3V	17 - 19	**CT**
	125	Medley	16 - 19	**CT**
	125	Medley S	17 - 19	**CT**
	125	New Liberty	16 - 19	**CT**
	150	Medley	16 - 19	**CT**

Available compounds **HF • CT** **SBS 227**

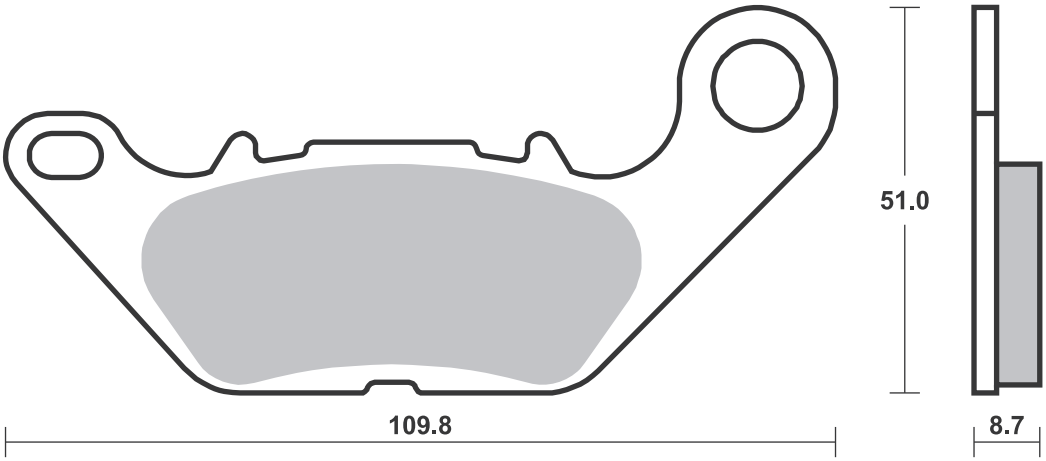

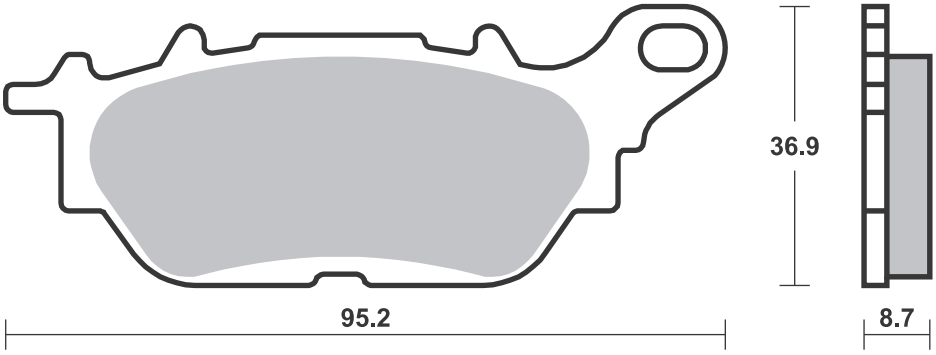

Available compounds **HF • CT** **SBS 228**

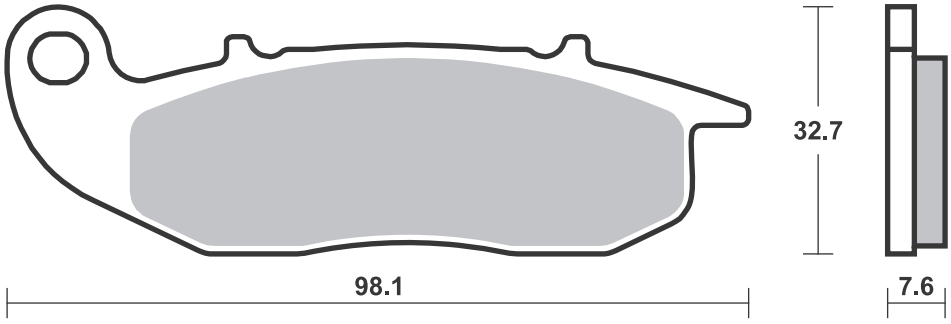

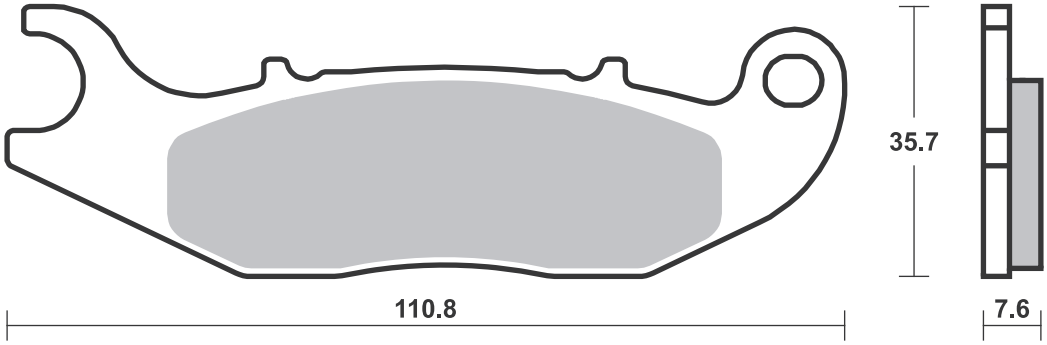

SBS 229 Recommended compound

YAMAHA					
YP	125	RA X-Max ABS	17 - 19	**CT**	
YP	300	X-Max	17 - 20	**CT**	

Available compounds **HF • CT** **SBS 229**

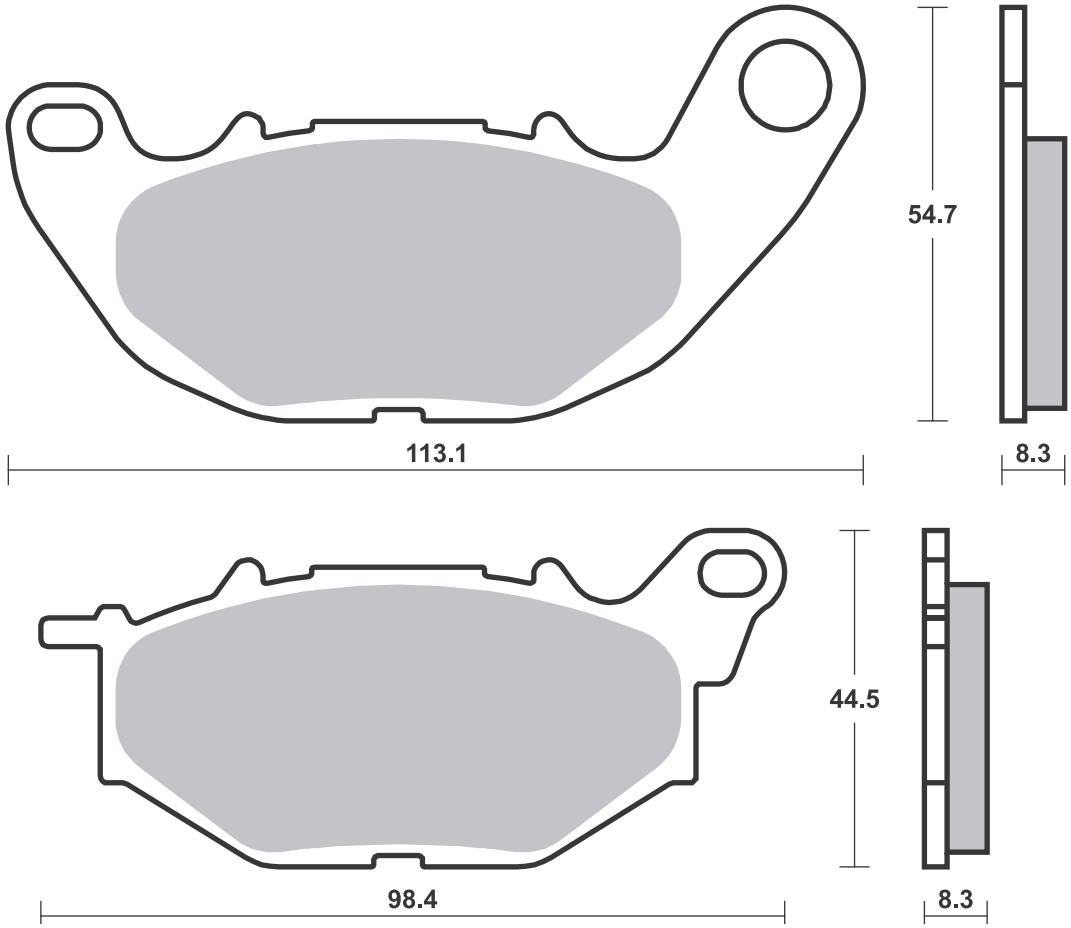

Dimensions in mm / Dimensions en mm • 1” = 25.4 mm , 1 mm = 0.04”

SBS 230 Recommended compound

YAMAHA				
YP	125	RA X-Max ABS	17 - 19	**CT**
YP	300	X-Max	17 - 20	**CT**

SBS 231 Recommended compound

BMW				
C	400	GT	19 - 19	**MS**
C	400	X	18 - 21	**MS**

Available compounds **HF • CT** **SBS 230**

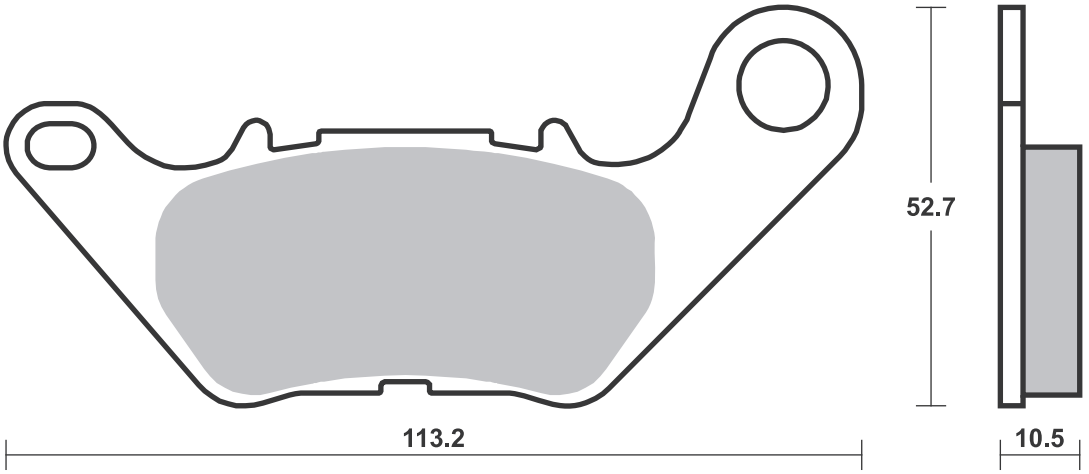

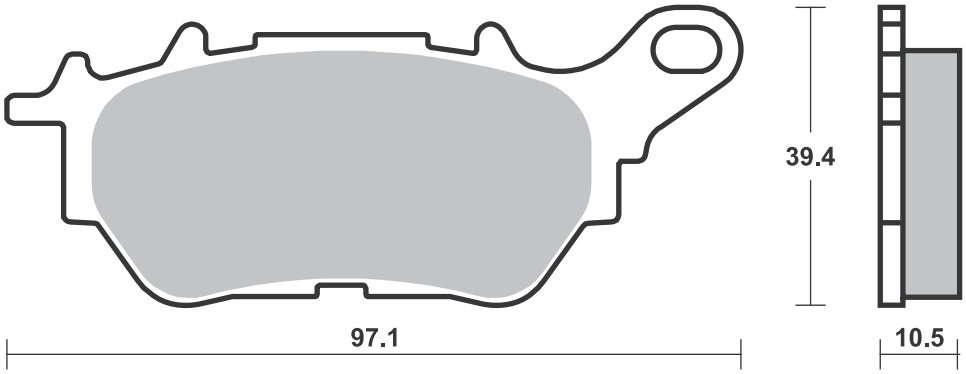

Available compounds **HF • CT • MS** **SBS 231**

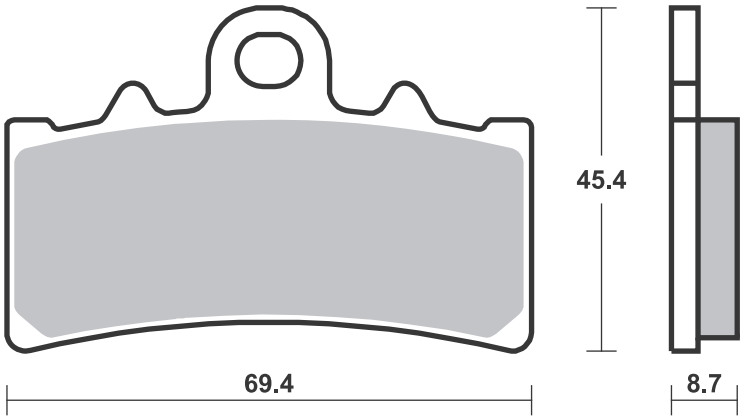

SBS 232 Recommended compound

KEEWAY				
	125 Cityblade	17 - 19	**HF**	
	125 Logik	17 - 19	**HF**	

SBS 233 Recommended compound

HONDA				
PCX	125 (Nissin cal.)	18 - 20	**CT**	
PCX	150	18 - 20	**CT**	

Available compounds **HF** **SBS 232**

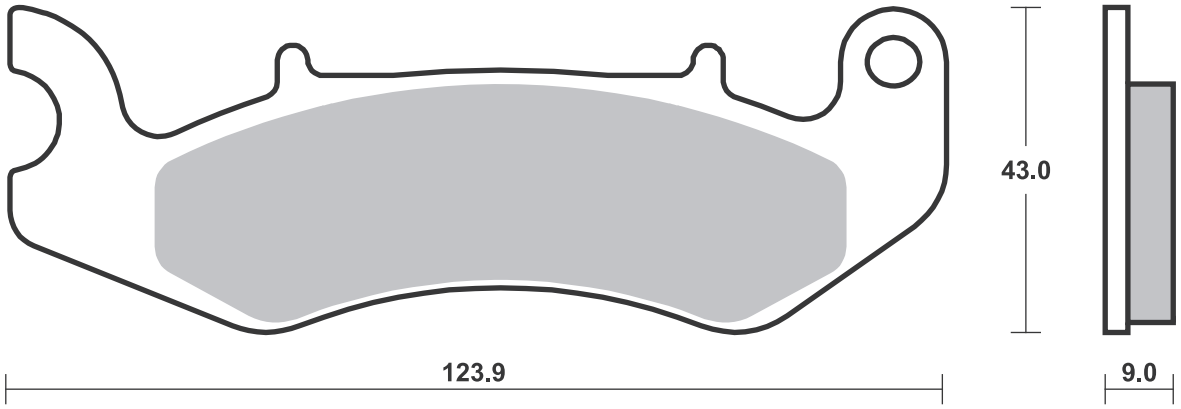

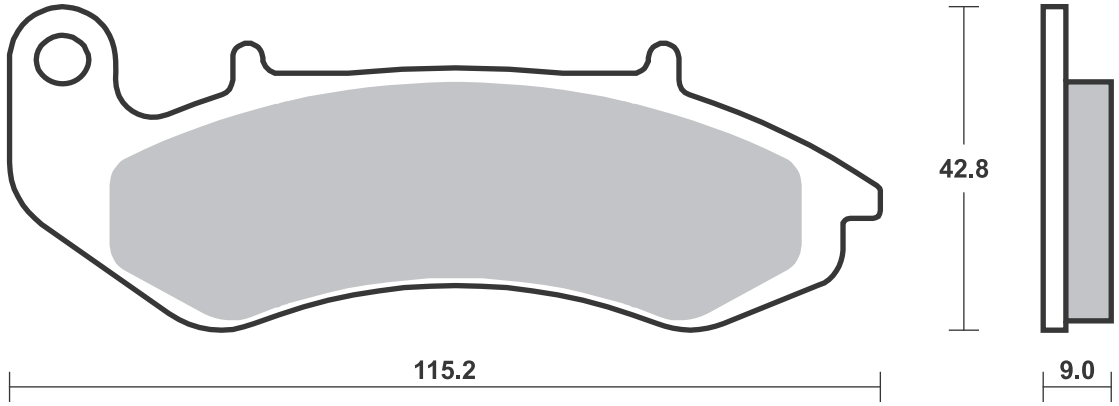

Available compounds **HF • CT • MS** **SBS 233**

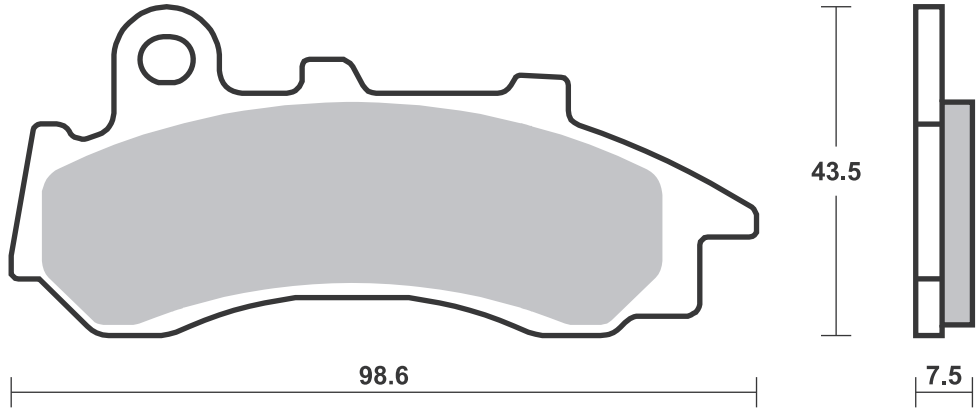

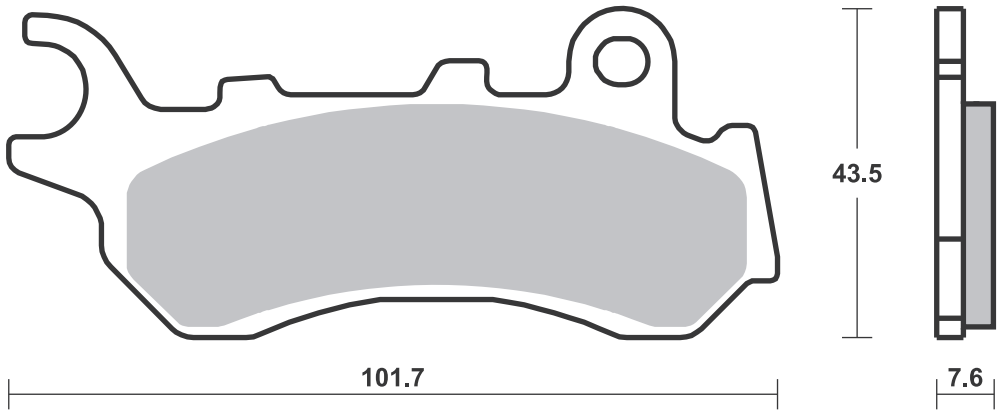

Dimensions in mm / Dimensions en mm • 1” = 25.4 mm , 1 mm = 0.04”

SBS 501 Recommended compound

HONDA				
CB	350	F, F1	73-76	**HF**
CB	360	G, T	73-76	**HF**
CB	400	F, F1, F2	75-79	**HF**
CB	450	K5, K6, K7	72-77	**HF**
CB	500	F	72-75	**HF**
CB	500	T	75-78	**HF**
CB	550	F	75-79	**HF**
CB	550	K	74-78	**HF**
CB	750	A	76-78	**HF**
CB	750	F1	75-76	**HF**
CB	750	K Four	77-78	**HF**

SBS 502 Recommended compound

HONDA				
CB	750	K0-K6 Four	70-76	**HF**

SBS 503 Recommended compound

KAWASAKI				
S2A	350		73-73	**HF**
KH	500	H1	74-75	**HF**
KZ	750	H	72-75	**HF**
SUZUKI				
RE		5M, A	75-77	**HF**
GT	125		75-78	**HF**
GT	185		75-77	**HF**
GT	250		73-78	**HF**
GT	380		73-77	**HF**
GT	500		75-77	**HF**
GT	550		73-77	**HF**
GT	750		73-77	**HF**

Available compounds **HF • DCC** **SBS 501**

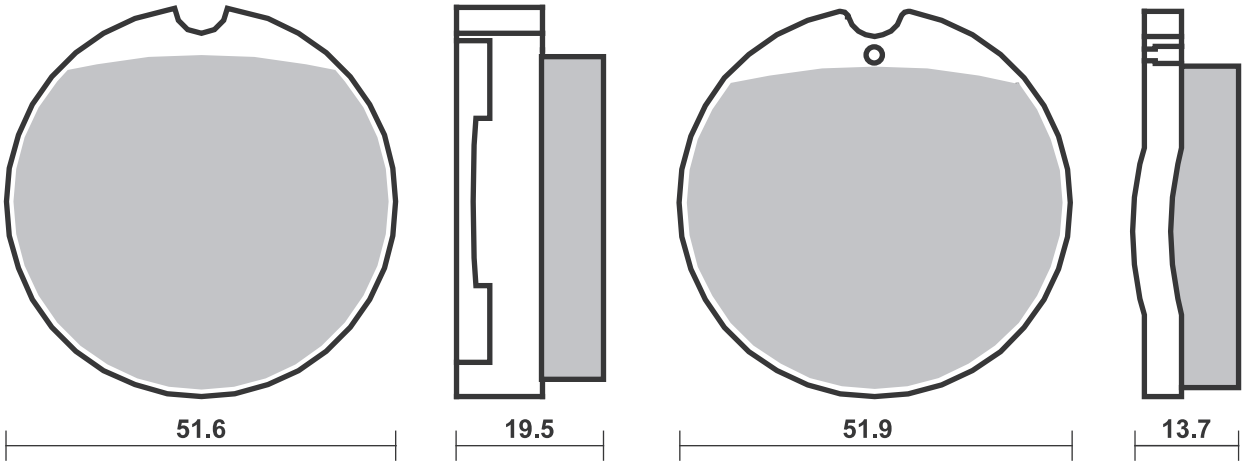

Available compounds **HF** **SBS 502**

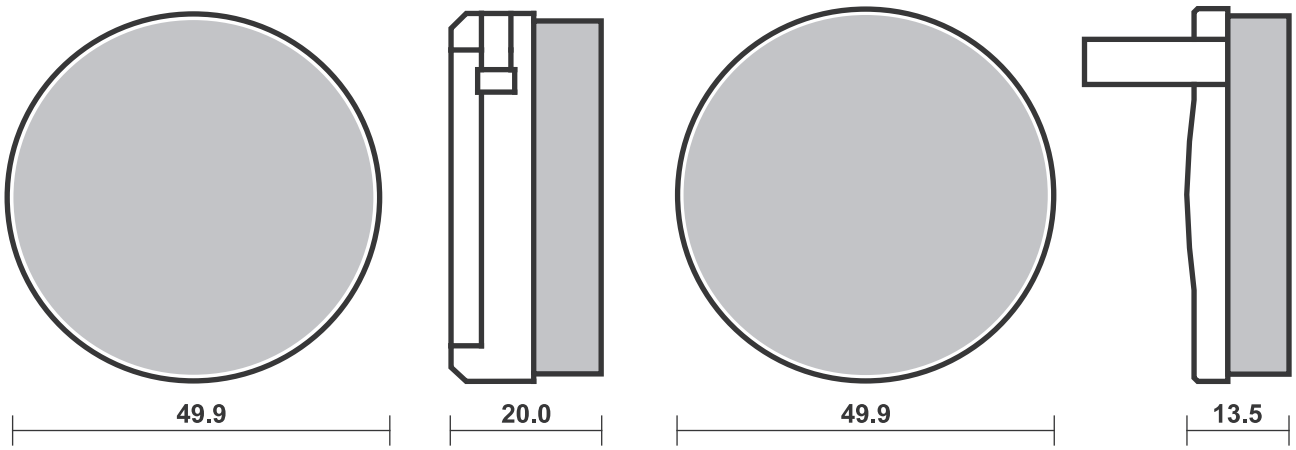

Available compounds **HF** **SBS 503**

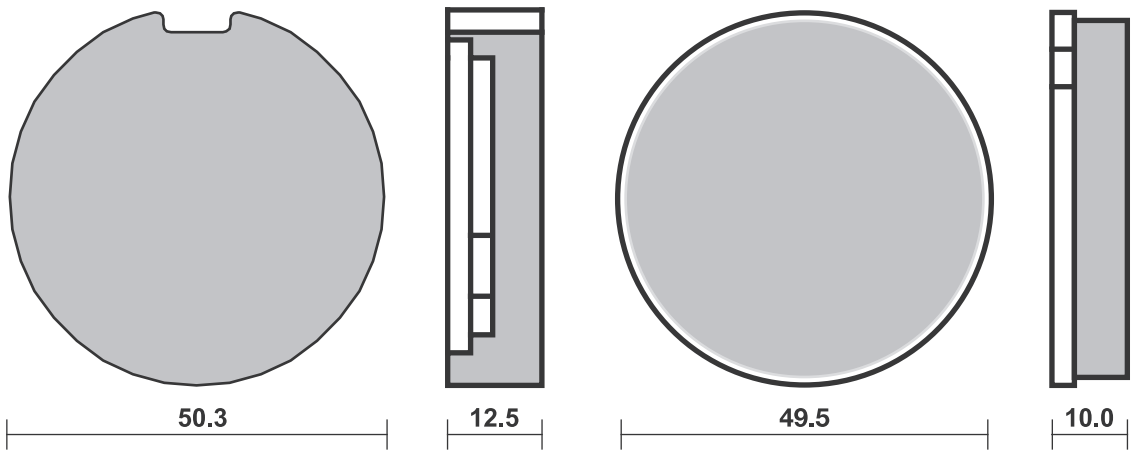

Dimensions in mm / Dimensions en mm • 1” = 25.4 mm , 1 mm = 0.04”

SBS 504 Recommended compound

ISR CALIPERS				
2 Piston (22-023/026)				
YAMAHA				
RD	250	73-77	**HF**	
RD	250	77-77	**HF**	**HF**
TZ	250	82-85	**HF**	
RD	350	73-79	**HF**	
XS	360 B	76-76	**HF**	
TX	500 A, B	74-77	**HF**	
XS	500	75-77	**HF**	
TX	650	72-73	**HF**	
XS	650	75-77	**HF**	
TX	750	73-74	**HF**	
TX	750 A	73-76	**HF**	

SBS 505 Recommended compound

NORTON				
MK2	850 Commando	73-75	**HF**	
MK3	850 Commando	75-77	**HF**	**HF**

SBS 506 Recommended compound

BENELLI				
	750 Sei	75-78	**HF**	
	900 Sei	84-84	**HF**	**HF**
BERINGER				
2 Piston Classic Billet Caliper				
BIMOTA				
	all models	82-88	**HF**	**HF**
SB3	1000 D	83-83	**HF**	**HF**
BMW				
R65	650 GS	87-92	**HF**	
R65	650 GS	91-92	**HS**	
R65	650 LS	82-85	**HF**	
R65/1	650	86-86		**HF**
K75	750	90-90		**LS**
K75	750 C	85-88	**HF**	

BMW				
K75	750 RT	91-96		**LS**
K75	750 S, C	85-95	**HF**	**HF**
R80	800	77-85	**HF**	
R80	800 G/S P.-D.	86-86	**HF**	
R80	800 GS	81-87	**HF**	
R80	800 GS	91-92	**HS**	
R80	800 R	91-95		**LS**
R80	800 RT	83-83	**HF**	
R80/7	800	79-81		**HF**
K1	1000	89-89		**LS**
K100	1000 LT	87-87	**HF**	**HF**
K100	1000 LT	92-94		**LS**
K100	1000 LT ABS	89-89		**LS**
K100	1000 RS	90-92		**LS**
K100	1000 RS ABS	88-89		**LS**
K100	1000 RS, RT	83-89	**HF**	**HF**
R100	1000	81-84	**HF**	**HF**

BMW				
R100	1000 CS,RS, RT	81-84	**HF**	**HF**
R100	1000 R	91-95		**LS**
R100	1000 RS	76-80		**HF**
R100	1000 RS	93-95		**LS**
R100	1000 S	78-80		**HF**
R100	1000 T	79-84		**HF**
K1100	1100 LT/SE	92-00		**LS**
K1100	1100 RS	93-96		**LS**
R1100	1100 RS	93-01		**LS**
K	1200 GT (K41) With Integral ABS	02-05		**LS**
K	1200 RS	97-05		**LS**
BREMBO RACING CALIPERS				
108N, P2 38				
F08				

Applications for this part number continues on following page.

Available compounds **HF • DCC** **SBS 504**

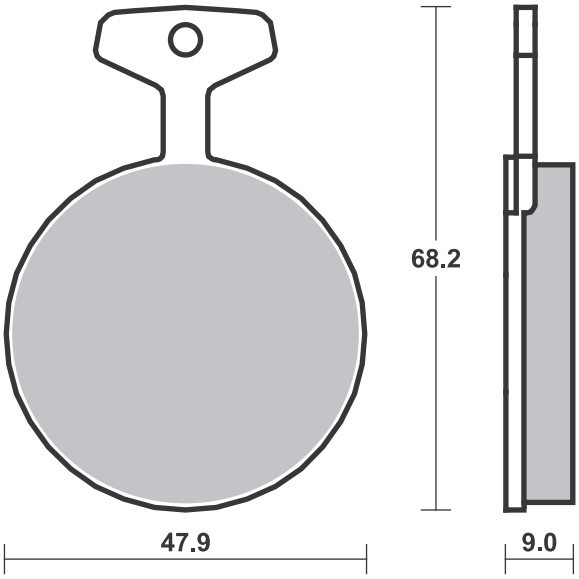

Available compounds **HF** **SBS 505**

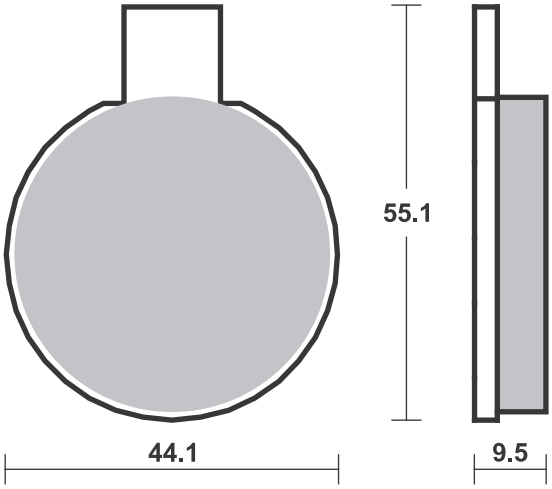

Available compounds **HF • HS • LS • DCC • DS-1 • DS-2 • H.HF • H.CT • H.LSSBS 506**

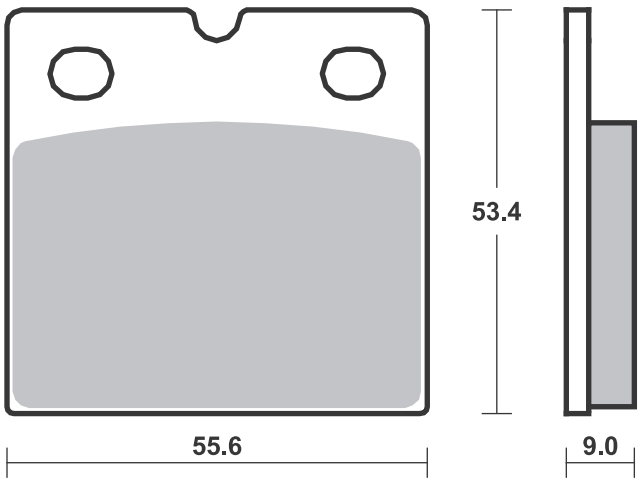

Dimensions in mm / Dimensions en mm • 1” = 25.4 mm , 1 mm = 0.04”

SBS 506 Recommended compound

DUCATI					
	250	Desmo	70-77	**HF**	
	350	Desmo	70-77	**HF**	
	350	F3	86-90	**HF**	**HF**
	500	Sport	77-82	**HF**	**HF**
	600	Pantah TL, SL	78-89	**HF**	**HF**
	600	SL, TL Pantah	76-89	**HF**	
	650	Pantah	84-89	**HF**	**HF**
	750	F1	86-98	**HF**	**HF**
	750	GT	74-76	**HF**	
	750	Paso	86-88	**HF**	
	750	Sport	90-90	**HS**	**LS**
	750	SS	74-76	**HF**	**HF**
	750	SS	91-98		**HF**
	851	Strada	91-92		**HF**
	860	GT	75-77	**HF**	
	860	GT	85-85	**HF**	**HF**
	888	Roche Replica	91-91		**HF**
	900	GTS	77-79	**HF**	
	900	Mike Hailwood			
		Replica	85-86	**HF**	**HF**
	900	S2 Desmo	85-85	**HF**	**HF**
	900	Sport	77-78	**HF**	**HF**
	900	SS	78-89	**HF**	**HF**
906	900	Paso	89-89	**HF**	
	1000	/6 Mike			
		Hailwood			
		Replica	85-85	**HF**	**HF**
	1000	Mille Replica	84-85	**HF**	**HF**
	1000	S2 Desmo	85-85	**HF**	**HF**
INDIAN					
	1700	Chief			
		Blackhawk	11-13		**H.LS**
	1700	Chief Bomber	10-13		**H.LS**
	1700	Chief Classic	10-13		**H.LS**
	1700	Chief Dark			
		Horse	10-13		**H.LS**
	1700	Chief Deluxe	09-13		**H.LS**
	1700	Chief			
		Roadmaster	09-13		**H.LS**
	1700	Chief Standard	09-13		**H.LS**
	1700	Chief Vintage	09-13		**H.LS**

JAWA					
CZ	125	2T	95-00	**HF**	
CZ	125	MX	95-00	**HF**	
CZ	180		92-92	**HF**	
	300	Trail	93-93	**HF**	
LAVERDA					
SFC	600		86-89	**HF**	**HF**
	650	V-Six	93-93	**HS**	**LS**
	1000	Jota	76-79	**HF**	**HF**
3C	1000	3CE, 3CL	74-75	**HF**	**HF**
RGS	1000		83-83	**HF**	**HF**
RGS	1000	Jota	86-86	**HF**	**HF**
SFC	1000		85-86	**HF**	**HF**
TGA	1000	Executive	84-84	**HF**	**HF**
	1200	Mirage	78-80	**HF**	**HF**
MOTO-GUZZI					
NTX	350		90-90		**HF**
V35	350	C	82-86	**HF**	
V35	350	Florida	85-86	**HF**	
V35	350	GT	90-90	**HF**	
V35	350	III	87-87	**HF**	**HF**
V35	350	TT	86-86	**HF**	**HF**
NTX	650		90-02		**HF**
V65	650	Florida	86-94	**HF**	**HF**
V65	650	GT	90-94	**HF**	
NTX	750		90-93		**LS**
S3	750		75-76	**HF**	
SP	750		91-92	**HS**	**LS**
V75	750		86-88	**HF**	**HF**
V75	750	Duna	86-90	**HF**	**HF**
V75	750	TT Paris-Dakar	86-86	**HF**	**HF**
	850	Le Mans	76-79	**HF**	**HF**
T	850		74-76	**HF**	
T3	850		75-80	**HF**	**HF**
T4	850		75-82	**HF**	**HF**
T5	850		75-88	**HF**	**HF**
T5	850	N.T.	86-88	**HF**	**HF**
	1000	California II	85-88	**HF**	**HF**
	1000	California III C	91-95	**HS**	**LS**
	1000	California III,			
		Fuel Injection	89-89	**HF**	**HF**

MOTO-GUZZI					
	1000	Daytona	91-02		**HF**
	1000	Le Mans IV	85-89	**HF**	**HF**
	1000	Le Mans, V	90-98	**HS**	**LS**
GT	1000	V	91-91	**HS**	**LS**
S	1000		90-90	**HS**	**LS**
SP	1000	III	91-94	**HS**	**LS**
SP	1000	Le Mans	79-83	**HF**	
V	1000	Strada	93-94	**HF**	
	1100	California	96-99	**HS**	**LS**
NORTON					
	600	Commander	90-90	**HF**	**HF**
	600	Interpol	83-88	**HF**	**HF**
	600	Wankel Classic	88-89	**HF**	**HF**
F-1	600		90-90		**HF**
TRIUMPH					
	750	Bonneville U.K.	87-87	**HF**	**HF**

SBS 507 Recommended compound

YAMAHA					
XS	250	C	77-78	**HF**	**HF**
XS	250	D, E	79-80	**HF**	
XS	360	C, D	77-77	**HF**	**HF**
XS	400		77-77	**HF**	**HF**
SR	500		78-91	**HF**	
XS	500		77-81	**HF**	**HF**
XJ	650		80-82	**HF**	
XJ	650	RJ Seca	81-83	**HF**	
XS	650		75-85	**HF**	**HF**
XS	650		77-79	**HF**	
XS	650		80-82		**HF**
XS	650	SE	80-82	**HF**	**HF**
XS	650	SJ, SK	82-82	**HF**	
XS	650	SK, Heritage	83-83	**HF**	**HF**
XJ	750	E	81-83	**HF**	
XS	750		77-80	**HF**	**HF**
XS	750	H, J, K	81-82		**HF**

YAMAHA					
XS	750	SE	79-80		**HF**
XS	850		80-80	**HF**	**HF**
XV	920		81-82	**HF**	
XS	1100	E,F,G,H	78-81	**HF**	**HF**
XS	1100	SF, SG, SH, LG	79-81		**HF**

Available compounds **HF • HS • LS • DCC • DS-1 • DS-2 • H.HF • H.CT • H.LS** **SBS 506**

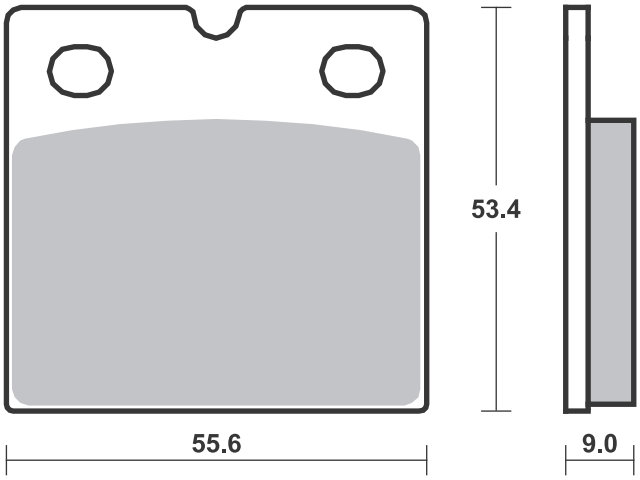

Available compounds **HF** **SBS 507**

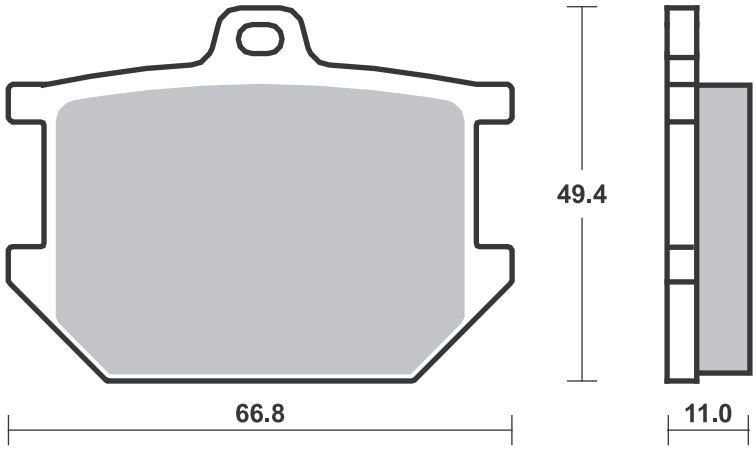

Dimensions in mm / Dimensions en mm • 1” = 25.4 mm , 1 mm = 0.04”

SBS 508 Recommended compound

HONDA				
CB	750 SS	77-79	**HF**	
GL	1000 K1,			
	K2 Gold Wing	75-77	**HF**	

SBS 509 Recommended compound

HONDA				
CB	750 F1	75-76		**HF**
GL	1000 K1,			
	K2 Gold Wing	75-77		**HF**
GL	1000 K3 Gold Wing	78-79		**HF**
PERFORMANCE MACHINE				
162 X 2				

SBS 510 Recommended compound

KAWASAKI				
KH	250	76-80	**HF**	
KH	400	76-78	**HF**	
KZ	400	74-77	**HF**	
KZ	400 H1 (LTD)	79-79	**HF**	
KZ	440	80-82	**HF**	
KZ	440 C	80-81	**HF**	
KZ	440 LTD	80-82	**HF**	
KH	500	76-79	**HF**	
KZ	550 A1	80-80	**HF**	
KZ	650	78-82	**HF**	
KZ	650 C	78-79	**HF**	
KZ	750 B	76-79	**HF**	
KZ	750 LTD	80-81	**HF**	
KZ	900	76-76	**HF**	
KZ	900	76-77	**HF**	
KZ	900 A	76-77	**HF**	
KZ	1000	76-81	**HF**	

KAWASAKI				
KZ	1000 GL	80-82	**HF**	
KZ	1000 H1	80-83	**HF**	

Available compounds **HF** **SBS 508**

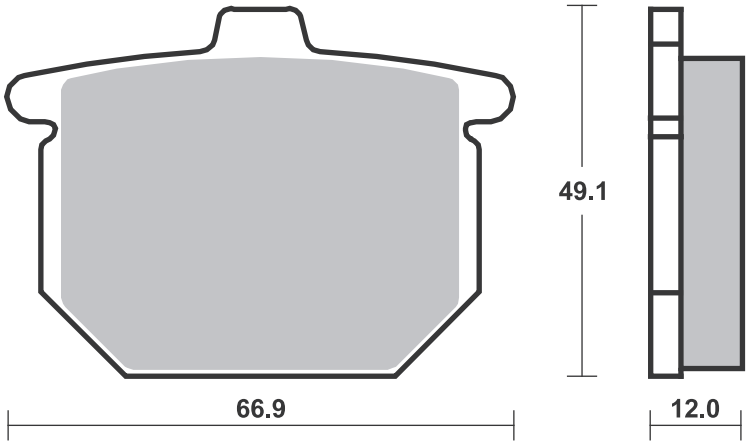

Available compounds **HF • H.HF • H.CT** **SBS 509**

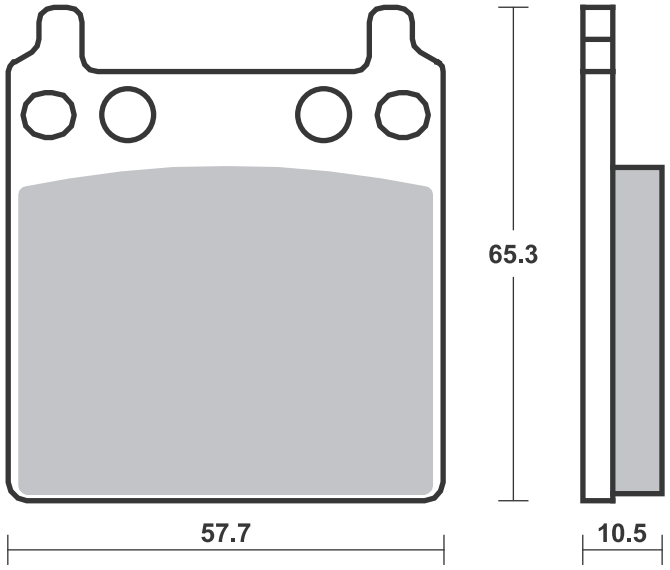

Available compounds **HF** **SBS 510**

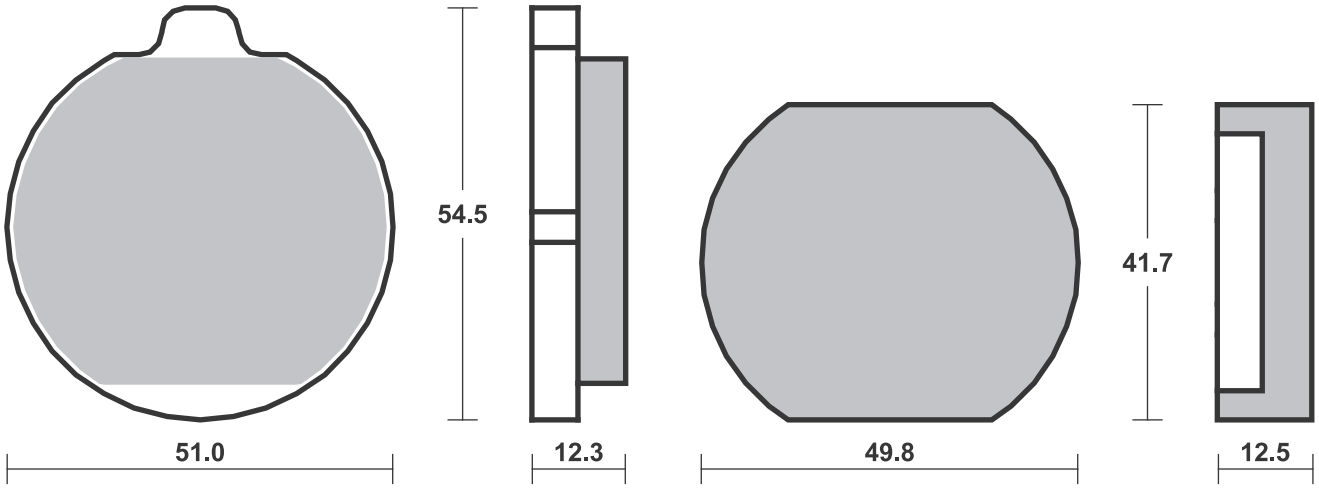

Dimensions in mm / Dimensions en mm • 1” = 25.4 mm , 1 mm = 0.04”

SBS 511 Recommended compound

SUZUKI				
GS	400		77-78	**HF**
GS	425		79-79	**HF**
GS	750		76-77	**HF**
GS	750	D	77-79	**HF**
GS	750	E	77-79	**HF**
GS	850		79-80	**HF**

SBS 512 Recommended compound

GMA				
2 Piston Caliper, large Model A				
KAWASAKI				
KZ	650		78-82	**HF**
KZ	1000		76-81	**HF**
KZ	1000	F1	80-82	**HF**
KZ	1000	GL	80-82	**HF**
KZ	1000	H1	80-83	**HF**
KZ	1000	MKII	79-80	**HF**
KZ	1000	ST	79-81	**HF**
KZ	1300		79-81	**HF**
SUZUKI				
GS	450		86-86	**HF**
GS	550		80-84	**HF**
GR	650		83-84	**HF**
GS	650		81-83	**HF**

SUZUKI				
GS	650	G	83-87	**HF**
GS	650	Turbo, XN	83-85	**HF**
GS	700		85-85	**HF**
GS	750		76-79	**HF**
GS	750	D	77-79	**HF**
GS	750	E	77-79	**HF**
GS	750	SD	83-83	**HF**
GS	850		79-82	**HF**
GS	850	G	83-86	**HF**
G	1000	SZ	82-82	**HF**
GS	1000		78-81	**HF**
GS	1000	ET	81-81	**HF**
GS	1000	EX	81-81	**HF**
GS	1100		81-83	**HF**
GS	1100	ED, ESD, GD	83-83	**HF**
GS	1100	G	86-88	**HF**
GS	1100	GKD, SD, GLD	83-83	**HF**
GS	1100	L	79-79	**HF**

SUZUKI				
GT	1100		80-80	**HF**
GV	1200	GLG Madura	86-86	**HF**
GV	1400	Cavalcade	85-86	**HF**

SBS 513 Recommended compound

HARLEY DAVIDSON					
FXE		Series	74-77		**H.HF**
XLCH	1000		73-73	**H.HF**	
FL	1200	FLH Police	75-79	**H.HF**	**H.HF**
FLH	1200		74-76	**H.HF**	**H.HF**
FLH	1200		80-80	**H.HF**	
FLH	1200	Anniversary	78-78	**H.HF**	**H.HF**
FLH	1200	Touring	77-78	**H.HF**	**H.HF**
FLHS	1200		77-80	**H.HF**	**H.HF**
FX	1200		74-80		**H.HF**
FXE	1200		74-80		**H.HF**
FXS	1200		78-79		**H.HF**
FLH	1340	80	78-81	**H.HF**	**H.HF**
FLH	1340	80	81-81	**H.HF**	
FLH	1340	Electra Glide	82-83		**H.HF**
FLH	1340	Electra Glide Spec.	84-84	**H.HF**	
FXB	1340	80	80-81		**H.HF**
FXB	1340	Sturgis	82-82		**H.HF**

HARLEY DAVIDSON					
FXE	1340	80	78-81		**H.HF**
FXE	1340	Super Glide	83-84		**H.HF**
FXEF	1340	80 Fat Bob	79-81		**H.HF**
FXR	1340		78-81		**H.HF**
FXS	1340	80	79-81		**H.HF**
FXS	1340	Low Rider	82-82		**H.HF**
FXWG	1340	80	80-81		**H.HF**
FXWG	1340	Wide Glide	82-82		**H.HF**

Available compounds **HF** **SBS 511**

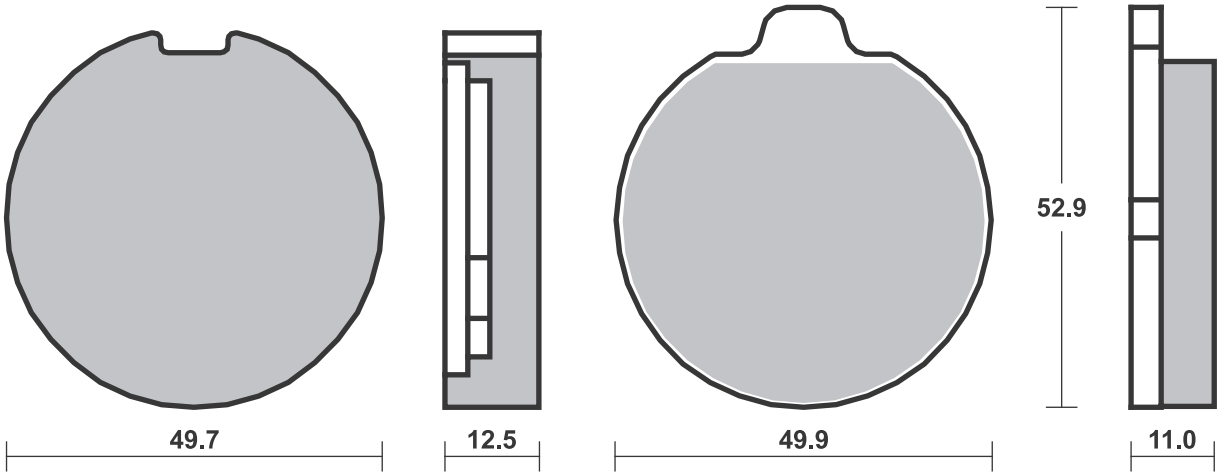

Available compounds **HF • H.HF • H.CT** **SBS 512**

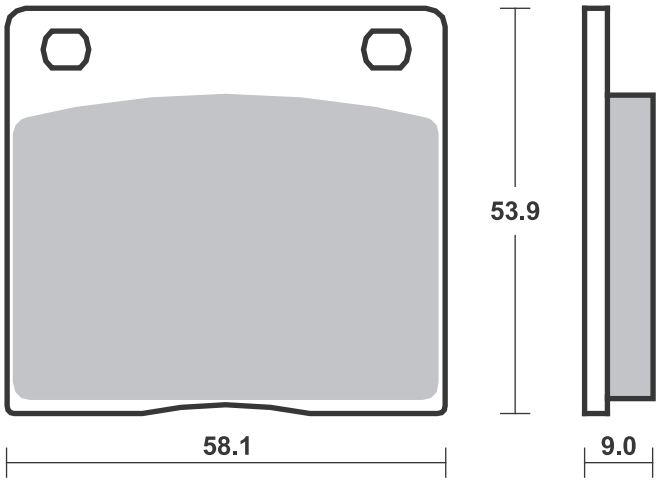

Available compounds **H.HF • H.CT** **SBS 513**

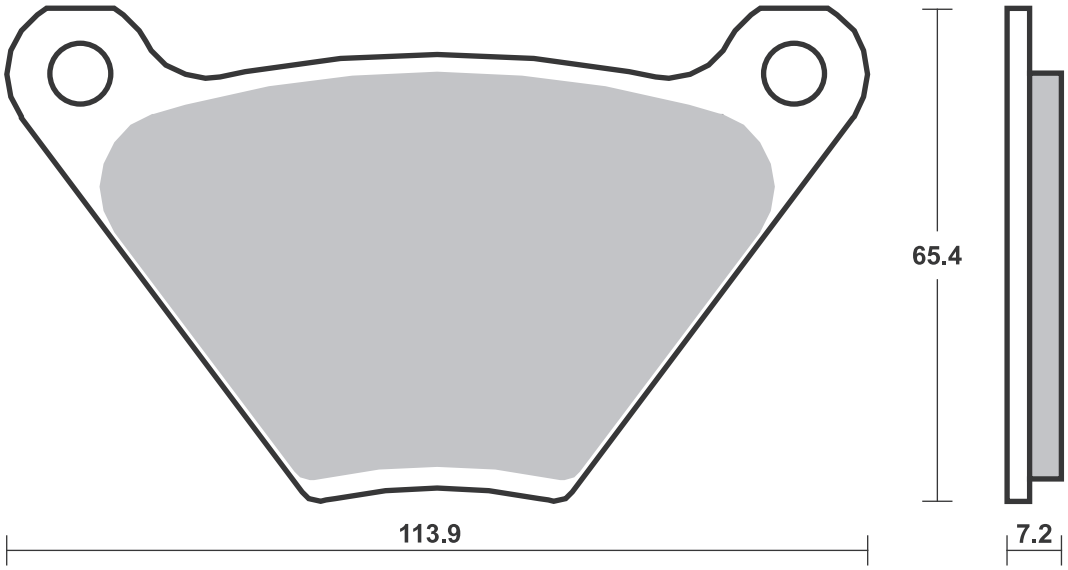

Dimensions in mm / Dimensions en mm • 1” = 25.4 mm , 1 mm = 0.04”

SBS 514 Recommended compound

KAWASAKI			
KZ	650 C	78-79	**HF**
KZ	750 B	76-79	**HF**
KZ	900	76-76	**HF**

SBS 515 Recommended compound

SUZUKI			
GT	125	78-82	**HF**
GT	250	78-81	**HF**
GT	380 Asco	77-77	**HF**
GS	400	78-82	**HF**
GS	425	80-80	**HF**
GT	500	73-75	**HF**
GS	550	77-79	**HF**
GT	550	78-78	**HF**
GS	750	78-79	**HF**
GS	1000	78-79	**HF**

SBS 516 Recommended compound

KAWASAKI			
KZ	200	78-79	**HF**

Available compounds HF — SBS 514

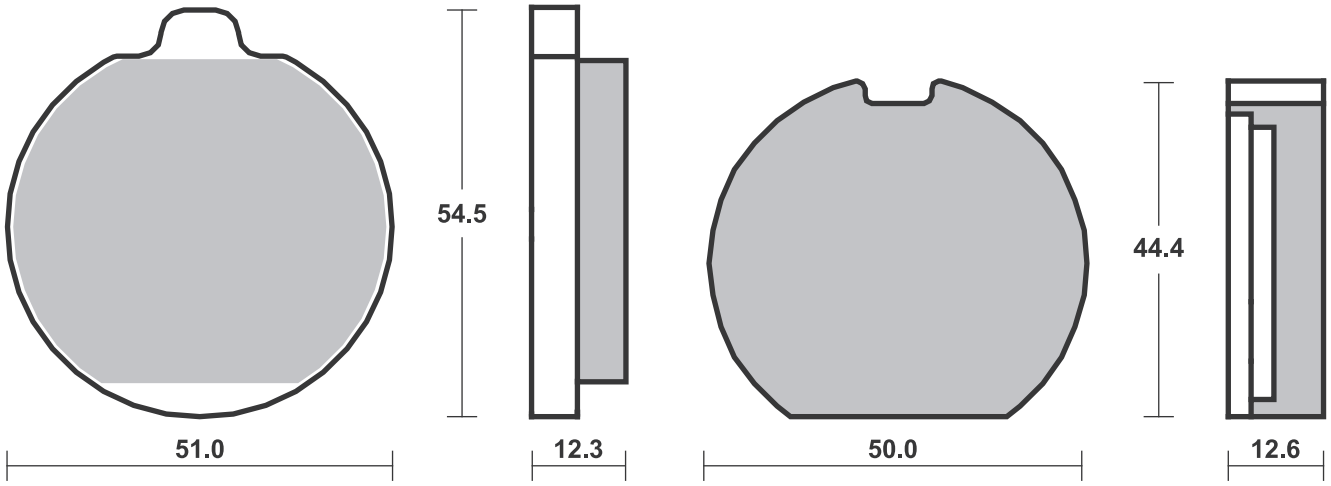

Available compounds HF — SBS 515

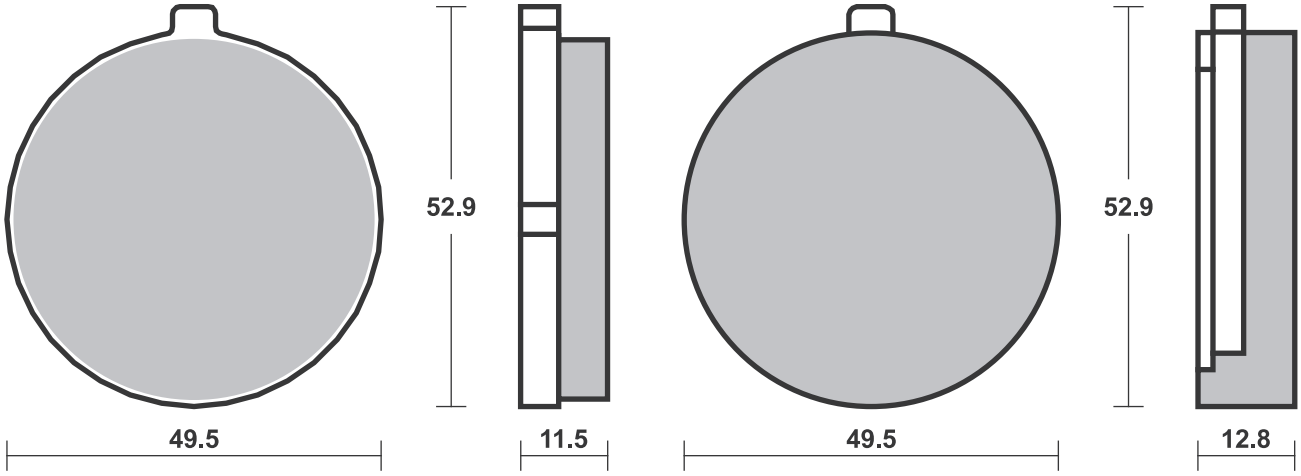

Available compounds HF — SBS 516

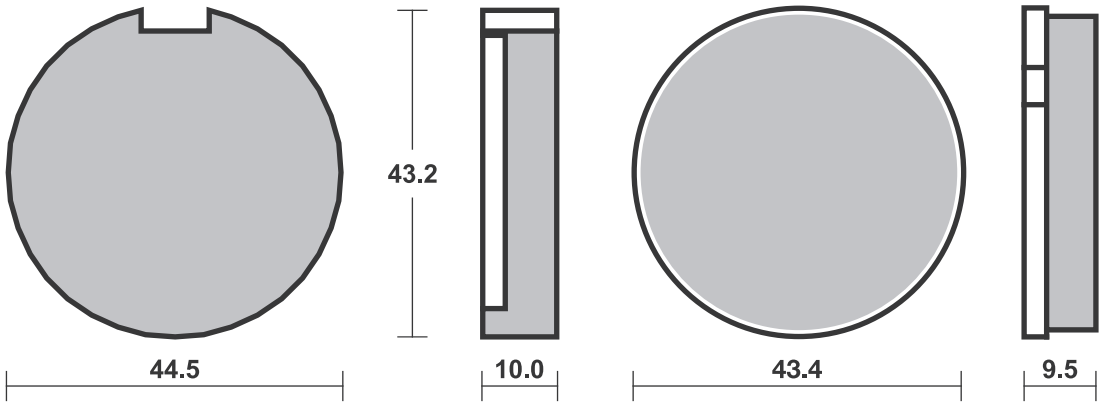

SBS 517 Recommended compound

HONDA					
MT	125	R	78-78	**HF**	
CX	500		78-80	**HF**	
CB	750	F	77-80	**HF**	**HF**
CB	750	SS	77-79		**HF**
CB	900	F	78-80	**HF**	**HF**
CBX	1000		78-80	**HF**	**HF**
GL	1000	Gold Wing	81-81	**HF**	**HF**
GL	1000	Gr. Tour. Gold Wing	81-82	**HF**	**HF**
GL	1000	K3 Gold Wing	78-79	**HF**	
GL	1100	A Gold Wing	79-83	**HF**	**HF**

SBS 519 Recommended compound

APRILIA					
RS	250	Pista	04-04		**HF**
ARMSTRONG					
MX	500		86-86	**SI**	
MX	600		86-86	**SI**	
BENELLI					
	654	Sport	83-83	**HF**	**HF**
	900	Tornado 3	00-06		**LS**
TnT	1100		04-04		**LS**
BETA					
ALP	240		96-96		**RSI**
ALP	260		96-96		**RSI**
	500	GS, RV	84-84	**HF**	
BIMOTA					
YB7	400		89-89		**HF**
	500	Vdue	97-00		**HF**
	600	Bellaria	91-91		**HF**
YB9	600	SRI	97-97		**HF**
BB1	650	Supermono	97-00		**HF**
SB7	750		96-88		**HF**
YB4	750		89-89		**HF**
1D	851	Tesi	91-91		**HF**
1D	900	Tesi	93-93		**HF**
DB2	900		92-00		**HF**
DB3	900	Mantra	97-00		**HF**
DB4	900		99-00		**LS**
1D	906	Tesi	91-91		**HF**
	1000	Furano	92-93		**HF**
2D	1000	Tesi	04-06		**LS**
SB8	1000	R	98-00		**LS**
SB8K	1000		06-06		**LS**
SB8K	1000	Santamonica	07-09		**LS**
YB11	1000		97-00		**HF**
YB6	1000		89-89		**HF**
YB8	1000		90-90		**HF**
	1002	Dieci	91-91		**HF**
DB7	1099		09-09		**LS**
SB6	1100		97-00		**HF**

BREMBO RACING CALIPERS					
Goldline 20.5161.42/51, road					
CAGIVA					
	125	Blues	87-85		**HF**
	125	Blues	93-93	**HF**	**HF**
	125	Cruiser	88-89		**HF**
	125	Enduro	86-86	**HF**	
	125	Raptor	03-10		**HF**
	125	Tamanaco	89-89		**HF**
WMX	125	GP-Replica	86-89	**SI**	
WRX	125		85-85	**HF**	
	200	Elefant	86-86	**HF**	
MXR	250		82-82	**HF**	
WMX	250	GP	82-82	**SI**	
	350	Alazurra	85-87	**HF**	**HF**
	350	Elefant	86-89		**HF**
T4	350	R	87-99	**HF**	
	500	Mito	07-07		**LS**
T4	500	E	87-90	**HF**	
WMX	500		85-86	**SI**	
WMX	500	Cross	87-87	**SI**	**SI**
SP	525	Mito	08-10		**LS**
	650	Alazurra	84-84	**HF**	**HF**
	650	Elefant	86-87		**HF**
CAN-AM					
	200	ASE	86-86	**SI**	
	250	ASE	86-86	**SI**	
	250	MX LC	86-86	**SI**	
	350	ASE	86-86	**SI**	
	406	ASE	87-87	**SI**	
	500	ASE	86-86	**SI**	
	500	MX	86-86	**SI**	
	560	Sonic	86-14	**SI**	
DERBI					
	125	Mulhacen	07-07		**HF**
	125	Terra	07-07		**HF**
	250	RC	85-85	**HF**	
DUCATI					
	350		75-78	**HF**	

DUCATI					
	350	GTV	77-77	**HF**	**HF**
	350	Indiana	86-91		**HF**
	350	Paso	86-86	**HF**	**HF**
	350	Sport	77-80	**HF**	**HF**
	400	Monster (Japan)	01-06		**LS**
	400	SS, Junior	92-97		**HF**
	400	SS, Nuda	92-96		**HF**
	500	GTV	77-82	**HF**	**HF**
	500	Pantah	85-89	**HF**	**HF**
	500	Sport Desmo	77-82	**HF**	
	500	Twin GTL	75-80	**HF**	
	502	Single	93-93		**HF**
	502	Supermono	93-93		**HF**
	600	Monster	00-01		**LS**
	600	SL, TL Pantah	76-89		**HF**
	600	SS Supersport	95-00		**HF**
M	600	Monster	94-99		**HF**
	620	Monster Dark i.e.	02-06		**LS**
	620	Monster i.e., s i.e.	02-06		**LS**
	650	Indiana	86-89		**HF**
	695	Monster	07-12		**LS**
	748	, S	99-02		**LS**
	748	Biposto	95-98		**HF**
	748	R	00-02		**LS**
	748	SP	95-97		**HF**
	748	SPS	98-99		**LS**
	750	Indiana	85-86		**HF**
	750	Monster	96-99		**HF**
	750	Monster	00-01		**LS**
	750	Monster i.e.	02-02		**LS**
	750	Paso	86-88		**HF**
	750	SS Supersport	95-99		**HF**
	750	SS, Carenara	92-98		**HF**
	750	SS, Nuda	92-92		**HF**
	750	Super Sport	92-94		**HF**
	800	Monster Dark i.e., s i.e.	03-07		**LS**
	800	Monster i.e., s i.e.	03-07		**LS**

Brake Pad 1:1 Drawings, Compounds, Fitments

Applications for this part number continues on following page.

Available compounds **HF • DCC** **SBS 517**

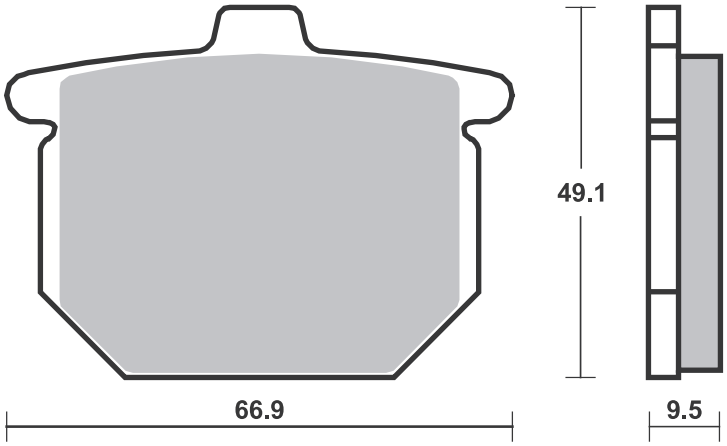

Available compounds **HF • LS • DCC • RQ • SI • RSI** **SBS 519**

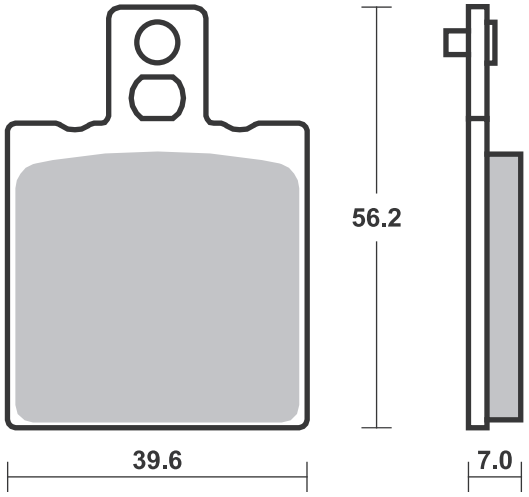

SBS 519 Recommended compound

DUCATI					
	800	Monster S2R	05-07		**LS**
	800	Monster S2R ABS	05-07		**LS**
	851	Strada	89-89		**HF**
	851	Superbike	90-90		**HF**
	888	SP V	93-93		**HF**
	888	SP4	92-95		**HF**
	888	SPO	93-93		**HF**
	888	SPS	92-95		**HF**
	888	Strada	93-93		**HF**
	888	Superbike	93-93		**HF**
	900	FE	97-98		**HF**
	900	M, IL Monster	93-99		**HF**
	900	Monster	00-01		**LS**
	900	Monster i.e.	02-02		**LS**
	900	SL	92-97		**HF**
	900	SS	90-94		**HF**
	900	SS Supersport	95-97		**HF**
	900	SSR	92-92		**HF**
906	900	Paso	89-89		**HF**
907	900	I. E.	90-93		**HF**
M	900	Street Monster	94-99		**HF**
MH	900		00-01		**LS**
	916	Biposto	94-98		**HF**
	916	Monster S4	01-03		**LS**
	916	SPS	97-98		**LS**
	996	, SPS	99-01		**LS**
	996	Monster S4R	04-06		**LS**
	996	R	01-01		**LS**
	998	, S	02-04		**LS**
	998	R	02-04		**LS**
	1000	Monster Dark i.e., s i.e.	03-06		**LS**
	1000	Monster i.e., s i.e.	03-06		**LS**
FANTIC					
	250	Coach	91-98	**HF**	
GILERA					
	50	Sioux	92-92	**HF**	**HF**
	125	Arizona Hawk	86-89	**HF**	
	125	Crono	92-95		**HF**
	125	Freestyle	92-95		**HF**
	125	HX, HE	83-83	**HF**	
	125	KK, KR, KZ	86-91		**HF**
	125	MX1, MRX, SP01	89-93		**HF**
	125	R1, R1S	90-92		**HF**
	125	SP02	90-94		**HF**
CX	125		91-95		**HF**
MXR	125		90-90		**HF**
	200	RX	83-83	**HF**	
	250	Arizona Hawk	86-91	**HF**	
	250	Arizona Rally	86-91	**HF**	
	250	Arizona Rally	08-08		**HF**
NGR	250		85-85		**HF**
	350	Saturno Bialbero	90-90		**HF**
XRT	350		90-90		**HF**
	500	Saturno Bialbero	90-90		**HF**
	500	Saturno Piuma	90-94		**HF**
	600	Nordwest	91-94		**HF**
RC	600		88-88		**HF**
XRT	600		89-89		**HF**

HUSQVARNA					
CR	125		85-90	**SI**	
CX	125		84-85	**SI**	
	200	Prof	86-86	**SI**	**SI**
CR	240		84-85	**SI**	
CR	250		85-87	**SI**	
CX	250		84-85	**SI**	
	400	Enduro	85-88	**SI**	
	430	Enduro	85-88	**SI**	
CR	500		86-87	**SI**	
CX/CR	500		84-85	**SI**	
TC	500		86-86	**SI**	
	504		83-83	**SI**	
TE	510		86-87	**SI**	
ISR CALIPERS					
2 Piston (22-027/028/029)					
4 Piston (22-025)					
ITALJET					
	350		83-83	**HF**	
KEEWAY					
	125	Enduro	07-08		**HF**
	125	X-Ray	07-08		**HF**
KTM					
LC	125		85-85	**SI**	
LC	125		86-86	**SI**	**SI**
MX	125		85-85	**SI**	
MX	125		86-86	**SI**	**SI**
XC	125		85-85	**SI**	
XC	125		86-89	**SI**	**SI**
	250	Baja	86-89	**SI**	
	250	Country,Baja	85-85	**SI**	
LC	250		85-85	**SI**	
LC	250		86-86	**SI**	**SI**
MC	250		83-84	**SI**	**SI**
MX	250		85-85	**SI**	
XC	250		85-85	**SI**	
XC	250		86-89	**SI**	**SI**
XC	300		85-85	**SI**	
XC	300		86-90	**SI**	**SI**
	350	Country Cross	85-85	**SI**	
	350	GS	83-85	**SI**	
GS4	350	500 K4	82-83	**SI**	
K4	350	500 K4	82-83	**SI**	
XC	350	, MC	81-83	**SI**	
	390	GS	83-83	**SI**	
XC	390	, MC	81-83	**SI**	
XC	420	, MC	81-83	**SI**	
MC	495	Leleu	82-83	**SI**	
MX	495	Leleu	82-83	**SI**	
GS	500	500 K4 Enduro	83-83	**SI**	
LC	500		85-85	**SI**	
LC	500		86-89	**SI**	**SI**
MX	500		85-85	**SI**	
MX	500		86-86	**SI**	**SI**
XC	500	, MC	81-83	**SI**	
4T	600	Enduro	84-86	**SI**	
GS	600		85-85	**SI**	
XC	600	Cross	85-85	**SI**	
XCE	600	Cross	85-85	**SI**	
	620	Duke	96-98		**HF**
	640	Duke	99-02		**HF**
LAVERDA					
GS	350	Lesmo	86-89	**HF**	**HF**

LAVERDA					
	500	Alpino, S	77-83	**HF**	**HF**
OR	600	Atlas	86-90		**HF**
	650		92-92		**HF**
	668	668	96-97		**HF**
	668	Ghost, Diamante	97-97		**HF**
	750	Cup	98-01		**HF**
	750	Diamante	97-01		**HF**
	750	Ghost Strike	97-01		**HF**
	750	S Formula	97-01		**HF**
	750	S, S Carenata	97-01		**HF**
	750	Sport	99-01		**HF**
	750	Strike/Black Strike	99-01		**HF**
	750	T8	98-01		**HF**
JOTA	1000		95-95		**HF**
MAICO					
GM	250	LC	85-85	**SI**	
MD	250		83-85	**SI**	**SI**
GM	500	LC	85-86	**SI**	
MALAGUTI					
	50	Enduro	85-87	**HF**	
MRX	50		89-89	**HF**	
RST	50		90-90	**HF**	**HF**
MOTO-GUZZI					
	125	Custom	85-85	**HF**	
	125	Enduro TT	85-85	**HF**	
BX	125		92-92	**HF**	**HF**
	240	/4	77-77	**HF**	
	250	TS	75-76	**HF**	
	350		77-81	**HF**	**HF**
	350	Falco	88-88	**HF**	**HF**
	350	Imola	78-84	**HF**	**HF**
	350	Nevada	92-97	**HF**	
NTX	350		88-88	**HF**	**HF**
NTX	350		90-90	**HF**	
V35	350	C	82-86		**HF**
V35	350	Florida	85-86		**HF**
V35	350	GT	77-77	**HF**	
V35	350	GT	90-90		**HF**
V35	350	II, Imola, Imola II	77-77	**HF**	**HF**
	400		77-84	**HF**	**HF**
	500		77-80	**HF**	**HF**
	500	Monza	78-85	**HF**	**HF**
V50	500	1,2,3, Monza Chopper	77-77	**HF**	**HF**
	650		80-84	**HF**	**HF**
	650	Florida	85-84	**HF**	**HF**
GT	650	Sessantacinque	89-89	**HF**	**HF**
NTX	650		90-02	**HF**	
V65	650	Lario	86-94	**HF**	**HF**
V65	650	NTX	87-02	**HF**	**HF**
V65	650	SP, Chopper	80-84	**HF**	**HF**
V65	650	TT	86-94	**HF**	**HF**
	750	Ippogrifo	97-97		**HF**
	750	Nevada	92-96	**HF**	
	750	Nevada, Club/Base	97-02	**HF**	**HF**
	750	Targa	89-89	**HF**	**HF**
NTX	750		89-89	**HF**	**HF**
RS	1000	Daytona	97-00		**HF**
V	1000	Strada	93-94		**HF**

Brake Pad 1:1 Drawings, Compounds, Fitments

Applications for this part number continues on following page.

Available compounds **HF • LS • DCC • RQ • SI • RSI** **SBS 519**

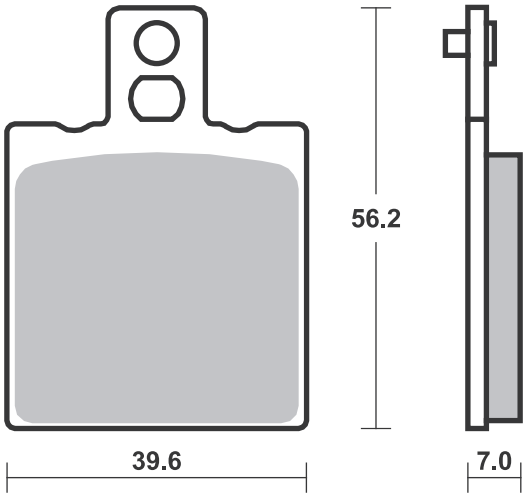

Dimensions in mm / Dimensions en mm • 1” = 25.4 mm , 1 mm = 0.04”

SBS 519 Recommended compound

MOTO-GUZZI					
V10	1000	Centauro	96-00		**HF**
	1100	Sport	96-04		**HF**
EV	1100	California	97-00		**HF**
EV	1100	California, 80,			
		Touring	01-01		**LS**
V11	1100	, Scura,			
		Sport Scura	02-05		**LS**
V11	1100	Lemans,			
		Lemans Tenni,			
		Lemans			
		Rosso Corsa	01-06		**LS**
V11	1100	Sport	97-00		**HF**
V11	1100	Sport Rosso			
		Mandell	01-06		**LS**
V11	1100	Sport,			
		Sport Naked	01-05		**LS**
MOTO-MORINI					
XE	250	Country	88-88	**HF**	
	350	Coguaro	90-95		**HF**
	350	Coguaro,			
		New York	90-94		**HF**
	350	Dart	88-88		**HF**
	350	Dart	90-92		**HF**
	350	Indiana	88-88		**HF**
	350	Kanguro	88-88		**HF**
RLX	350	Excalibur	90-92		**HF**
	400	Dart	89-92		**HF**
	400	S	82-82	**HF**	**HF**
	500	Sei V Classic	89-89	**HF**	
	501	Camel	88-88		**HF**
	501	Coguaro	89-89		**HF**

MOTO-MORINI					
	501	Excalibur	89-89		**HF**
	501	New York	89-89		**HF**
RLX	501	Excalibur	90-90		**HF**
	650	Indiana	88-88		**HF**
	750	Indiana	88-88		**HF**
MZ					
	660	(MUZ)			
		Skorpion Cup	99-99		**HF**
	660	(MUZ)			
		Skorpion			
		Replica	97-99		**HF**
	660	(MUZ)			
		Skorpion Sport	95-99		**HF**
	660	(MUZ)			
		Skorpion Tour	95-00		**HF**
	660	(MUZ)			
		Skorpion			
		Traveller	99-00		**HF**
REWACO					
		FX4	07-07	**HF**	
		FX5	07-07	**HF**	
		FX6	07-07	**HF**	
		HS4	01-01	**HF**	
		HS5	01-01	**HF**	
		HS6	01-01	**HF**	
		RF1	07-14	**HF**	

SBS 520 Recommended compound

BMW				
R60/7	600		76-77	**HF**
R75/6	750		74-76	**HF**
R75/7	750		76-77	**HF**
R80/7	800		77-81	**HF**
R90	900	S	73-76	**HF**
R90/6	900		73-76	**HF**
R100	1000	RS	76-80	**HF**
R100	1000	S	76-80	**HF**
R100	1000	T	79-84	**HF**
R100/7	1000		78-80	**HF**

Available compounds **HF • LS • DCC • RQ • SI • RSI** **SBS 519**

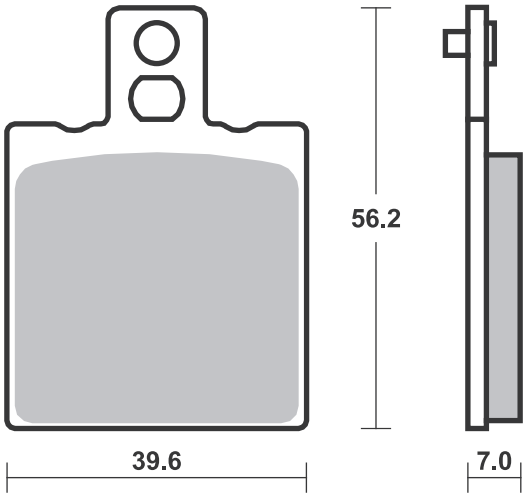

Available compounds **HF** **SBS 520**

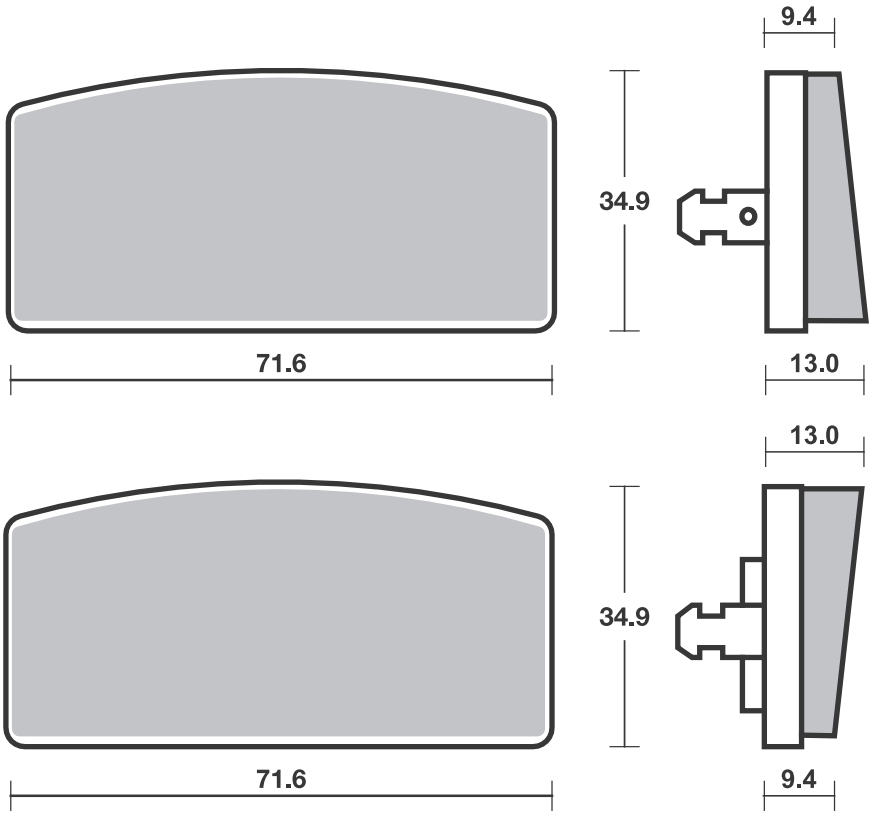

Dimensions in mm / Dimensions en mm • 1” = 25.4 mm , 1 mm = 0.04”

SBS 522 Recommended compound

KAWASAKI				
KZ	400		78-79 **HF**	

SBS 523 Recommended compound

A.P. RACING CALIPERS				
CP-2696-36E0/38E0				
CP-3696-2E0				
CP-3697-2E0				
CP-4638-2E0				
DUCATI				
	750	Sport	74-76 **HF**	
ISR CALIPERS				
2 Piston (22-030/033)				
TRIUMPH				
	750	Trident T160V	75-77 **HF**	**HF**
T140	750	D,E,F, V Bonneville	76-81 **HF**	**HF**
T140	750	ES Bonneville	81-83 **HF**	**HF**
TR65	750	Thunderbird	81-83 **HF**	

TRIUMPH				
TR7T	750	Tiger Trail	81-83 **HF**	
TR7V	750	Tiger	73-81 **HF**	**HF**
TSS	750		83-83 **HF**	**HF**
TSS	750	Electro Eight Valve	84-84 **HF**	
TSX	750		83-83 **HF**	**HF**

SBS 524 Recommended compound

HYOSUNG				
	125	Cruise II	99-06 **HF**	
	125	Cruise II Classic	99-06 **HF**	
	125	Cruiser	92-06 **HF**	
GA	125		98-06 **HF**	
GA	125	F	00-06 **HF**	
GF	125		98-04 **HF**	
GS	125		99-99 **HF**	
TN	125		92-95 **HF**	

Available compounds **HF** **SBS 522**

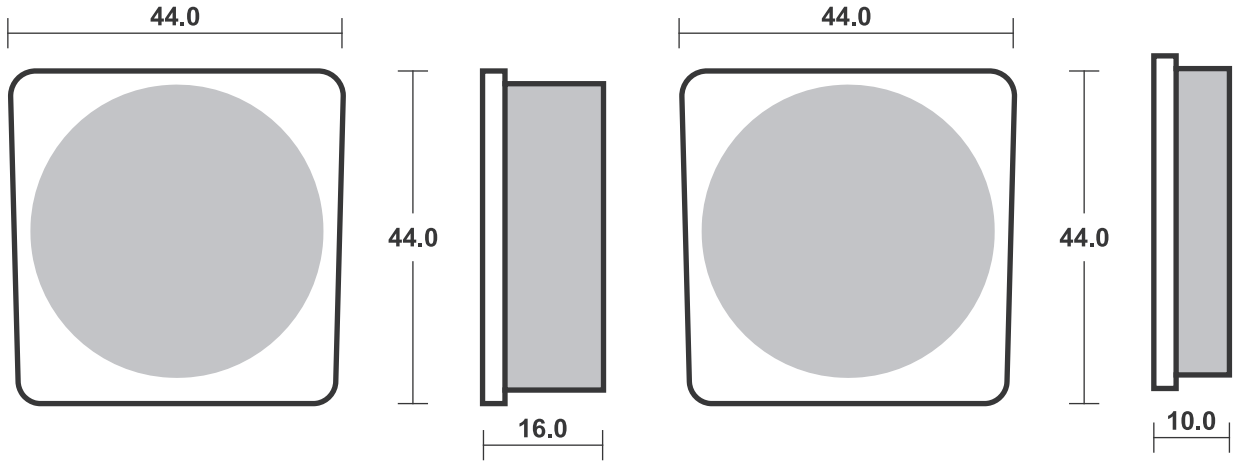

Available compounds **HF • DC • DCC** **SBS 523**

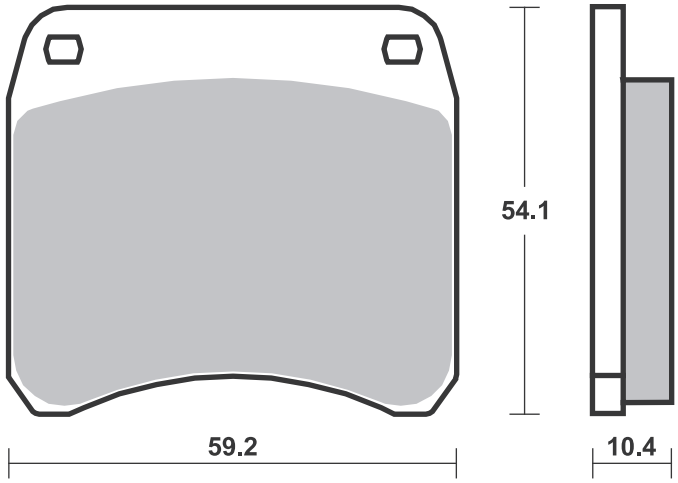

Available compounds **HF** **SBS 524**

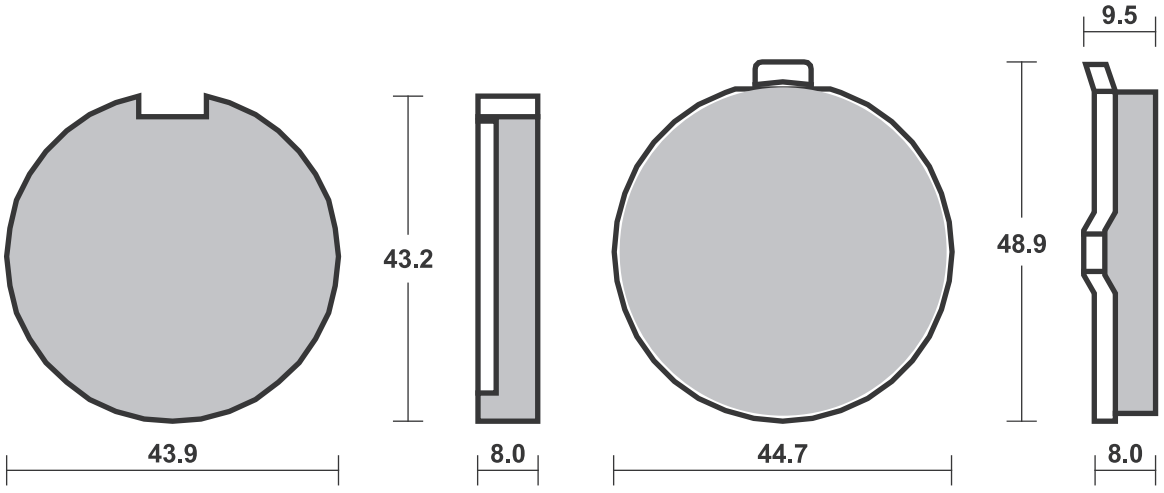

Dimensions in mm / Dimensions en mm • 1” = 25.4 mm , 1 mm = 0.04”

SBS 525 Recommended compound

HONDA			
MT	125 R	77-77 **HF**	
FL	250 Odyssey	77-84 **HF**	

SBS 526 Recommended compound

HONDA			
CB	400 A	77-81 **HF**	
CB	400 N, T, Hawk	78-82 **HF**	
CB	400 T1, T2	77-78 **HF**	
CM	400 A, T, TZ	79-79 **HF**	
CM	400 T	79-81 **HF**	
CB	650	79-81 **HF**	
CB	650 C	80-85 **HF**	
CB	650 Z	78-81 **HF**	
CB	750 C	80-81 **HF**	
CB	750 K, L	79-80 **HF**	
CB	750 PZ	81-84 **HF**	

SBS 527 Recommended compound

BMW			
R45	450	78-80 **HF**	
R45	450	80-85 **HF**	
R65	650	78-79 **HF**	

Available compounds **HF** **SBS 525**

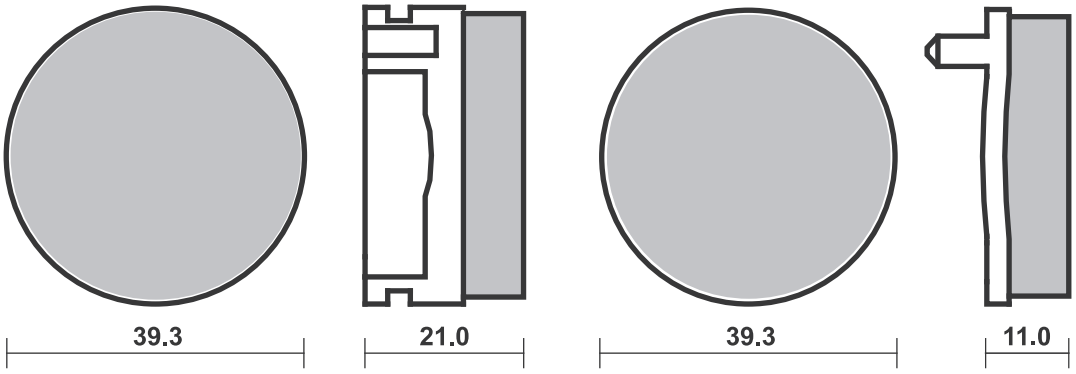

Available compounds **HF • DCC** **SBS 526**

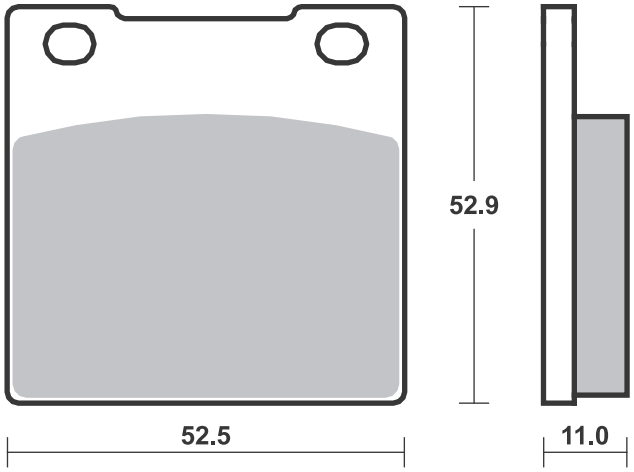

Available compounds **HF** **SBS 527**

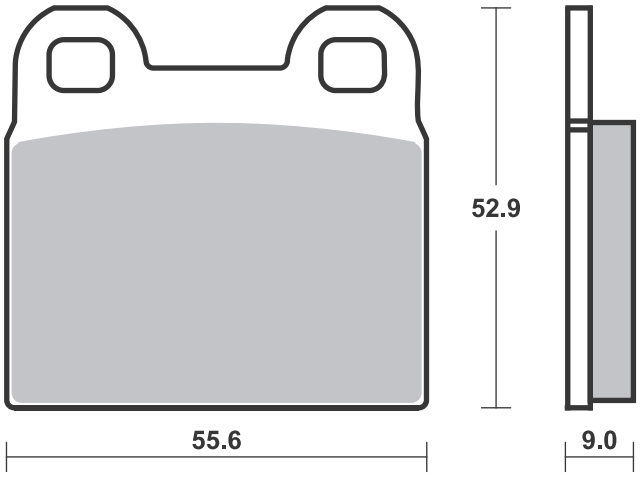

Dimensions in mm / Dimensions en mm • 1” = 25.4 mm , 1 mm = 0.04”

SBS 528 Recommended compound

YAMAHA					
RD	250		78-79	**HF**	**HF**
XS	250	SE, SF	80-81	**HF**	
XS	400	SE	80-81	**HF**	
XS	400	SG, SH, SF	80-81	**HF**	
XJ	650	G, H, SH	80-83	**HF**	
XS	750	SE	79-80	**HF**	
XV	750	MK	83-83	**HF**	
XS	850		81-81	**HF**	
XJ	1100		81-81		**HF**
XS	1100	LH Midnight	81-81		**HF**
XS	1100	SF, SG, SH, LG	79-81	**HF**	

SBS 529 Recommended compound

HONDA					
FL	250	Odyssey	84-84	**HF**	

Available compounds HF — SBS 528

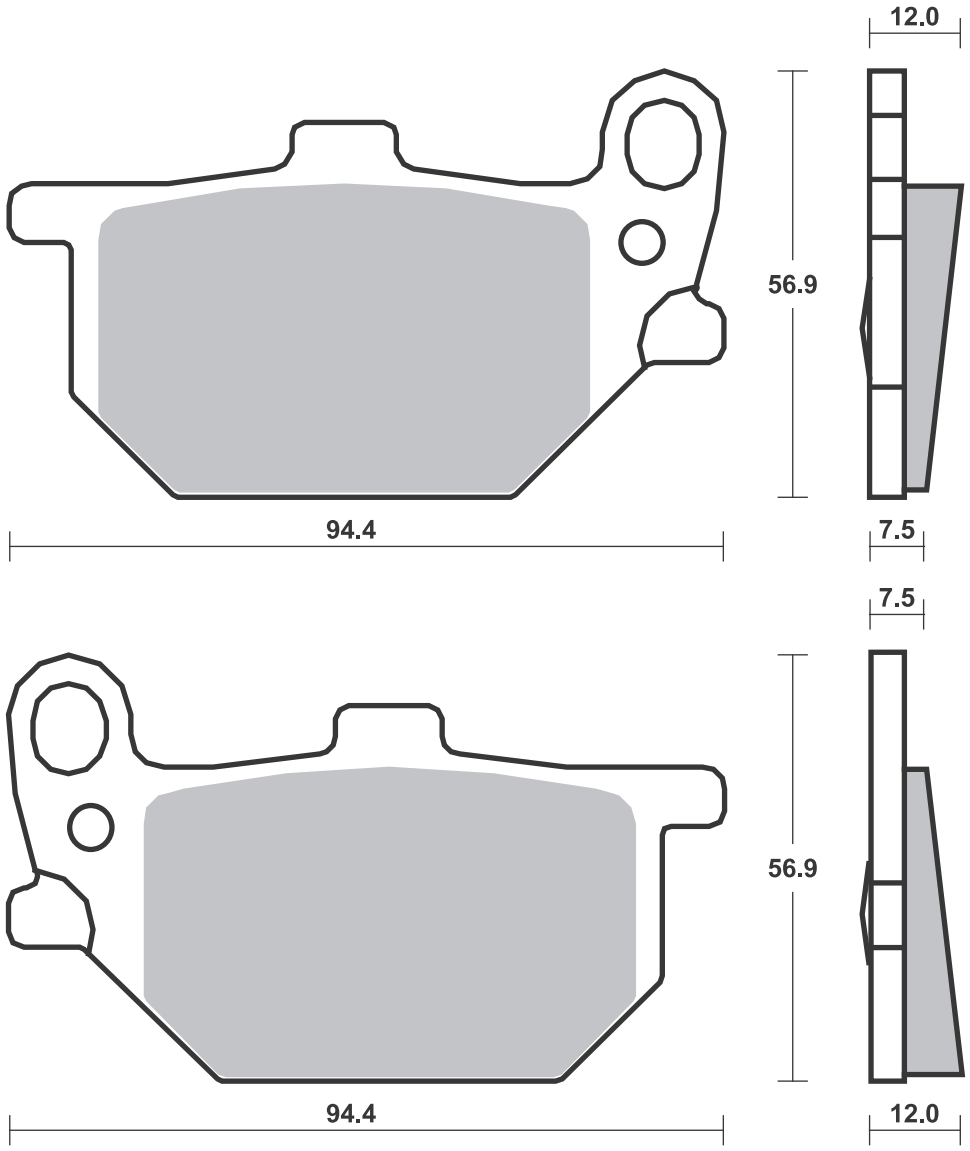

Available compounds HF — SBS 529

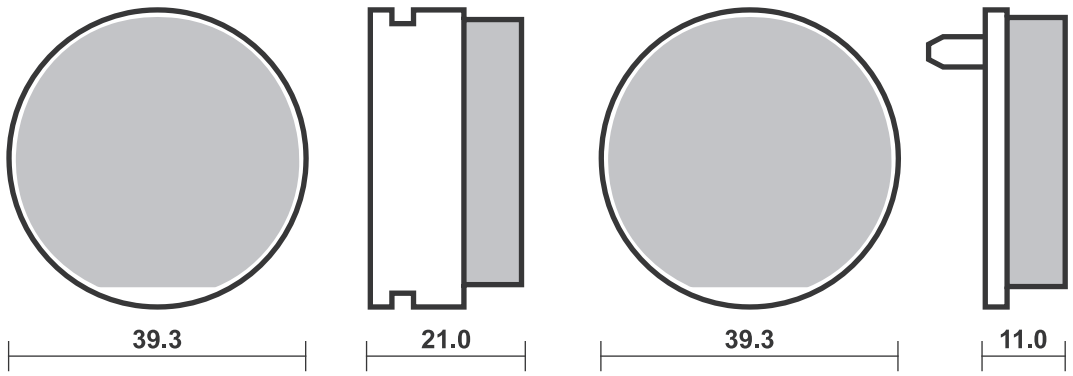

SBS 530 Recommended compound

KAWASAKI				
KZ	1300		79-81 **HF**	

SBS 532 Recommended compound

MALAGUTI				
	50	Chopper 25, 40, 80, Fifty	83-83 **HF**	
	50	Chopper HF, Watercooled	83-83 **HF**	
RCW	50	Ronco	83-83 **HF**	
V4	50	Olympique	83-83 **HF**	
XL	50	Sport	83-85 **HF**	
	125	Runner	86-86 **HF**	

SBS 533 Recommended compound

SUZUKI				
GN	250		86-97 **HF**	
GS	250		80-82 **HF**	
GN	400		80-80 **HF**	
GS	450		80-83 **HF**	
GS	700		85-85 **HF**	
GV	700	GLG Madura	86-86 **HF**	
GS	850		81-82 **HF**	
GS	850	G	83-86 **HF**	
GS	1000		80-81 **HF**	
GS	1100		82-83 **HF**	
GV	1200	GLG Madura	86-86 **HF**	

Available compounds **HF** **SBS 530**

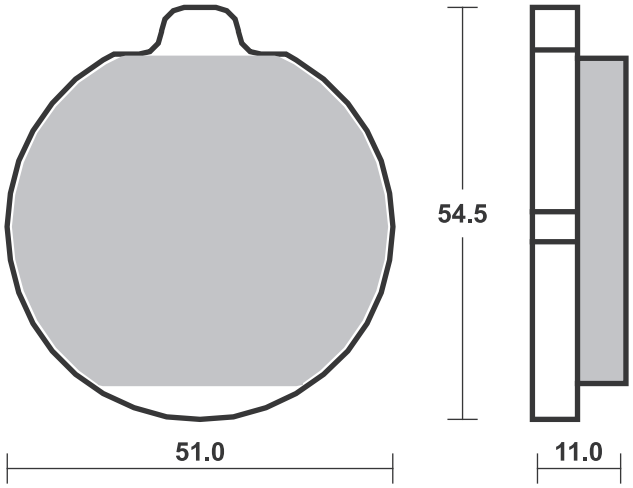

Available compounds **HF** **SBS 532**

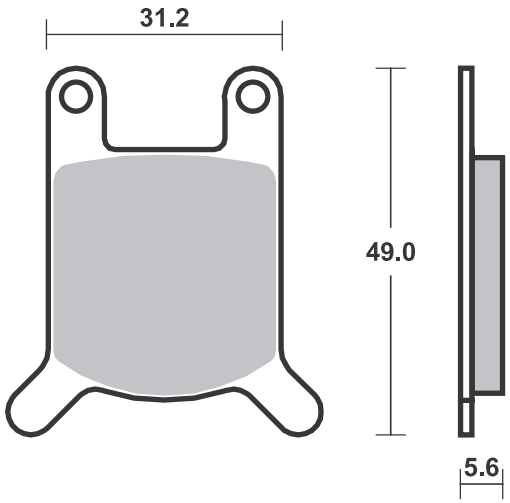

Available compounds **HF** **SBS 533**

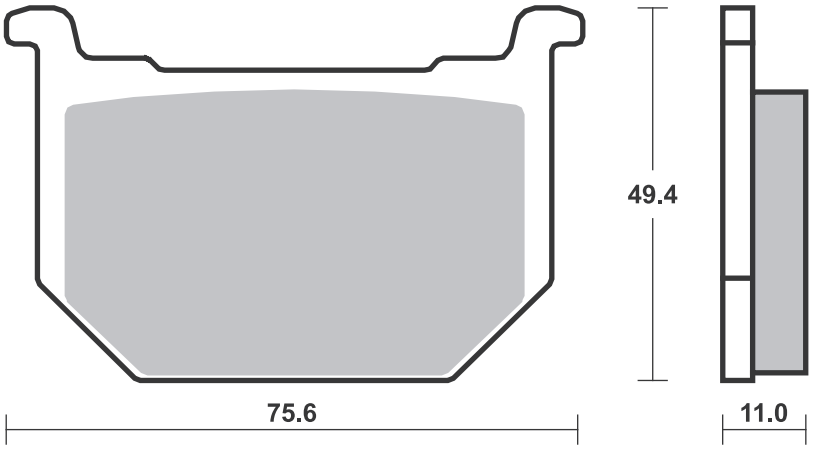

Dimensions in mm / Dimensions en mm • 1” = 25.4 mm , 1 mm = 0.04”

SBS 534 Recommended compound

SUZUKI				
GS	450		85-85	**HF**
GS	550		80-84	**HF**
GR	650		83-84	**HF**
GR	650	X	83-84	**HF**
GS	650		81-83	**HF**
GS	650	G	83-87	**HF**
GS	650	Turbo, XN	83-85	**HF**
GS	750	SD	83-83	**HF**
G	1000	SZ	82-82	**HF**
GS	1000	ET	81-81	**HF**
GS	1000	EX	81-81	**HF**
GS	1100		81-81	**HF**
GS	1100	ED, ESD, GD	83-83	**HF**
GS	1100	G	86-88	**HF**
GS	1100	GKD, SD, GLD	83-83	**HF**
GS	1100	L	79-79	**HF**
GT	1100		80-80	**HF**
GV	1400	Cavalcade	85-86	**HF**

SBS 536 Recommended compound

HONDA				
ATC	250	R	81-81	**SI**
HUSQVARNA				
		all models CR, TC,TE,WR	92-94	**SI**
HYOSUNG				
TE	400		05-06	**SI**
TE	450		07-11	**SI**
KAWASAKI				
KX	65		00-21	**RSI**
KLX	125		10-14	**HF**
KLX	125	D-Tracker	10-14	**HF**
Z	125	Pro	17-18	**HF**
Z	125	Pro KRT Ed.	18-18	**HF**
Z	125	Pro KRT SE	18-18	**HF**
KLX	150	D-Tracker	16-18	**HF**
KLX	150	L	14-15	**HF**
KVF	300	Prairie	99-02	**SI**
KVF	300	Prairie 4x4	99-05	**SI**
KVF	360	Prairie 2x4, 4x4	03-08	**SI**
KVF	400	Prairie	97-98	**SI**
KVF	400	Prairie 2x4	99-01	**SI**
KVF	400	Prairie 4x4	99-02	**SI**
SUZUKI				
RM	65		03-06	**RSI**
DR	125		86-02	**HF**
RH	125	X	87-87	**HF**
SP	125		86-88	**HF**
TS	125		85-89	**HF**
DR	200		86-88	**SI**
DR	200	S	15-17	**SI**
DR	200	SE	96-13	**SI**
DR	200	T	96-96	**SI**
SP	200		86-88	**HF**
DR	250		85-89	**HF**
LT-F	250	Ozark	03-13	**SI**
LT-Z	250	Quad Sport	04-11	**SI**
RH	250		85-87	**HF**
SP	250		85-85	**HF**
LT-A	400	Eiger 2WD/4WD	02-07	**SI**
LT-F	400	Eiger 2WD/4WD	02-07	**SI**
LT-A	500	F Vinson	02-02	**SI**
YAMAHA				
YFS	200	R Blaster	03-06	**SI**
YFM	250	AN Bruin 2x4	05-07	**SI**
YFM	250	Bear Tracker	01-04	**SI**
YFM	300	Warrior	89-89	**SI**
YFM	350	Bruin 2x4, 4x4	04-07	**SI**
YFM	350	FWB L, LC Big Bear	99-99	**SI**
YFM	350	FXG-FXM Wolverine	95-11	**SI**
YAMAHA				
YFM	350	XG,XH Warrior	95-96	**SI**
YFM	350	XW, XA-M Warrior	89-07	**SI**
YFZ	350	Banshee	90-06	**SI**
YFM	400	FAM Kodiak	00-02	**SI**
YFM	400	FAR Kodiak Automatic	03-03	**SI**
YFM	400	FWN Big Bear 4WD	00-11	**SI**
YFM	400	FWNH Big Bear-Buckmaster 4WD	00-11	**SI**
YFM	400	N Big Bear 2WD	00-11	**SI**
YFM	450	FA Kodiak	03-07	**SI**
YFM	450	Wolverine	06-10	**SI**

Available compounds **HF • DCC** **SBS 534**

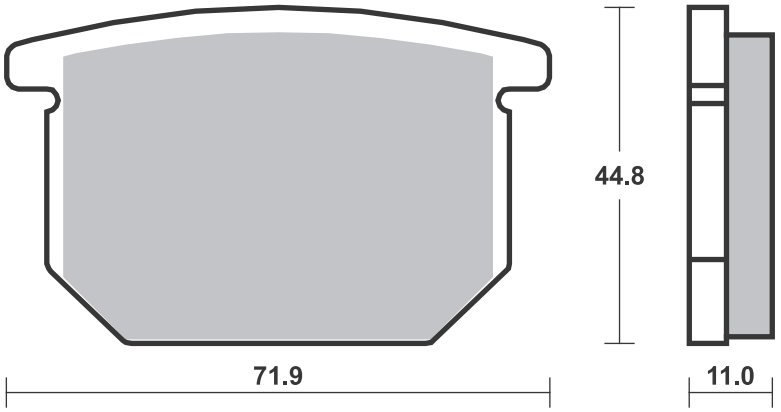

Available compounds **HF • SI • RSI** **SBS 536**

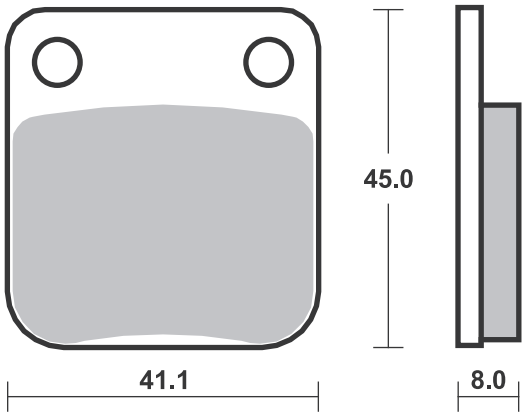

SBS 537 Recommended compound

HARLEY DAVIDSON					
XLH	883		70-83	**H.HF**	
XL	1000		78-78	**H.HF**	
XLCH	1000		78-80	**H.HF**	
XLH	1000	Sportster	79-85	**H.HF**	
XLS	1000	Anniversary	82-82	**H.HF**	
XLS	1000	Roadster	79-82	**H.HF**	
XLS	1000	Sportster	83-83	**H.HF**	
XLX	1000	61	83-84	**H.HF**	
XR	1000		85-85	**H.HF**	
FX	1200		74-80	**H.HF**	
FXE	1200		74-80	**H.HF**	
FXS	1200		78-79	**H.HF**	
FLHT	1340	Tour Glide	84-84	**H.HF**	
FXB	1340	80	80-81	**H.HF**	
FXB	1340	Sturgis	82-82	**H.HF**	
FXE	1340		82-82	**H.HF**	
FXE	1340	80	78-81	**H.HF**	

HARLEY DAVIDSON					
XLH	883		70-83	**H.HF**	
FXE	1340	Super Glide	83-84	**H.HF**	
FXEF	1340	80 Fat Bob	79-81	**H.HF**	
FXR	1340		78-81	**H.HF**	
FXR	1340	Super Glide	82-83	**H.HF**	
FXRS	1340	Low Glide	82-84	**H.HF**	
FXRS	1340	Super Glide II	82-83	**H.HF**	
FXRT	1340	Super Glide II	83-83	**H.HF**	
FXS	1340	80	79-81	**H.HF**	
FXS	1340	Low Rider	82-82	**H.HF**	
FXSB	1340	Low Rider	83-83	**H.HF**	
FXWG	1340	80	80-81	**H.HF**	
FXWG	1340	Wide Glide	82-84	**H.HF**	

SBS 539 Recommended compound

KAWASAKI					
KZ	440	H	82-84	**HF**	
KZ	650		81-84	**HF**	
KZ	650	F	81-84	**HF**	
KZ	700		83-88	**HF**	
GPZ	750		82-82	**HF**	
KZ	750		84-86	**HF**	
KZ	750	, LTD	80-81	**HF**	
KZ	750	E	80-81	**HF**	
KZ	750	GT	82-85	**HF**	
KZ	750	L	80-82	**HF**	
KZ	750	LTD Belt Drive	83-85	**HF**	
KZ	750	LTD Twin	82-82	**HF**	
KZ	750	Sp.	83-84	**HF**	
KZ	750	Y1, N, LTD	82-85	**HF**	
KZ	1000		87-01	**HF**	

KAWASAKI					
KZ	1000	F1	80-82	**HF**	
KZ	1000	J	79-83	**HF**	
KZ	1000	K, M, CSR	81-84	**HF**	
KZ	1000	LTD	81-84	**HF**	
KZ	1000	MKII	79-80	**HF**	
KZ	1000	Police	82-01	**HF**	
KZ	1000	ST	79-81	**HF**	
GPZ	1100		81-82	**HF**	
KZ	1100	, Spectre	82-83	**HF**	
KZ	1100	GP	81-81	**HF**	
KZ	1100	L1, LTD	83-83	**HF**	

SBS 540 Recommended compound

KAWASAKI					
KZ	305		81-88	**HF**	
KZ	440		83-83	**HF**	
KZ	440	, LTD	83-85	**HF**	
KZ	440	C, Twin	81-83	**HF**	
KZ	440	H	82-84		**HF**
KZ	550		81-83	**HF**	**HF**
KZ	650	, CSR	81-82	**HF**	
KZ	700		83-88		**HF**
GPZ	750		82-82		**HF**
KZ	750		84-86		**HF**
KZ	750	, LTD	80-81		**HF**
KZ	750	E	80-81		**HF**
KZ	750	GT	82-85		**HF**
KZ	750	L	80-82		**HF**
KZ	750	L	84-86	**HF**	**HF**
KZ	750	L3	83-83	**HF**	**HF**
KZ	750	LTD Belt Drive	83-85		**HF**

KAWASAKI					
KZ	750	LTD Twin	82-82		**HF**
KZ	750	M1	82-85	**HF**	
KZ	750	R1	82-82	**HF**	**HF**
KZ	750	Sp.	83-84		**HF**
KZ	750	Y1, N, LTD	82-85		**HF**
Z	750		84-86		**HF**
KZ	1000		87-01		**HF**
KZ	1000	J	79-83		**HF**
KZ	1000	K, M, CSR	81-84		**HF**
KZ	1000	LTD	81-84		**HF**
KZ	1000	Police	82-01		**HF**
KZ	1000	RE1, R2	82-84	**HF**	**HF**
GPZ	1100		81-82		**HF**
KZ	1100	, Spectre	82-83		**HF**
KZ	1100	GP	81-81		**HF**
KZ	1100	L1, LTD	83-83		**HF**

Available compounds **H.HF • H.CT** **SBS 537**

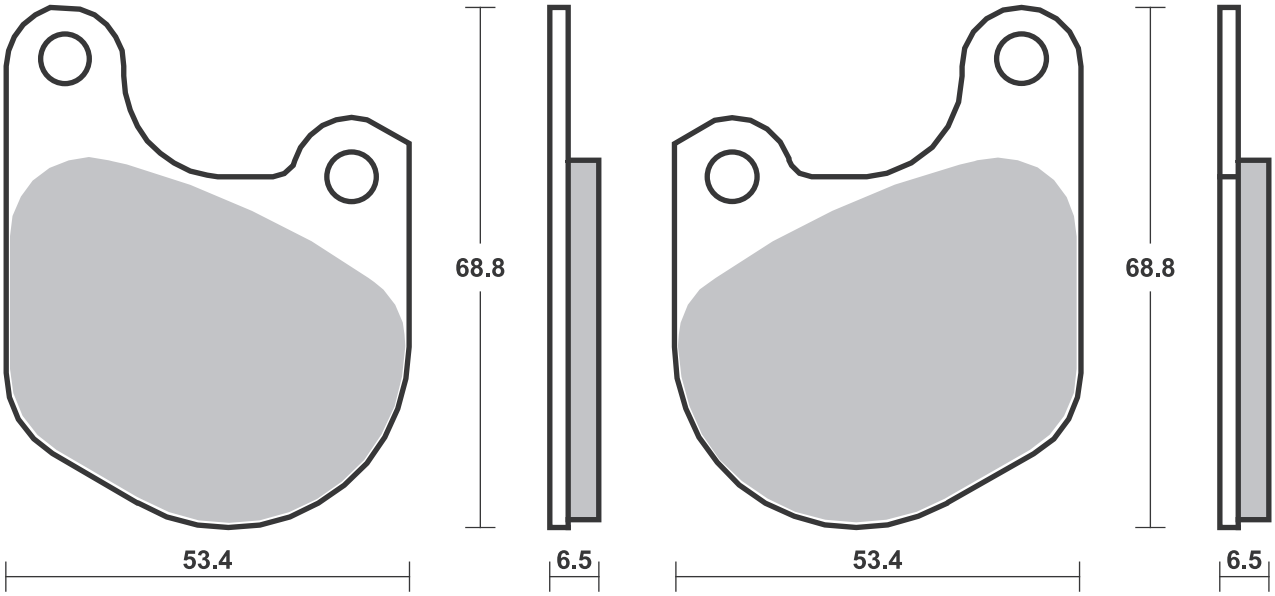

Available compounds **HF • DCC** **SBS 539**

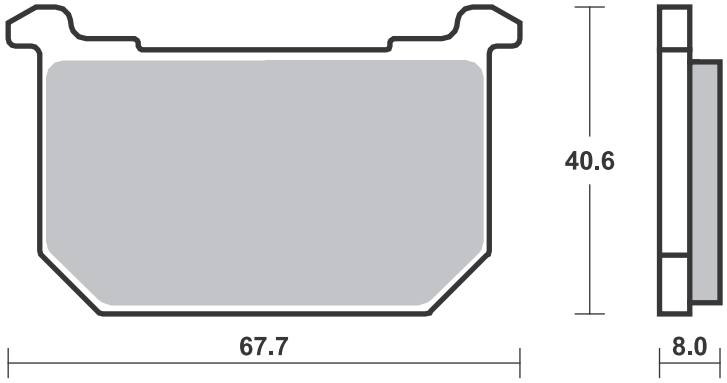

Available compounds **HF** **SBS 540**

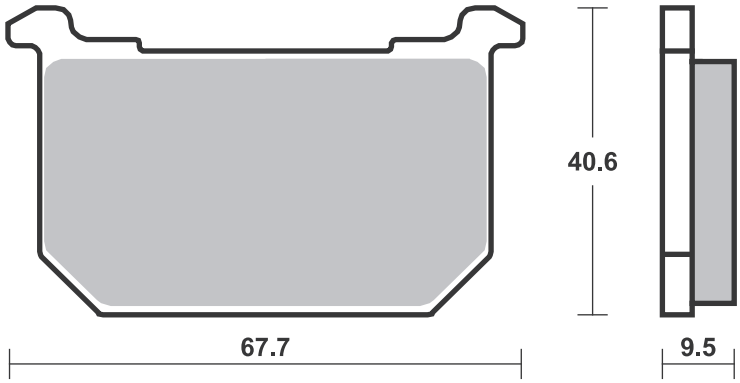

SBS 541 Recommended compound

MALAGUTI				
MEX	50	86-87	**HF**	
MFX	50	86-87	**HF**	
MGX	425 Ronco	87-11	**HF**	

SBS 542 Recommended compound

HONDA				
CB	400	81-82	**HF**	**HF**
CB	400 Hawk	81-85	**HF**	**HF**
CM	400 T	82-84	**HF**	
CM	450 A, C	82-86	**HF**	
CMX	450 Rebel	86-88	**HF**	
CX	500 C	81-82	**HF**	
CX	500 Silver W., Turbo	83-85	**HF**	**HF**
CX	500 Turbo	82-83	**HF**	
FT	500	82-84	**HF**	**HF**
GB	500 T.T.	88-92	**HF**	
GL	500	82-82		**HF**
GL	500 D	81-82	**HF**	
VF	500 F, FII	84-86	**HF**	**HF**
VT	500 C Shadow	83-86	**HF**	
CB	550 SC	83-84	**HF**	
CBR	600 F Hurricane	87-90		**LS**
XL	600 V, Transalp	87-90	**HS**	
CB	650	85-85	**HF**	
CB	650 SC Nighthawk	83-85	**HF**	
CX	650 C	83-86	**HF**	
CX	650 E	83-86		**HF**
CX	650 Turbo	83-86	**HF**	**HF**
GL	650 D	83-84	**HF**	
CB	700 SC	84-86	**HF**	
VF	700 C Magna	84-84	**HF**	
VF	700 C Magna	87-87	**HF**	
VF	700 F Interceptor	84-85		**HF**
VF	700 S	84-85	**HF**	
VFR	700 F, F2	86-87		**LS**
VT	700 C, Shadow	87-87	**HF**	
CB	750 C	82-84	**HF**	
CB	750 C, F, FII, K	85-86	**HF**	
CB	750 F	81-82	**HF**	**HF**
CB	750 K	81-82	**HF**	**HF**
CB	750 KZ	82-82	**HF**	
VF	750 C	82-84	**HF**	
VF	750 C, Magna	88-93	**HF**	
VF	750 F	83-84	**HF**	**HF**
VF	750 Sport	82-83	**HF**	
VFR	750 F	86-87		**LS**
VT	750 C, Shadow	86-96	**HF**	
VT	800 C	88-94	**HF**	
CB	900 C	82-82	**HF**	**HF**
CB	900 F, F2	81-84		**HF**
CB	1000 C	83-84	**HF**	**HF**
CBR	1000 F	87-88		**LS**
CBX	1000	81-82		**HF**
VF	1000 F, FII	84-86	**HF**	**HF**
VF	1000 R	84-87	**HF**	
VF	1000 R	86-86	**HF**	**HF**
CB	1100 F	83-85	**HF**	**HF**
GL	1100 -1, DLX Gold Wing	81-87	**HF**	**HF**
GL	1100 Gold Wing	82-83		**HF**
VF	1100 C	83-86		**HF**
VF	1100 S	84-85		**HF**
VT	1100 C Shadow	87-93	**HF**	
GL	1200 A, I Gold Wing	84-86		**HF**
GL	1200 DX Gold Wing	86-87		**HF**
GL	1200 Gold Wing	84-86		**HF**
GL	1500 Gold Wing Aspencade, Interstate, SE	94-00		**LS**
HONDA				
GL	1500 Gold Wing, Gold Wing SE	88-99		**LS**
SYM				
	110 Bullet	93-93	**HF**	
	125 Aero Wolf	02-02	**HF**	

Available compounds **HF** **SBS 541**

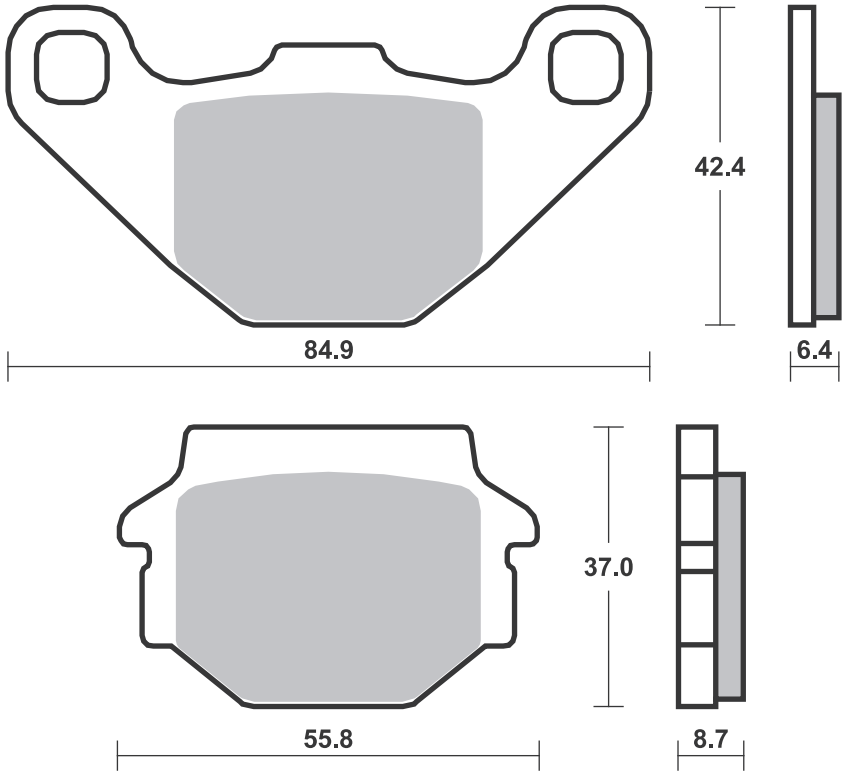

Available compounds **HF • HS • LS • DCC • RQ** **SBS 542**

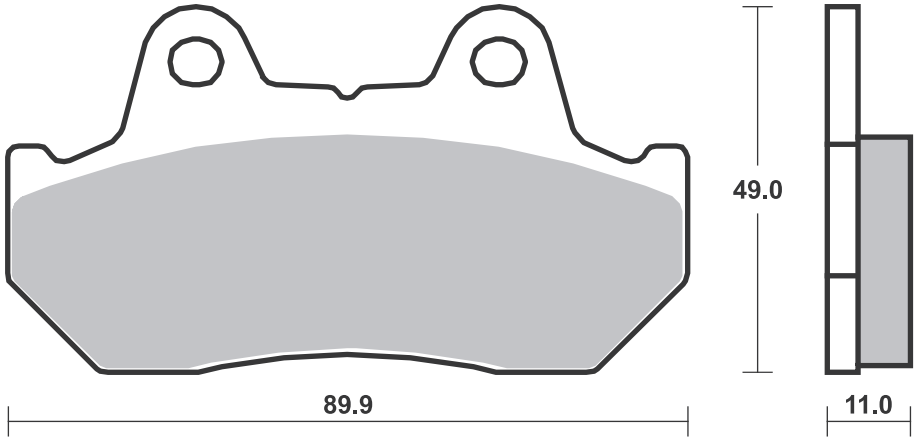

SBS 543 Recommended compound

HARLEY DAVIDSON					
XL	1000		78 - 78		**H.HF**
XLCH	1000		78 - 80		**H.HF**
XLH	1000	Sportster	79 - 82		**H.HF**
XLS	1000	Roadster	79 - 82		**H.HF**
FLH	1340	Classic	82 - 83	**H.HF**	
FLH	1340	Electra Glide	82 - 83	**H.HF**	
FLH	1340	Heritage	81 - 81	**H.HF**	
FLT	1340	80	80 - 81	**H.HF**	
FLT	1340	80 Classic	81 - 81	**H.HF**	
FLT	1340	Classic	82 - 83	**H.HF**	
FLT	1340	Tour Glide	82 - 82	**H.HF**	

Available compounds **H.HF • H.CT** **SBS 543**

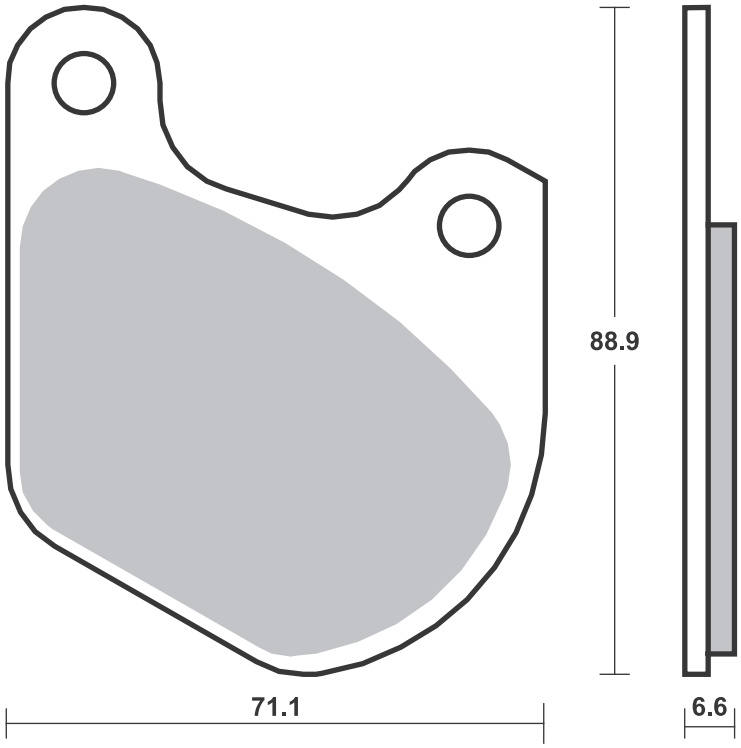

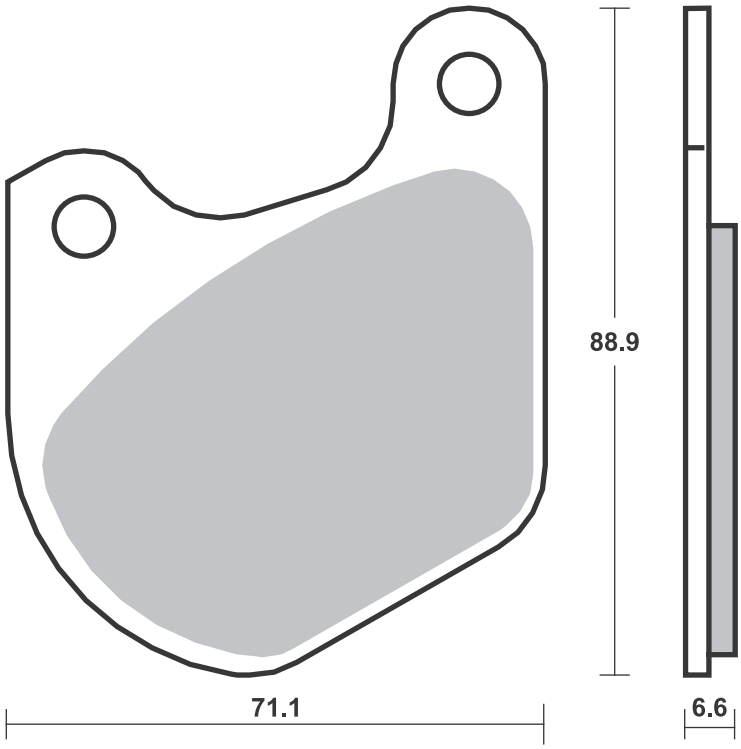

SBS 544 Recommended compound

ADLY					
	150	ATV	05-07	**SI**	**SI**
	150	Interceptor	05-07	**SI**	**SI**
	300	ATV	05-11	**SI**	**SI**
APRILIA					
	125	Tuono ABS	17-19		**HF**
RS	125	GP	17-19		**HF**
RS-4	125	(J.Juan cal.)	11-19		**HF**
RS-4	125	Replica, ABS	16-19		**HF**
BOMBARDIER					
	200	Rally 2x4	03-06	**SI**	
CAN-AM					
DS	90	X	08-18	**SI**	**SI**
CECTEK					
	500	EFI Gladiator	09-13		**HF**
	500	EFI King Cobra	09-13		**HF**
	500	EFI Quadrift	09-11		**HF**
	500	i Estoc	10-10		**HF**
CPI					
XS	250	Quad	06-08	**SI**	
DERBI					
DXR	200	Quad			
		(Front disc)	04-07	**SI**	
DXR	250	Quad			
		(Front disc)	04-07	**SI**	
E-TON					
VXL	250	Vector,			
		ST Vector	06-07	**SI**	
VTX	300	Vortex,			
		ST Vortex	07-07	**SI**	
VXL	300	Vector,			
		ST Vector	07-13	**SI**	
HYOSUNG					
GD	125	EXIV	12-16		**HF**
KAWASAKI					
AR	50		81-82	**HF**	
KD	80		88-90	**HF**	
KX	80		84-87	**SI**	
KX	80		88-96	**RSI**	
KX	100		88-96	**RSI**	
KX	125		82-82	**SI**	
KX	250		82-82	**SI**	
KXT	250	Tecate	84-84		**HF**
POLARIS					
	200	Phoenix	05-09	**ATS**	
	200	Sawtooth	06-07	**ATS**	**ATS**
SUZUKI					
RM	80		90-95		**SI**
RM	80		96-01		**RSI**
RM	85		02-04		**RSI**
TM					
	80	Junior	96-00	**RSI**	
YAMAHA					
YFM	300	Grizzly	12-13	**SI**	

ZERO				
DS	ZF6.0	10-12		**HF**
DS	ZF9.0	10-12		**HF**
MX		10-12		**HF**
S	ZF6.0	10-12		**HF**
X		10-12		**HF**
XU		11-12		**HF**

Available compounds **HF • CS • SI • RSI • ATS** **SBS 544**

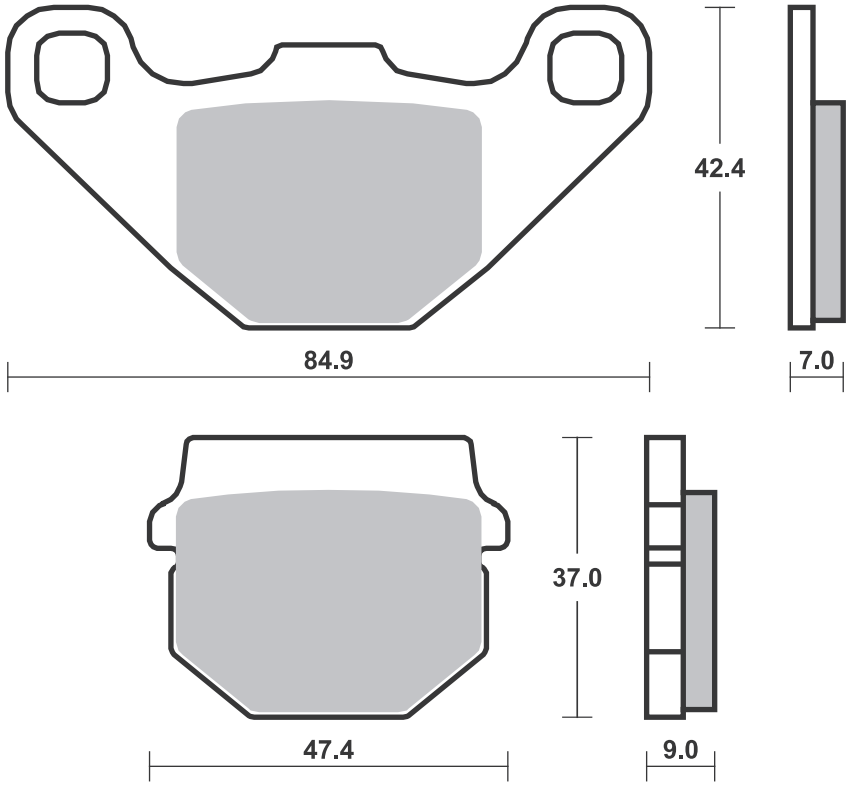

Dimensions in mm / Dimensions en mm • 1” = 25.4 mm , 1 mm = 0.04”

SBS 545 Recommended compound

YAMAHA				
XS	400	SE	80-81	**HF**
XJ	650	G, H, SH	80-83	**HF**
XS	650		80-82	**HF**
XS	750	H, J, K	81-82	**HF**
XS	750	SE	79-80	**HF**
XV	750	SE	81-83	**HF**
XS	850		81-81	**HF**
XV	920	K, MK, Virago	83-83	**HF**
XS	1100	SF, SG, SH, LG	79-81	**HF**

Available compounds **HF** **SBS 545**

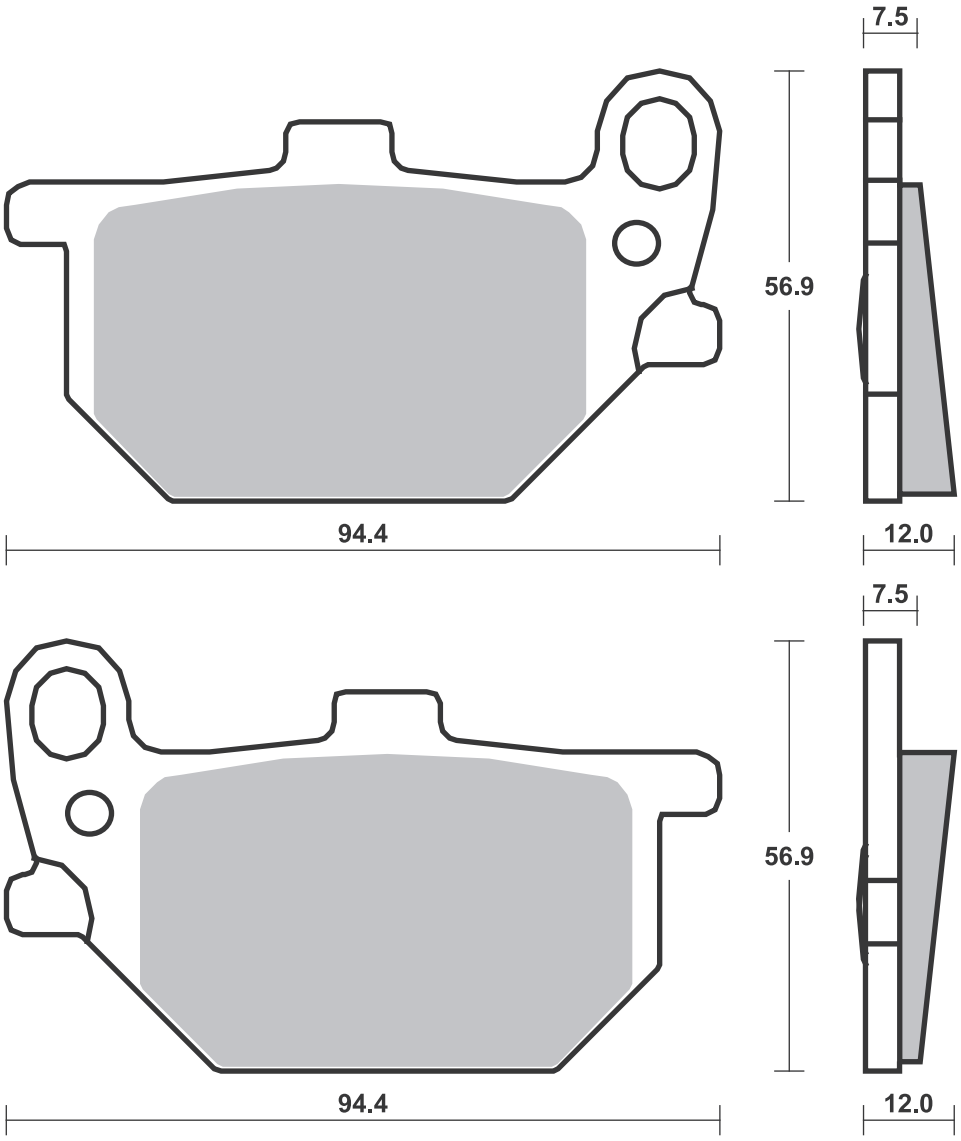

Dimensions in mm / Dimensions en mm • 1” = 25.4 mm , 1 mm = 0.04”

SBS 546 Recommended compound

BOMBARDIER				
	200	Rally 2x4	05-06	**SI**
KAWASAKI				
KE	125		86-91	**HF**
KX	125		83-85	**SI**
KX	125		86-86	**RSI**
KDX	200	C	86-88	**SI**
KDX	200	SR	89-92	**SI**
KL	250	(KLR 250)	85-97	**HF**
KLR	250		84-05	**HF**
KX	250		83-85	**SI**
KX	250		86-86	**RSI**
KXT	250	Tecate	85-86	**SI**
KLF	300	Bayou	88-04	**SI**
KX	500		83-85	**SI**
KX	500		86-86	**RSI**
ZR	550	A1, GP	83-84	**HF**
KL	600		84-86	**HF**
KLR	600		84-86	**HF**
KLR	600	E	85-94	**HF**
KTM				
GS	125		89-90	**SI**
MX	125		89-90	**SI**
GS	250		89-90	**SI**
MX	250		89-90	**SI**
MX	300		90-90	**SI**
LC4	350		92-95	**SI**
MX	500		89-91	**SI**

LAVERDA				
	700	El Cid	90-90	**HF**
POLARIS				
	200	Phoenix	05-14	**SI**
SUZUKI				
GN	125		91-04	**HF**
GT	125		80-82	**HF**
GS	450		86-86	**HF**

SBS 547 Recommended compound

YAMAHA				
RD	50	MX	81-87	**HF**
XJ	550	Maxim	81-83	**HF**
XJ	550	Seca	81-83	**HF**
XZ	550		82-82	**HF**
	750	Maxim	81-81	**HF**
XJ	750	Seca	81-83	**HF**
XV	920	J	82-82	**HF**
	1100	SE, Maxim	81-81	**HF**
XJ	1100		81-81	**HF**
XS	1100	LH Midnight	81-81	**HF**

Available compounds **HF • HS • SI • RSI** **SBS 546**

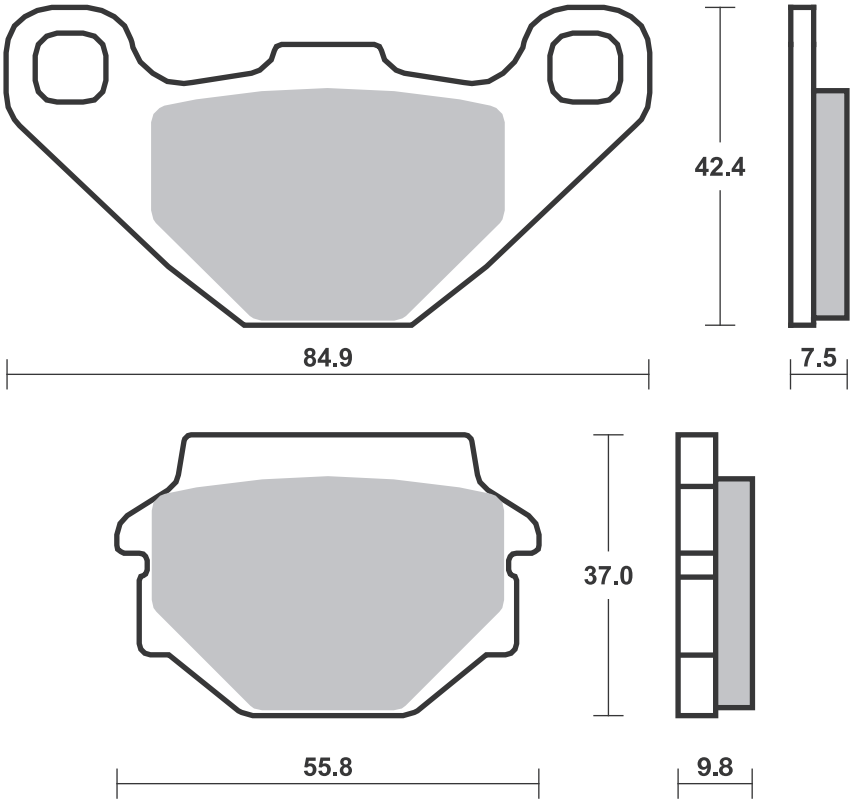

Available compounds **HF • DCC** **SBS 547**

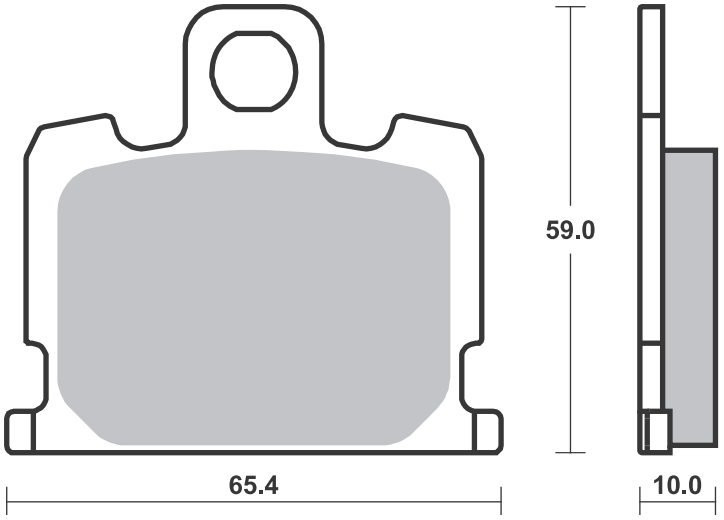

SBS 548 Recommended compound

SUZUKI				
RM	80		86-95	**HF**

SBS 549 Recommended compound

HARLEY DAVIDSON				
XLH	883	Sportster	85-86	**H.HF**
XLH	1000	Sportster	83-85	**H.HF**
XLS	1000	Anniversary	82-82	**H.HF**
XLS	1000	Sportster	83-83	**H.HF**
XLX	1000	61	83-84	**H.HF**
XR	1000		85-85	**H.HF**
XLH	1100	Sportster	85-86	**H.HF**
XLX	1100		86-86	**H.HF**
FLHT	1340	Electra Glide	85-86	**H.HF**
FLHTC	1340	Electra Glide		
		Classic	85-86	**H.HF**
FLST	1340	Heritage Softail	86-87	**H.HF**
FLTC	1340	Tour Glide		
		Classic	85-86	**H.HF**
FXE	1340		85-86	**H.HF**
FXR	1340	Super Glide	82-83	**H.HF**
FXR	1340	Super Glide	85-86	**H.HF**
FXRD	1340	Sport Glide		
		GTE	85-86	**H.HF**
FXRS	1340	Low Glide	82-84	**H.HF**
FXRS	1340	Low Rider	85-86	**H.HF**
FXRS	1340	Super Glide II	82-83	**H.HF**
FXRT	1340	Sport Glide	85-86	**H.HF**
FXRT	1340	Super Glide II	83-83	**H.HF**
FXSB	1340	Low Rider	83-83	**H.HF**
FXST	1340	Softail	84-86	**H.HF**
FXSTC	1340	Softail Custom	85-86	**H.HF**
FXWG	1340	Wide Glide	83-86	**H.HF**

Available compounds **HF** **SBS 548**

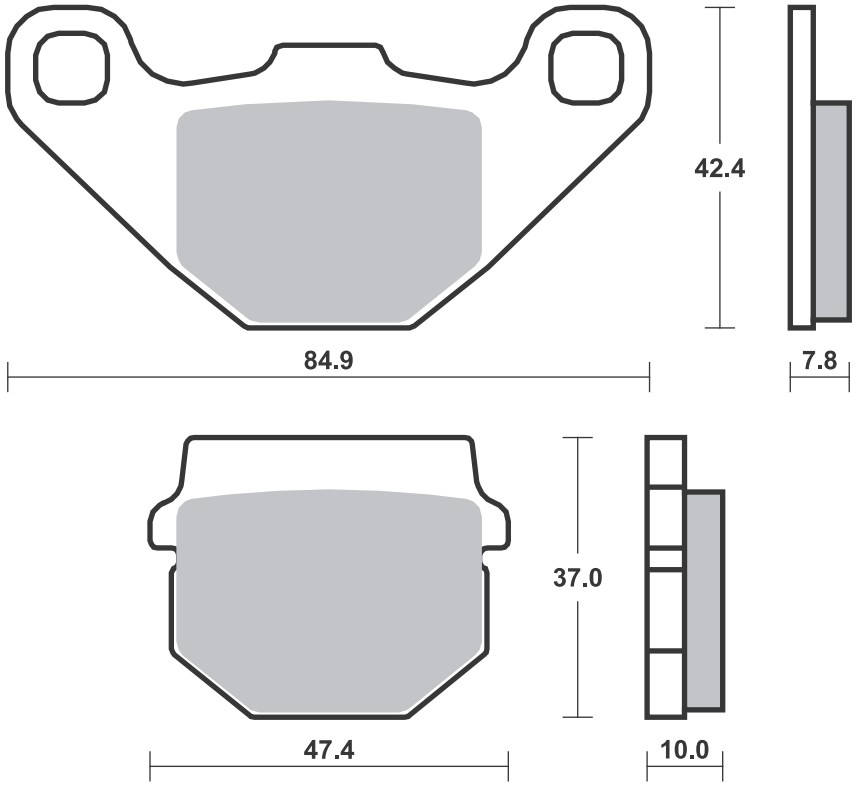

Available compounds **H.HF • H.CT** **SBS 549**

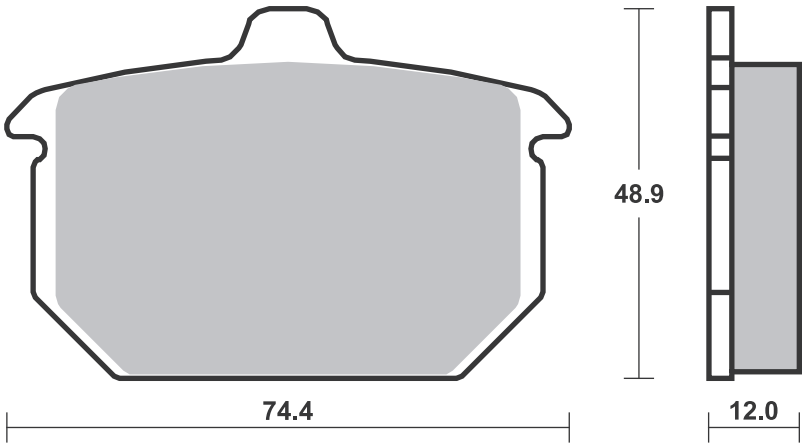

SBS 550 Recommended compound

YAMAHA				
XV	250	Route 66	88-90	**HF**
XV	250	Virago	88-88	**HF**
RZ	350		84-85	**HF**
XS	400		82-85	**HF**
XS	400	DOHC	82-82	**HF**
XV	500	K, Virago	83-83	**HF**
XV	500	SE	83-83	**HF**
XZ	550		83-84	**HF**
XZ	550	RJ, RK	82-83	**HF**
XZ	550	S	83-84	**HF**
XT	600		83-86	**HF**
XJ	650		83-83	**HF**
XJ	650	Turbo	81-82	**HF**
XJ	750	Maxim	82-82	**HF**
XV	920	K, MK, Virago	83-83	**HF**

SBS 551 Recommended compound

HONDA				
CMX	250	Rebel	85-12	**HF**
HYOSUNG				
	125	Grand Prix Plus	02-05	**HF**
GT	125	Comet	02-03	**HF**
GV	125	Aguila	02-04	**HF**
RT	125	Karion	02-06	**HF**
RX	125		00-07	**HF**
XRX	125	Offroad	99-06	**HF**
GV	250		02-09	**HF**
XRX	400		05-08	**HF**
	600	Comet	03-03	**HF**
GV	650	Aguila	04-05	**HF**
SYM				
	125	Wolf Classic	05-05	**HF**
MF	180		03-03	**HF**

SBS 552 Recommended compound

HONDA				
VTR	250		88-89	**HF**
VT	500	ED	82-82	**HF**
CBX	550	F, F2	82-86	**HF**

Available compounds **HF • DCC** **SBS 550**

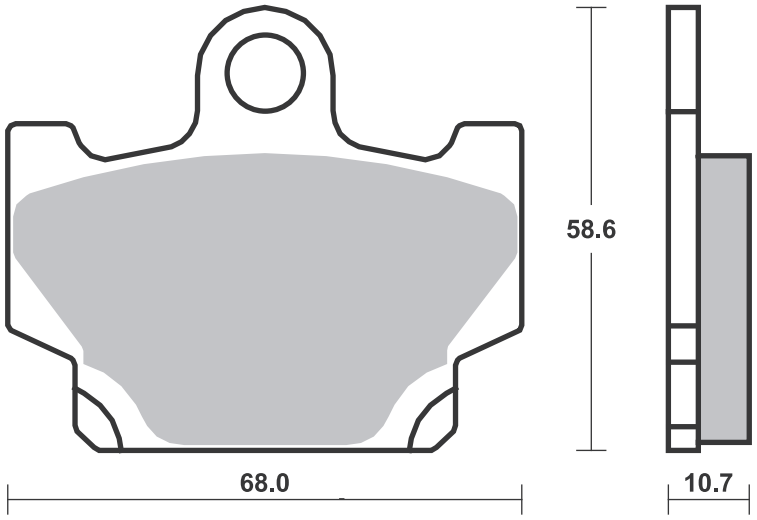

Available compounds **HF** **SBS 551**

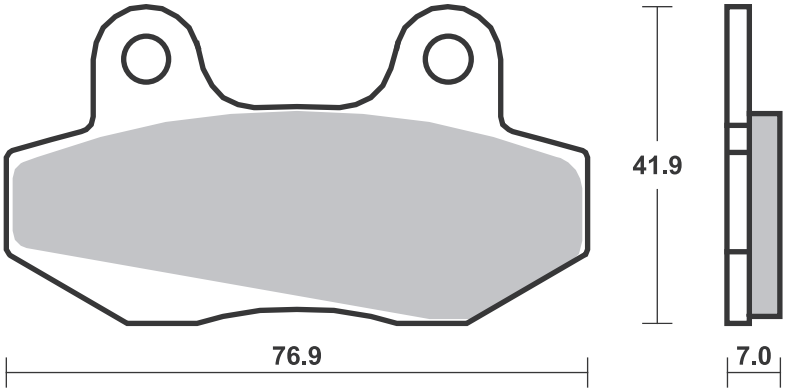

Available compounds **HF** **SBS 552**

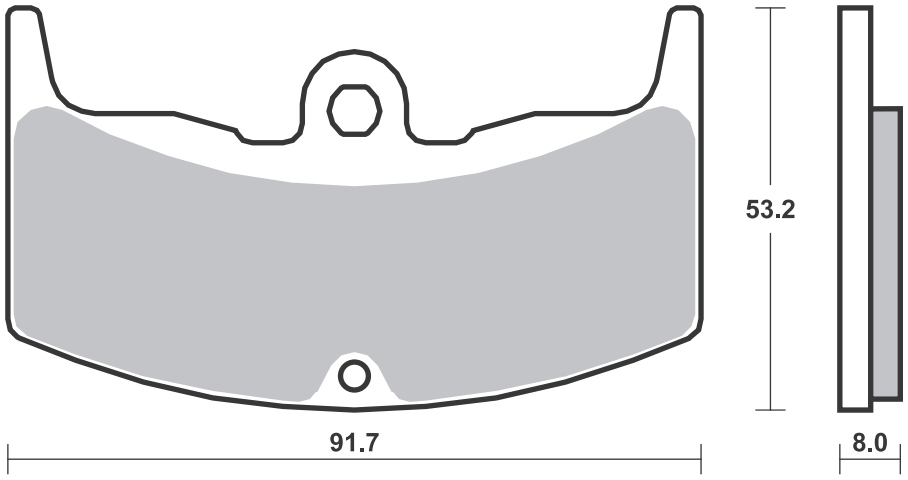

Dimensions in mm / Dimensions en mm • 1” = 25.4 mm , 1 mm = 0.04”

SBS 553 Recommended compound

HARLEY DAVIDSON				
FLH	1200		80 - 80	**H.HF**
FLH	1340	80	81 - 81	**H.HF**
FLH	1340	Classic	82 - 83	**H.HF**
FLH	1340	Electra Glide Spec.	84 - 84	**H.HF**
FLH	1340	Heritage	81 - 81	**H.HF**
FLHT	1340	Tour Glide	84 - 84	**H.HF**
FLT	1340		84 - 85	**H.HF**
FLT	1340	80	80 - 81	**H.HF**
FLT	1340	80 Classic	81 - 81	**H.HF**
FLT	1340	Classic	82 - 83	**H.HF**
FLT	1340	Tour Glide	82 - 82	**H.HF**

Available compounds **H.HF • H.CT** **SBS 553**

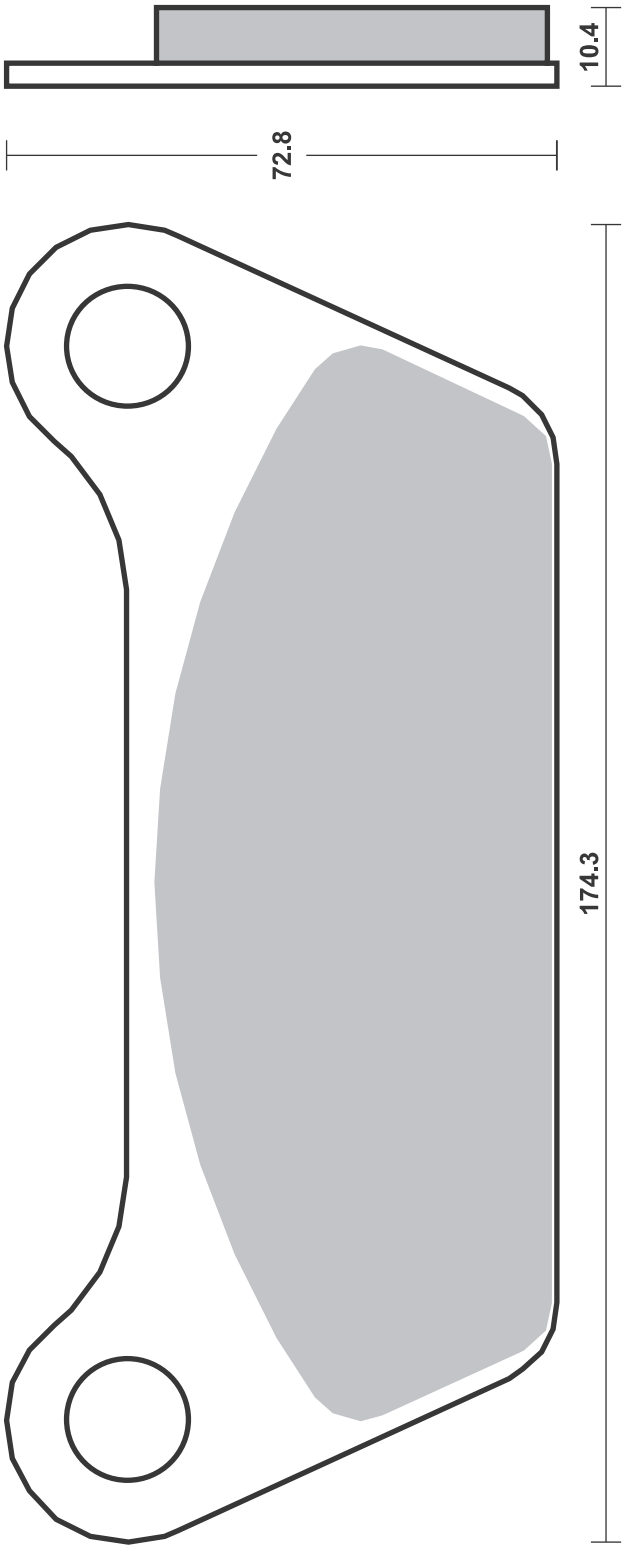

Dimensions in mm / Dimensions en mm • 1” = 25.4 mm , 1 mm = 0.04”

SBS 554 Recommended compound

BENELLI					
	900	Sei	81 - 83	**HF**	
BMW					
R65/1	650		86 - 86	**HF**	
R80	800		86 - 88	**HF**	
R80	800	GS Mystic	91 - 95	**HS**	
R80	800	GS Paris Dakar	88 - 94	**HS**	
R80	800	RT	84 - 85	**HF**	
R100	1000	GS	87 - 94	**HF**	
R100	1000	GS Mystic	91 - 94	**HS**	
R100	1000	RT	91 - 95	**HS**	
MOTO-GUZZI					
	1000		81 - 83	**HF**	**HF**
SP	1000	Le Mans	79 - 83		**HF**
TRIUMPH					
	750	Bonneville	84 - 84	**HF**	

SBS 555 Recommended compound

YAMAHA					
FZ	250	Phazer N, S	85 - 86	**HF**	
RZ	350		84 - 85		**HF**
XS	400	Z	83 - 83	**HF**	**HF**
FJ	600		84 - 85	**HF**	**HF**
FZ	600		86 - 87	**HF**	**HF**
FZ	600	S, SC	86 - 89	**HF**	
FZR	600		89 - 89	**HF**	**HF**
FZR	600	R	90 - 95		**LS**
YX	600	Radian	87 - 90	**HF**	
YZF	600	R	94 - 96		**LS**
YZF	600	R Thunder Cat	96 - 03		**LS**
FZ	700		87 - 88	**HF**	**HF**
FZX	700	Fazer	87 - 88	**HF**	**HF**
XJ	700		86 - 89	**HF**	
XJ	700	Maxim	85 - 89	**HF**	**HF**
XV	700	L, LC	84 - 87	**HF**	
XV	700	Virago	87 - 87	**HF**	
	750	Maxim	81 - 81		**HF**
FZ	750		85 - 86	**HF**	**HF**
FZ	750	Genesis	86 - 86	**HF**	
FZ	750	Genesis	87 - 88	**HF**	**HF**
FZ	750	Genesis	89 - 92		**LS**
FZR	750	R	89 - 92		**LS**
FZR	750	R Genesis	87 - 88		**HF**
FZX	750	Fazer	86 - 90	**HF**	**HF**
TX	750	A	73 - 76		**HF**
VF	750	Virago	88 - 88	**HF**	
XJ	750		83 - 87	**HF**	**HF**
XV	750		89 - 92	**HS**	

YAMAHA					
XV	750	Virago	93 - 97	**HS**	
YZF	750	R, SP	93 - 97		**LS**
TDM	850		91 - 01		**LS**
XJ	900		83 - 93	**HF**	**HF**
FZR	1000		94 - 95		**LS**
FZR	1000	EX UP	90 - 93		**LS**
FZR	1000	Genesis	87 - 89		**HF**
GTS	1000		93 - 99		**HF**
XV	1000	L, C	84 - 85	**HF**	**HF**
YZF	1000	R Thunder Ace	96 - 99		**LS**
BT	1100	Bulldog	02 - 06		**LS**
FJ	1100		83 - 85	**HF**	**HF**
XV	1100		94 - 97	**HS**	
XV	1100	Virago	86 - 93	**HF**	
XV	1100	Virago	99 - 99		**LS**
XVS	1100	V-Star	99 - 06		**LS**
XVS	1100	V-Star Classic	00 - 06		**LS**
FJ	1200		86 - 87	**HF**	**HF**
FJ	1200	ABS	91 - 93		**LS**
V-MAX	1200		85 - 89	**HF**	**HF**
V-MAX	1200		90 - 92	**HS**	**LS**
XV	1200		84 - 87	**HF**	**HF**
XV	1200	Venture Royale	85 - 85	**HF**	**HF**
XV	1200	Z12T	84 - 87	**HF**	**HF**
XVT	1200	T, Vent. Royale	84 - 85	**HF**	**HF**
XJR	1300	SP	01 - 01		**LS**

Available compounds **HF • HS** **SBS 554**

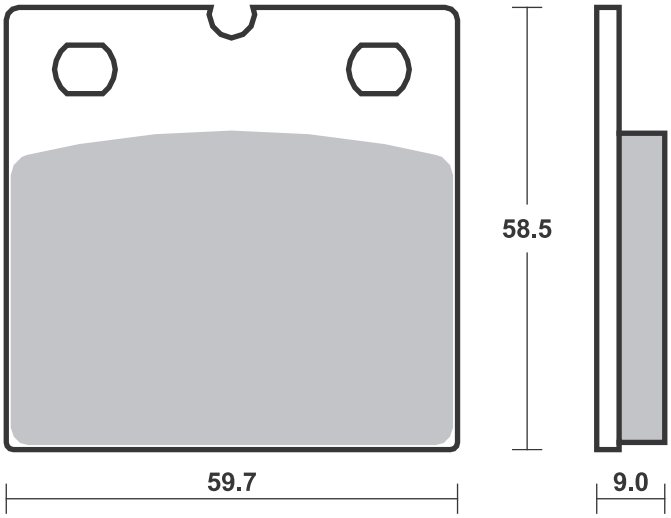

Available compounds **HF • HS • LS • DCC • RQ** **SBS 555**

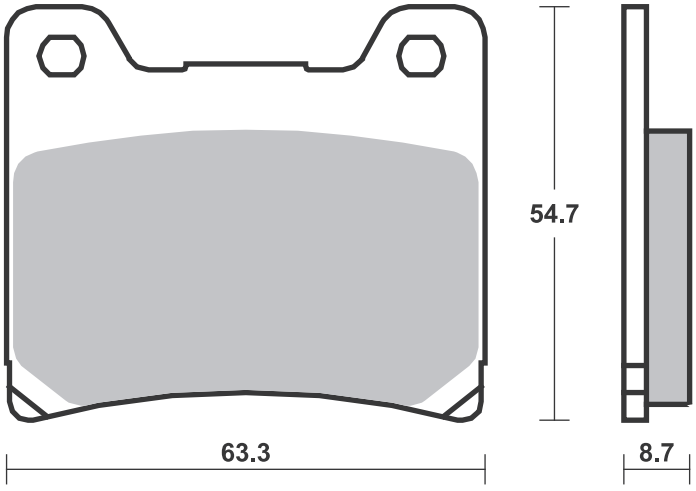

SBS 556 Recommended compound

HYOSUNG					
GT	250	Comet	02-02		**LS**
	600	Comet	02-02		**LS**
KAWASAKI					
	600	R, Ninja	89-96		**HF**
ZX-7R	750	Ninja	89-03		**LS**
ZRX	1100		96-00		**LS**
ZX	1100		93-97		**LS**
ZZR	1100		94-01		**LS**
ZRX	1200		01-04		**LS**
ZRX	1200	R	01-08		**LS**
ZRX	1200	S	01-07		**LS**
ZX-12R	1200	Ninja	00-06		**LS**
ZZR	1200		02-04		**LS**
SUZUKI					
GSF	400	Bandit	91-97		**LS**
GS	500	F	04-08		**HF**
GS	550		83-86	**HF**	**HF**
GSF	600	Bandit	95-99		**LS**
GSF	600	Bandit / S Bandit	00-04		**LS**
GSX	600	FW	98-04		**LS**
GSX	600	Katana	88-89		**HF**
GSX	600	Katana	90-97		**LS**
GSX-R	600		92-93		**LS**
GSX-R	600		97-03		**LS**

SUZUKI					
RF	600	R	93-96		**LS**
SV	650	,S	99-02		**LS**
GS	750	Katana	85-86	**HF**	**HF**
GS	750	RF	85-85		**HF**
GSX	750		98-08		**LS**
GSX	750	FW	98-02		**LS**
GSX	750	Katana	89-96		**LS**
GSX-R	750		85-87		**HF**
GSX-R	750		88-03		**LS**
TL	1000	RW	98-02		**LS**
TL	1000	S V-Twin	97-01		**LS**
GSX	1100	F	93-96		**LS**
GSX	1100	G	96-98		**LS**
GSX	1100	Katana	93-93		**LS**
GSX-R	1100		86-88		**HF**
GSX-R	1100		89-97		**LS**
GSF	1200	Bandit	95-05		**LS**
GSF	1200	S Bandit	01-05		**LS**
GSX-R	1300	Hayabusa	99-07		**LS**

SBS 557 Recommended compound

HYOSUNG					
	125	GA-4	99-99	**HF**	
GA	300		98-01	**HF**	
KAWASAKI					
EL	250		91-94	**HF**	
EL	250		93-94	**HS**	
EL	250	Eliminator	88-89	**HF**	
EX	250	R Ninja	86-87	**HF**	**HF**
EX	305		83-83	**HF**	
EN	450		85-90	**HF**	
EN	500		90-04	**HS**	
EN	500	Vulcan	96-97	**HS**	
GPZ	550		84-87	**HF**	**HF**
ZX	550		84-89	**HF**	**HF**
ZL	600		85-91	**HF**	
ZX	600	Ninja	85-87	**HF**	**HF**
VN	700	Vulcan	85-85	**HF**	
ZN	700		84-89	**HF**	**HF**
	750	Vulcan	93-94	**HF**	
GPZ	750		83-87	**HF**	**HF**
GPZ	750	R	85-86	**HF**	**HF**
GPZ	750	T	83-85	**HF**	**HF**
KZ	750		83-84	**HF**	
KZ	750	, Turbo	84-86	**HF**	**HF**
KZ	750	Eliminator	88-88	**HF**	**HF**
KZ	750	LTD Twin	83-85	**HF**	**HF**
VN	750	Twin	88-88	**HS**	
VN	750	Vulcan	86-94	**HF**	
Z	750		83-83	**HF**	
ZX	750	E, GP	83-85	**HF**	**HF**
VN	800	Vulcan,Classic	95-97	**HS**	
ZL	900	Eliminator	85-86	**HF**	**HF**

KAWASAKI					
ZX	900		83-84	**HF**	**HF**
KZ	1000	R Ninja	86-88	**HF**	**HF**
ZG	1000	Concours	86-93	**HF**	**HF**
ZG	1000	Concours	94-03		**LS**
ZL	1000		86-87	**HF**	**HF**
GPZ	1100		83-86	**HF**	**HF**
KZ	1100	GP	83-86	**HF**	**HF**
KZ	1100	R, LTD	84-84	**HF**	**HF**
ZN	1100	LTD	84-84	**HF**	**HF**
ZX	1100	GP	83-83	**HF**	**HF**
ZG	1200	Voyager XII	86-93	**HS**	**LS**
ZN	1300		83-84	**HF**	**HF**
ZN	1300	Voy.	85-86	**HF**	**HF**
VN	1500	Vulcan	87-92	**HS**	**LS**
VN	1500	Vulcan Classic	97-99		**LS**
VN	1500	Vulcan Nomad	98-01		**LS**
VN	1500	Vulcan, SE	87-92	**HS**	**LS**

Available compounds **HF • HS • LS • RQ** **SBS 556**

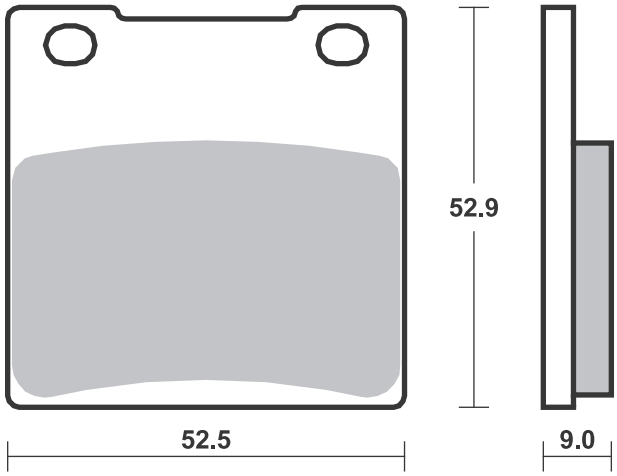

Available compounds **HF • HS • LS** **SBS 557**

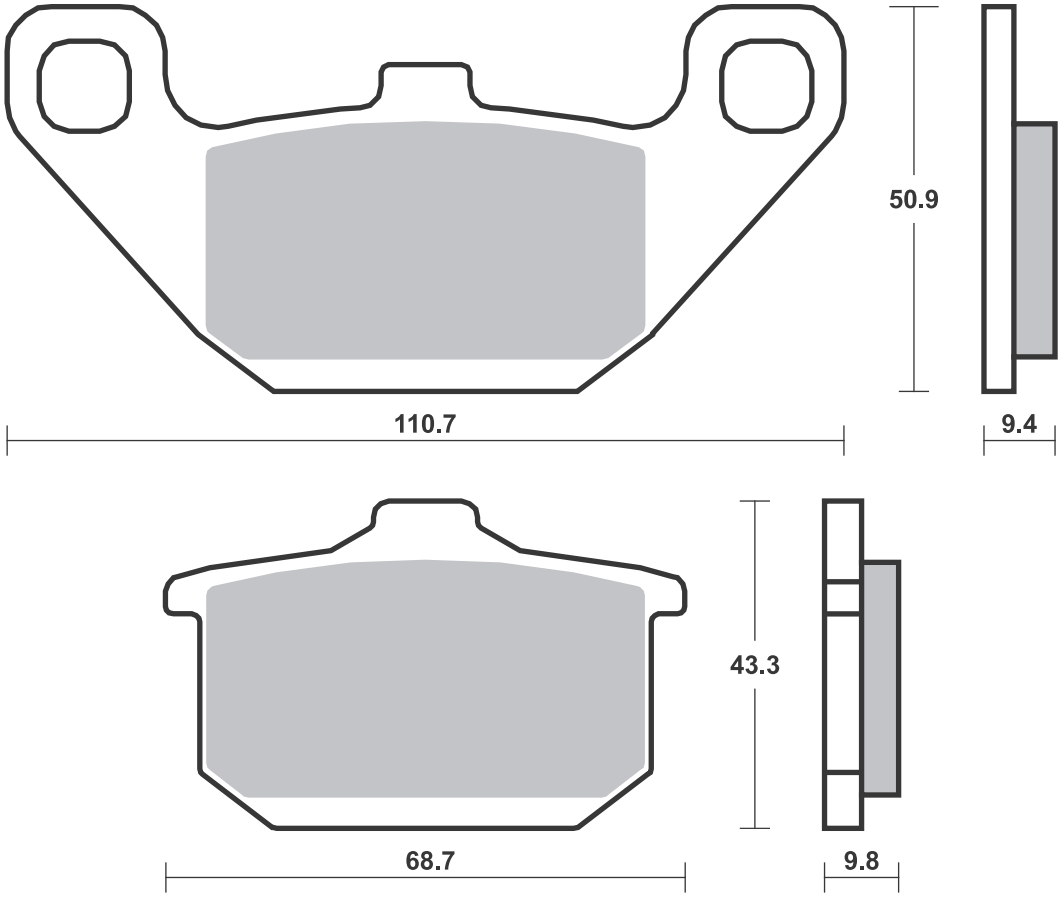

Dimensions in mm / Dimensions en mm • 1” = 25.4 mm , 1 mm = 0.04”

SBS 558 Recommended compound

BENELLI					
TNT	125		17-17	**HF**	
HONDA					
CR	125	RE, RF	84-85	**SI**	
CR	125	RG	86-86	**SI**	
ATC	250	R	85-86	**SI**	**SI**
ATC	250	X	85-85	**SI**	
CR	250	RE, RF	84-85	**SI**	
CR	250	RG	86-86	**SI**	
MTX	250	R	86-86	**SI**	
TRX	250	R	86-89		**SI**
TRX	250	R Fourtrax	88-88		**SI**
TRX	250	X Fourtrax	87-87		**SI**
XL	250	R	84-87	**HF**	
XR	250	R	84-87	**SI**	
ATC	350	Odyssey	85-85	**SI**	
ATC	350	X	85-85	**SI**	

HONDA					
XL	350	R	84-87	**HF**	
XR	350	R	84-85	**SI**	
CR	500	RE, RF	84-85	**SI**	
CR	500	RG	86-86	**SI**	
XL	500	R	83-87	**HF**	
XR	500	R, Pro Link	83-84	**HF**	
XL	600	R	83-86	**HF**	
XR	600	R	83-87	**SI**	

SBS 559 Recommended compound

BETA					
	50	Rev	00-09	**HF**	**HF**
ST	50		97-97	**HF**	**HF**
	80	EVO Junior	10-11	**HF**	**HF**
	80	Rev	00-07	**HF**	**HF**
ALP	125		99-09	**RSI**	**RSI**
ALP	125	4-stroke	00-05	**RSI**	**RSI**
SR	125	34	89-89	**HF**	
TR	125	34,35	89-90	**RSI**	**RSI**
TRIAL	125		97-97	**RSI**	
ALP	200	4-stroke	00-05	**RSI**	**RSI**
	240	Super Trial	92-92	**RSI**	
ALP	240		92-92	**RSI**	
ALP	240		96-96	**RSI**	
	250	Techno	96-96	**RSI**	**RSI**
	250	Zero	91-91	**RSI**	
ALP	250		92-92	**RSI**	
ALP	250		97-03	**RSI**	**RSI**
	260	Zero	91-91	**RSI**	
ALP	260		96-96	**RSI**	
TR	260	34,35,ZERO	89-92	**RSI**	
CPI					
	125	Supermoto	07-12	**HF**	
DERBI					
DS	50		88-88	**HF**	
FD	50	Yumbo	84-84	**HF**	
FD	50	Yumbo Extra	87-87	**HF**	
FDS	50		87-87	**HF**	
FDT	50		87-87	**HF**	
FDT	50	Coppa	85-85	**HF**	
FDX	50		89-89	**HF**	
GP1	50		05-05		**HF**
GPR	50	Nude	04-10		**HF**
GPR	50	Racing	04-13		**HF**
	75	GPR	89-89		**HF**
	75	Sport, Coppa	84-84	**HF**	
GPR	75	Sport	92-92		**HF**
GPR	80	Cup	04-05		**HF**
	125	Senda R 4T	04-12		**HF**
	125	Senda X-Treme SM 4T	04-05		**HF**

DERBI					
	125	Terra	07-07	**HF**	
GP1	125		05-06		**HF**
GPR	125		05-06		**HF**
GPR	125	Nude	05-08		**HF**
GPR	125	Racing	09-09		**HF**
FANTIC					
	250	K-Roo	93-95	**RSI**	**RSI**
	305		89-90	**RSI**	**RSI**
	307	Trial	91-94	**RSI**	**RSI**
GAS GAS					
TXT	50	Boy	04-04	**RSI**	**RSI**
	125	Delta	91-91	**HF**	
	125	Pampera	96-03	**RSI**	**RSI**
	125	Trial	91-91	**RSI**	
	200	Pampera	99-08	**RSI**	**RSI**
TX	200		97-98	**RSI**	**RSI**
	250	Pampera	96-99	**RSI**	**RSI**
	250	Trial	89-96	**RSI**	**RSI**
GT	250	Contact	92-93	**RSI**	**RSI**
TX	270		97-98	**RSI**	**RSI**
TX	320		97-99	**RSI**	**RSI**
	325	Halley PXC	86-86	**RSI**	**RSI**
	327	Trial	89-90	**RSI**	**RSI**
GT	327	Contact	89-90	**RSI**	**RSI**
	370	Pampera	96-00	**RSI**	**RSI**
GMA					
4 Piston front Model F					
HUSQVARNA					
	50	Husky Boy J, R, S	01-10	**RSI**	
JAYBRAKE					
2 Piston Dual Series Caliper					
4 Piston Quad Series Caliper					
KTM					
SX	60		99-99	**RSI**	
SX	65		00-01	**RSI**	

MALAGUTI					
	50	Fifty Evolution	91-91	**HF**	
PERFORMANCE MACHINE					
125 X 2					
125 X 4S					
125 X 4SL					
SCORPA					
TY-S	115	F Trial	06-06	**HF**	
TY-S	125	F Trial	06-08	**HF**	
SHERCO					
	80	0,8	01-03	**HF**	**HF**
ST	125	1,25	01-05	**HF**	**HF**
ST	200	2	01-01	**HF**	**HF**
ST	250		99-00	**RSI**	**RSI**
SJP					
2 Piston Caliper (30-375)					
4 Piston Caliper (30-370)					
TOMOS					
MC	125	T	06-08		**HF**
SE	125		05-08		**HF**
SM	125	F	06-08		**HF**
YAMAHA					
TY	250	R	91-92	**HF**	
TY	250	Z	93-96	**HF**	**HF**

Available compounds **HF • SI • RSI** **SBS 558**

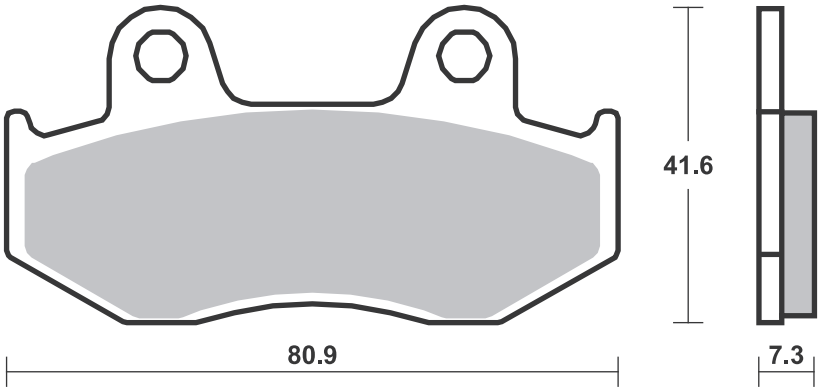

Available compounds **HF • HS • CS • SI • RSI • H.HF • H.CT • H.HS** **SBS 559**

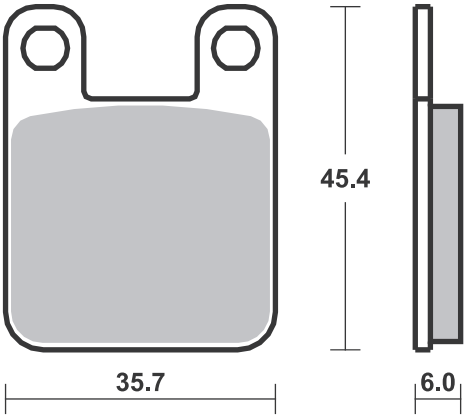

SBS 560 Recommended compound

CAGIVA					
	650 Alazurra	85-88	**HF**		**HF**
FANTIC					
HP1	125 Sport	86-86	**HF**		
GILERA					
	80 TG 1, 2, 3	77-82	**HF**		
	125 TG 1, 2, 3 (alu wheels)	77-85	**HF**		
	125 TG1, GR1, RTX	77-85	**HF**		
GMA					
2 Piston Caliper, small Model B					
JAYBRAKE					
2 Piston Caliper ADC/ADCS					

MOTO-MORINI					
	125 Strada	80-80	**HF**		
	250 Strada	80-80	**HF**		
	350 K2	84-87	**HF**		
	350 Strada	76-81	**HF**		
	500 Strada	80-82	**HF**		

SBS 561 Recommended compound

HONDA					
CB	450 SC Nighthawk	82-82	**HF**		
CB	650 SCC Nighthawk	82-82	**HF**		
VT	700 C Shadow	84-86	**HF**		
VT	750 C	83-85	**HF**		

SBS 562 Recommended compound

HONDA					
ATC	200 X	83-85			**SI**
ATC	250 R	82-84			**SI**
ATC	250 X	85-85			**SI**
TRX	300 EX	93-00			**SI**
ATC	350 Odyssey	85-85			**SI**
ATC	350 X	85-89			**SI**

Available compounds **HF • H.HF • H.CT** **SBS 560**

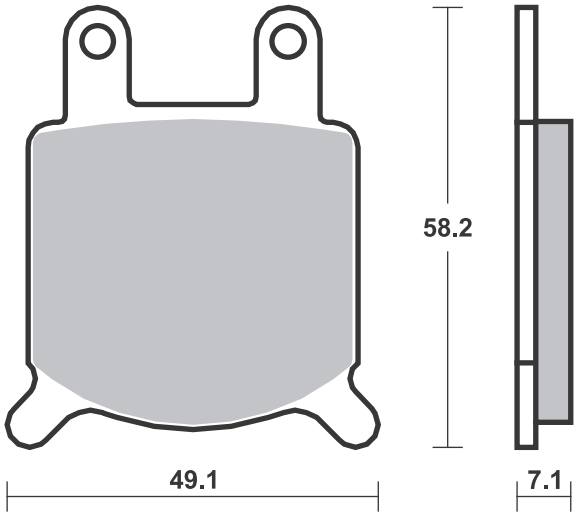

Available compounds **HF** **SBS 561**

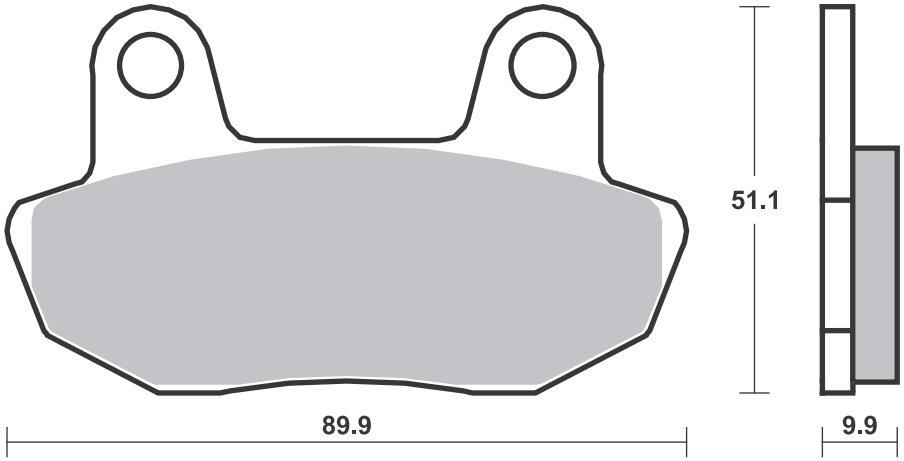

Available compounds **HF • SI • RSI** **SBS 562**

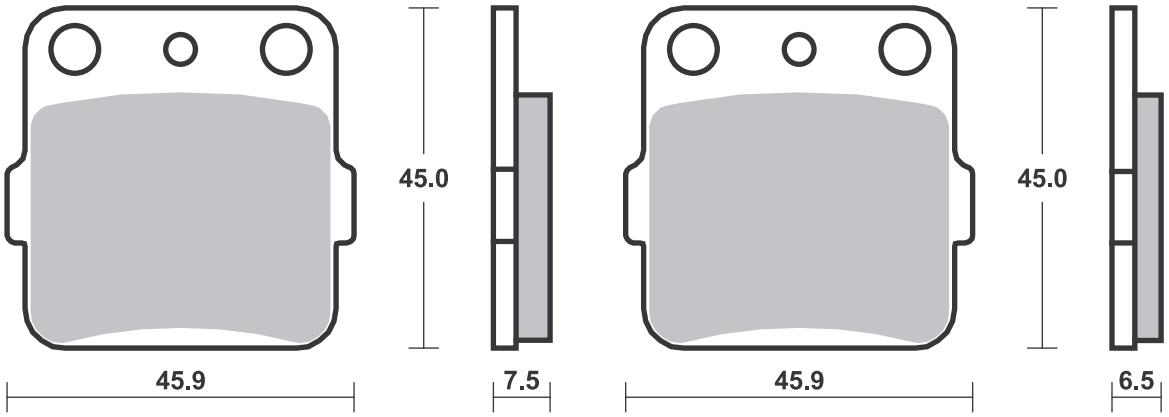

Dimensions in mm / Dimensions en mm • 1” = 25.4 mm , 1 mm = 0.04”

SBS 566 Recommended compound

APRILIA				
RS-4	125	(J.Juan cal.)	11-19	**HS**
BETA				
	350	4.0 Motard	04-06	**RSI**
BIMOTA				
YB7	400		89-89	**HF**
	500	Vdue	97-00	**HF**
	600	Bellaria	91-91	**HF**
YB9	600	SRI	97-97	**HF**
BB1	650	Supermono	97-00	**HF**
SB7	750		96-88	**HF**
YB4	750		89-89	**HF**
1D	851	Tesi	91-91	**HF**
1D	900	Tesi	93-93	**HF**
DB2	900		92-00	**HF**
DB3	900	Mantra	97-00	**HF**
1D	906	Tesi	91-91	**HF**
	1000	Furano	92-93	**HF**
2D	1000	Tesi	04-06	**HS**
YB11	1000		97-00	**HF**
YB6	1000		89-89	**HF**
YB8	1000		90-90	**HF**
	1002	Dieci	91-91	**HF**
SB6	1100		97-00	**HF**
BREMBO RACING CALIPERS				
Billet 20.4756.52/62, racing				
Goldline single pin				
20.5165.55/65, road				
CAGIVA				
	125	Raptor	03-10	**HF**
	500	Mito	07-07	**HS**
SP	525	Mito	08-10	**HS**
CANNONDALE				
S	440		03-03	**HF**
DUCATI				
	400	SS, Junior	92-97	**HF**
	400	SS, Nuda	92-96	**HF**
	502	Single	93-93	**HF**
	502	Supermono	93-93	**HF**
	600	SS Supersport	95-00	**HF**
M	600	Monster	94-99	**HF**
	748	Biposto	95-98	**HF**
	748	SP	95-97	**HF**
	750	Monster	96-99	**HF**
	750	SS	91-98	**HF**
	750	SS Supersport	95-99	**HF**
	750	SS, Carenara	92-98	**HF**
	750	SS, Nuda	92-92	**HF**
	750	Super Sport	92-94	**HF**
	851	Strada	89-89	**HF**
	851	Strada	91-92	**HF**
	851	Superbike	90-90	**HF**
	888	Roche Replica	91-91	**HF**
	888	SP V	93-93	**HF**
	888	SP4	92-95	**HF**
	888	SPO	93-93	**HF**
	888	SPS	92-95	**HF**
	888	Strada	93-93	**HF**
	888	Superbike	93-93	**HF**
	900	FE	97-98	**HF**
	900	M, IL Monster	93-99	**HF**
	900	SL	92-97	**HF**
DUCATI				
	900	SS	90-94	**HF**
	900	SS Supersport	95-97	**HF**
	900	SSR	92-92	**HF**
907	900	I. E.	90-93	**HF**
M	900	Street Monster	94-99	**HF**
	916	Biposto	94-98	**HF**
GAS GAS				
SM	125		02-13	**HF**
SM	250		02-13	**HF**
SM	400	fse	02-02	**HF**
SM	450	fse	03-06	**HF**
SM	450	FSR	07-13	**HF**
GILERA				
	350	Saturno Bialbero	90-90	**HF**
	500	Saturno Bialbero	90-90	**HF**
	500	Saturno Piuma	90-94	**HF**
HONDA				
RS	125		95-03	**DC**
RS	250	R	93-93	**DC**
HUSQVARNA				
SM	400	R	02-02	**HF**
SM	450	R	03-04	**HF**
SM	570	R	01-08	**HF**
INDIAN				
	1700	Chief Blackhawk	11-13	**H.HS**
	1700	Chief Bomber	10-13	**H.HS**
	1700	Chief Classic	10-13	**H.HS**
	1700	Chief Dark Horse	10-13	**H.HS**
	1700	Chief Deluxe	09-13	**H.HS**
	1700	Chief Roadmaster	09-13	**H.HS**
	1700	Chief Standard	09-13	**H.HS**
	1700	Chief Vintage	09-13	**H.HS**
ITALJET				
	900	Grifon	00-00	**HF**
KTM				
	125	Sting	99-99	**HF**
SX	450	SM Factory Replica	04-07	**RSI**
	600	Duke	93-94	**HF**
	620	Duke	96-98	**HF**
	640	Duke	99-02	**HF**
LC4	640	Supermoto	03-03	**HF**
LC4	660	SM Factory Replica	02-02	**RSI**
SMC	660	Supermoto	03-03	**HF**
LAVERDA				
	650		92-92	**HF**
	668	668	96-97	**HF**
	668	Ghost, Diamante	97-97	**HF**
	750	Cup	98-01	**HF**
	750	Diamante	97-01	**HF**
	750	Ghost Strike	97-01	**HF**
	750	S Formula	97-01	**HF**
LAVERDA				
	750	S, S Carenata	97-01	**HF**
	750	Sport	99-01	**HF**
	750	Strike/Black Strike	99-01	**HF**
	750	T8	98-01	**HF**
TTS	800		99-99	**HF**
JOTA	1000		95-95	**HF**
MOTO-GUZZI				
	750	Ippogrifo	97-97	**HF**
	1000	Daytona	91-02	**HF**
	1000	Quota	92-92	**HF**
RS	1000	Daytona	97-00	**HF**
V10	1000	Centauro	96-00	**HF**
	1100	California Jackal	00-00	**HF**
	1100	California Jackal Basic	00-00	**HF**
	1100	California Special	99-00	**HF**
	1100	Sport	96-04	**HF**
EV	1100	California	97-00	**HF**
V11	1100	Sport	97-00	**HF**
MZ				
	660	(MUZ) Skorpion Cup	99-99	**HF**
	660	(MUZ) Skorpion Replica	97-99	**HF**
	660	(MUZ) Skorpion Sport	95-99	**HF**
	660	(MUZ) Skorpion Tour	95-00	**HF**
	660	(MUZ) Skorpion Traveller	99-00	**HF**
NORTON				
F-1	600		90-90	**HF**
TT	600		92-92	**HF**
REVTECH				
Wilwood Caliper front/rear				
SACHS				
	500	MadAss	05-08	**HF**
TM				
SMR	125		05-05	**RSI**
SMF	400	F	02-02	**RSI**
SMR	400	F	03-03	**RSI**
SMR	450	F	04-04	**RSI**
SMX	450	F	03-03	**RSI**
SMR	530	F	03-03	**RSI**
SMX	600	F	03-03	**RSI**
VOR				
SM	400		02-02	**RSI**
SM	450		02-04	**RSI**
	500	492 Super Motard	00-01	**HF**
SM	530		02-04	**RSI**

Available compounds **HF • HS • DC • RST • DCC • RSI • H.HF • H.CT • H.HS SBS 566**

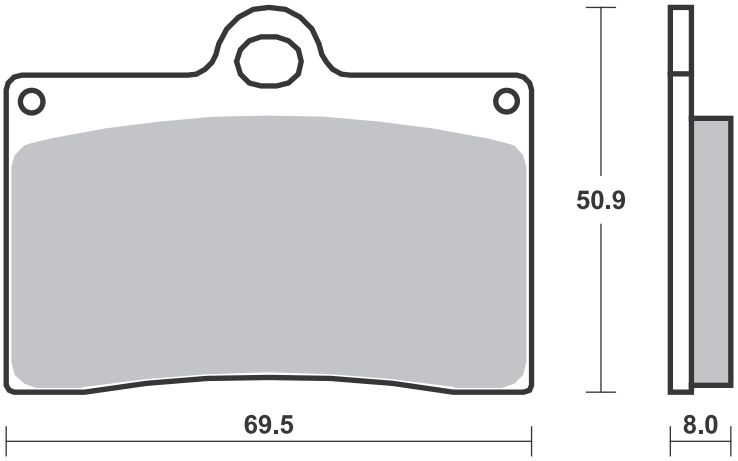

Dimensions in mm / Dimensions en mm • 1” = 25.4 mm , 1 mm = 0.04”

SBS 570 Recommended compound

YAMAHA				
FZ	250	R	85-85 **HF**	
SRX	250	T, TC	87-87 **HF**	
RZ	350		86-88 **HS**	**LS**
FZR	400	A	90-90	**LS**
XJ	400	S Seca II	93-93	**LS**
FZ	600	S, SC	86-89	**HF**
FZS	600	Fazer	98-03	**LS**
FZS	600	S Fazer	01-03	**LS**
SRX	600		86-87 **HF**	**HF**
SRX	600		90-99	**LS**
XJ	600	SECA II	92-96	**LS**
FZ	750	Genesis	86-86	**HF**

SBS 571 Recommended compound

HONDA				
CBX	550	F, F2	82-86	**HF**

Available compounds **HF • HS • LS • DCC • RQ** **SBS 570**

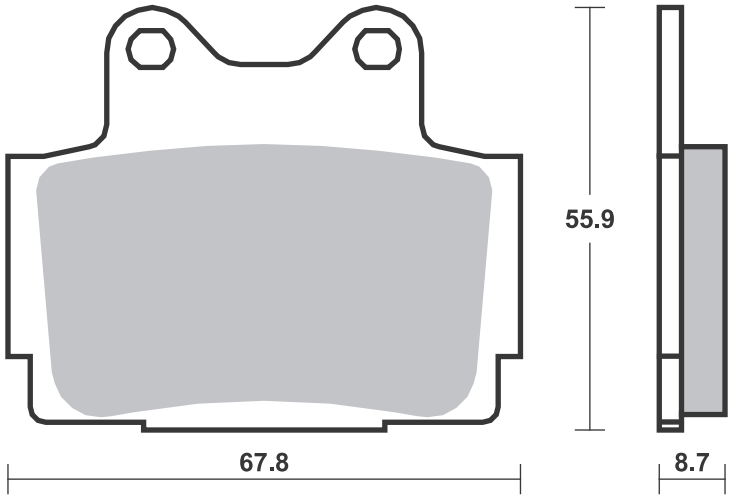

Available compounds **HF** **SBS 571**

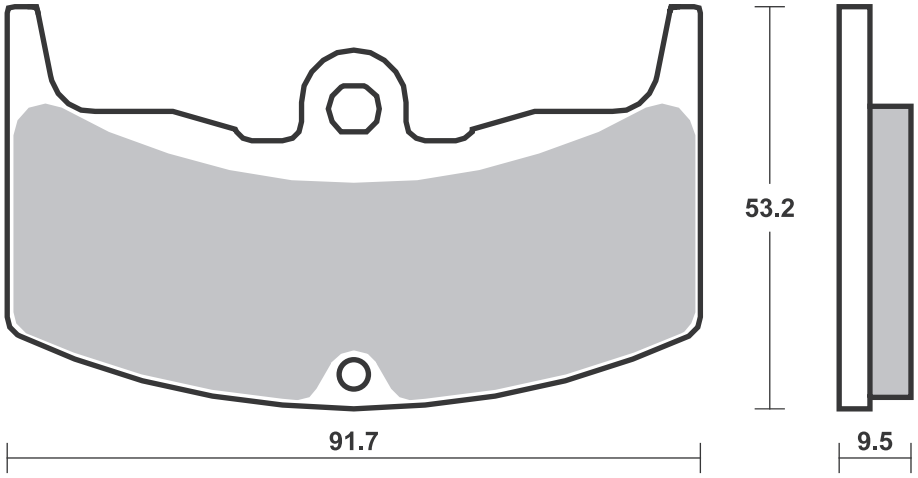

SBS 572 Recommended compound

HONDA					
CM	400	C	81-81	**HF**	
CB	450	SC Nighthawk	83-86	**HF**	
CX	500		81-81	**HF**	
CX	500	Turbo	82-83		**HF**
GL	500		82-82	**HF**	
GL	500	I	81-82	**HF**	
CX	650	E	83-86	**HF**	
VF	700	C Magna	85-86	**HF**	
VF	700	F Interceptor	84-85	**HF**	
CB	750	SC	82-83	**HF**	
CB	900	F, F2	81-84	**HF**	
CBX	1000		81-82	**HF**	
GL	1100	Gold Wing	82-83	**HF**	
VF	1100	C	83-86	**HF**	
VF	1100	S	84-85	**HF**	
GL	1200	A, I Gold Wing	84-86	**HF**	
GL	1200	DX Gold Wing	86-87	**HF**	

HONDA					
GL	1200	Gold Wing	84-86	**HF**	

SBS 574 Recommended compound

BETA					
	350	4.0 Motard	04-06		**RSI**
ALP	350	4.0	04-05		**RSI**
CAGIVA					
	125	Cruiser	89-89		**HF**
	125	E2	86-86	**HF**	
	125	Elefant	81-88	**HF**	
	125	SST	81-81	**HF**	
	125	Tamanaco	87-92		**HF**
	200	Aletta Electra	83-83	**HF**	
	200	Cross	83-86	**HF**	
FANTIC					
HP1	125	Sport	87-87	**HF**	
GILERA					
NGR	250		85-85	**HF**	

KTM					
SX	65		00-03		**RSI**
MALAGUTI					
	50	Evolution	91-91	**HF**	
ES	50	Dune	89-89	**HF**	**HF**
MDX	50		86-87	**HF**	
RST	50	Sport	87-87	**HF**	**HF**

SBS 575 Recommended compound

GILERA					
	125	Apache	91-94		**HF**
RC	125	Top Rally	90-93		**HF**
RC	600	Top Rally	90-94		**HF**
YAMAHA					
YSR	50		87-92	**HF**	
YBR	125		06-07	**HF**	
YZ	125		88-88		**RSI**
RT	180		95-96	**SI**	
IT	200		85-86	**SI**	
TT	200		86-89	**HF**	
TT	225	S,T	86-00	**HF**	
TT-R	225		01-04	**SI**	
XT	225		92-00	**HF**	
XT	225	Serow	86-86	**HF**	
IT	250		85-86	**SI**	
YTZ	250	Tri Moto	85-86	**SI**	**SI**

YAMAHA					
YZ	250		88-88		**RSI**
XT	350		85-96	**HF**	
YFM	350	XT, XU Warrior	87-88	**SI**	
YFZ	350	Banshee	87-89	**SI**	
WR	500	B	91-91		**SI**
XT	500		86-89	**HF**	
TT	600		85-88	**HF**	

Available compounds **HF • HS • LS • DCC** **SBS 572**

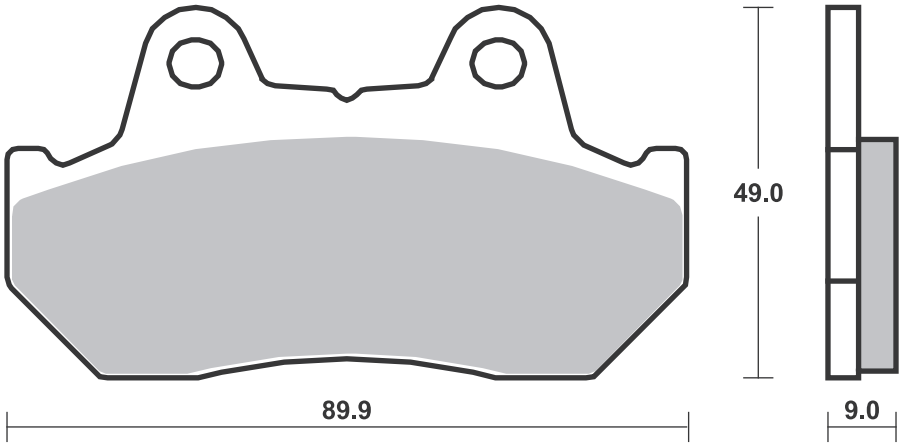

Available compounds **HF • CS • SI • RSI** **SBS 574**

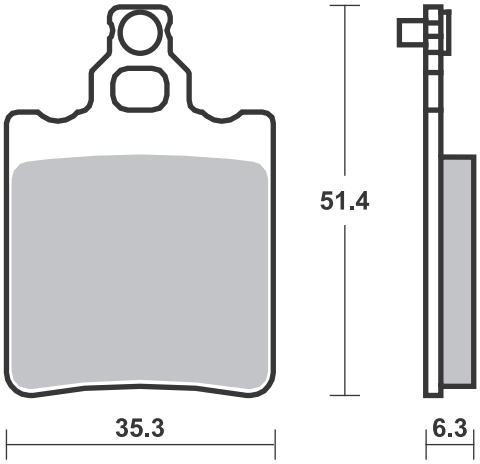

Available compounds **HF • LS • SI • RSI** **SBS 575**

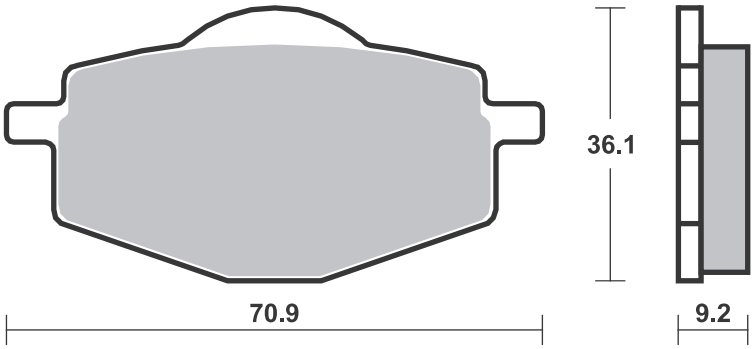

SBS 576 Recommended compound

YAMAHA				
YT	125	Tri Moto	82-85	**HF**
YT	175	Tri Moto	82-83	**HF**
YFM	200	DXS-DXW		
		Moto 4	86-87	**HF**
YFM	200	N Moto 4	85-89	**HF**
YTM	200	EK, EL Tri		
		Moto	83-84	**HF**
YTM	200	ERN Tri Moto	85-85	**HF**
YTM	200	K-N Tri Moto	83-85	**HF**
YFM	225	Moto 4	86-88	**HF**
YTM	225	DRN, DRS Tri		
		Moto	85-86	**HF**
YTM	225	DXK, DXN Tri		
		Moto	83-85	**HF**
YFM	250		89-91	**SI**
YFM	350	ERT, ERU	87-88	**HF**
YFM	350	ERW, ERA-G	89-95	**HF**
YFM	350	FWT, FWU		
		Big Bear	87-88	**HF**
YFM	350	FWW, FWA-G		
		Big Bear	89-95	**HF**

SBS 577 Recommended compound

SUZUKI					
VS	700	GLFG	86-87	**HF**	
GS	750	RF	85-85	**HF**	
GSX-R	750		85-87	**HF**	
VS	750	Intruder	86-91	**HF**	
S50	800	Boulevard	05-18	**HS**	
VS	800	Intruder	91-99	**HS**	
GSX-R	1100		86-88	**HF**	
GS	1150	EG	86-87	**HF**	**HF**
GS	1150	ES	84-85	**HF**	**HF**
GL	1400	Cavalcade	87-88		**HF**
GV	1400	Cavalcade LXE	87-90	**HS**	**LS**
S83	1400	Boulevard	05-10	**HS**	**LS**
VL	1500	Intruder LC	98-01	**HS**	**LS**

Available compounds **HF • SI • RSI** **SBS 576**

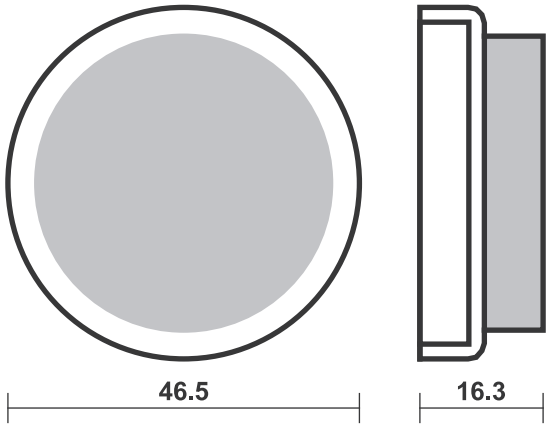

Available compounds **HF • HS • LS • DCC** **SBS 577**

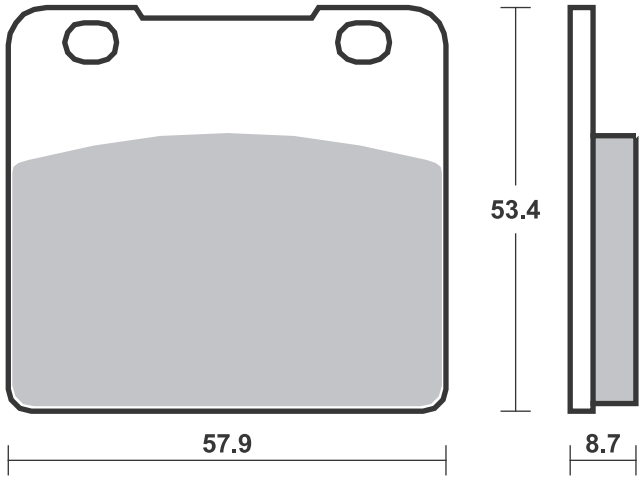

SBS 579 Recommended compound

HARLEY DAVIDSON				
FLT		Series	88-99	**H.HS**
XLH		Series	88-99	**H.HS**
XLH	883	Sportster	85-99	**H.HF**
XLH	1100		87-88	**H.HS**
XLH	1100	Sportster	85-86	**H.HF**
XLX	1100		86-86	**H.HF**
XLH	1200	Sportster	90-99	**H.HS**
FLHS	1340	Electra Glide		
		Sport	90-90	**H.HS**
FLHT	1340	Electra Glide	85-86	**H.HF**
FLHT	1340	Electra Glide		
		Classic	87-99	**H.HS**
FLHTC	1340	Electra Glide		
		Classic	85-86	**H.HF**
FLHTC	1340	Electra Glide		
		Classic	90-99	**H.HS**
FLHTC	1340	Electra Glide		
		Classic	93-93	**H.HS**
FLHTC	1340	Ultra Classic	90-99	**H.HS**
FLST	1340	Heritage		
		Softail	86-87	**H.HF**
FLST	1340	Heritage		
		Softail	88-99	**H.HS**
FLSTC	1340	Heritage		
		Softail Cl.	90-99	**H.HS**
FLSTF	1340	Fat Boy	90-99	**H.HS**
FLSTN	1340	Heritage		
		Softail		
		Nost.	93-99	**H.HS**
FLT	1340		84-85	**H.HF**
FLT/H	1340	Series	86-87	**H.HS**
FLTC	1340	Tour Glide		
		Classic	85-86	**H.HF**
FLTC	1340	Tour Glide		
		Classic	90-90	**H.HS**
FXDB	1340	Dyna Glide		
		Daytona	91-99	**H.HS**
FXDB	1340	Dyna Glide		
		Sturgis	91-99	**H.HF**
FXDB	1340	Sturgis	91-99	**H.HS**
FXDL	1340	Dyna Low		
		Rider	93-99	**H.HS**

HARLEY DAVIDSON				
FXDWG	1340	Dyna Wide		
		Glide	93-99	**H.HS**
FXE	1340		85-86	**H.HF**
FXLR	1340	Low Rider		
		Custom	87-99	**H.HS**
FXR	1340		87-88	**H.HS**
FXR	1340	Super Glide	85-86	**H.HF**
FXR	1340	Super Glide	90-99	**H.HS**
FXRD	1340	Sport Glide		
		GTE	85-86	**H.HF**
FXRS	1340	Low Rider	85-86	**H.HF**
FXRS	1340	Low Rider		
		Sport	87-99	**H.HS**
FXRS	1340	Low Rider		
		Sport Ed.	90-99	**H.HS**
FXRS	1340	Low Rider,		
		Convert.	90-99	**H.HS**
FXRT	1340	Sport Glide	85-86	**H.HF**
FXRT	1340	Sport Glide	90-99	**H.HS**
FXST	1340	Softail	84-86	**H.HF**
FXSTC	1340	Softail		
		Custom	85-86	**H.HF**
FXSTC	1340	Softail		
		Custom	88-99	**H.HS**
FXSTS	1340	Springer		
		Softail	90-99	**H.HS**
FXWG	1340		87-88	**H.HS**
FXWG	1340	Wide Glide	85-86	**H.HF**
FLSTS/I	1450	Heritage		
		Springer	00-03	**H.HS**
FLSTSC/I	1450	Springer		
		Softail		
		Classic	06-06	**H.HS**
FXSTS/I	1450	Softail	05-06	**H.HS**
FXSTS/I	1450	Springer		
		Softail	00-04	**H.HS**
FLSTSC/I	1584	Softail	07-07	**H.HS**

SBS 580 Recommended compound

YAMAHA			
YZ	125	85-87	**SI**
YZ	125	88-88	**RSI**
IT	200	86-86	**HF**
TT	250	87-92	**HF**
YZ	250	85-87	**SI**
YZ	250	88-88	**RSI**
TT	350	86-87	**SI**
YZ	490	85-90	**SI**
TT	600	90-92	**HF**

Available compounds **H.HF • H.CT • H.HS** **SBS 579**

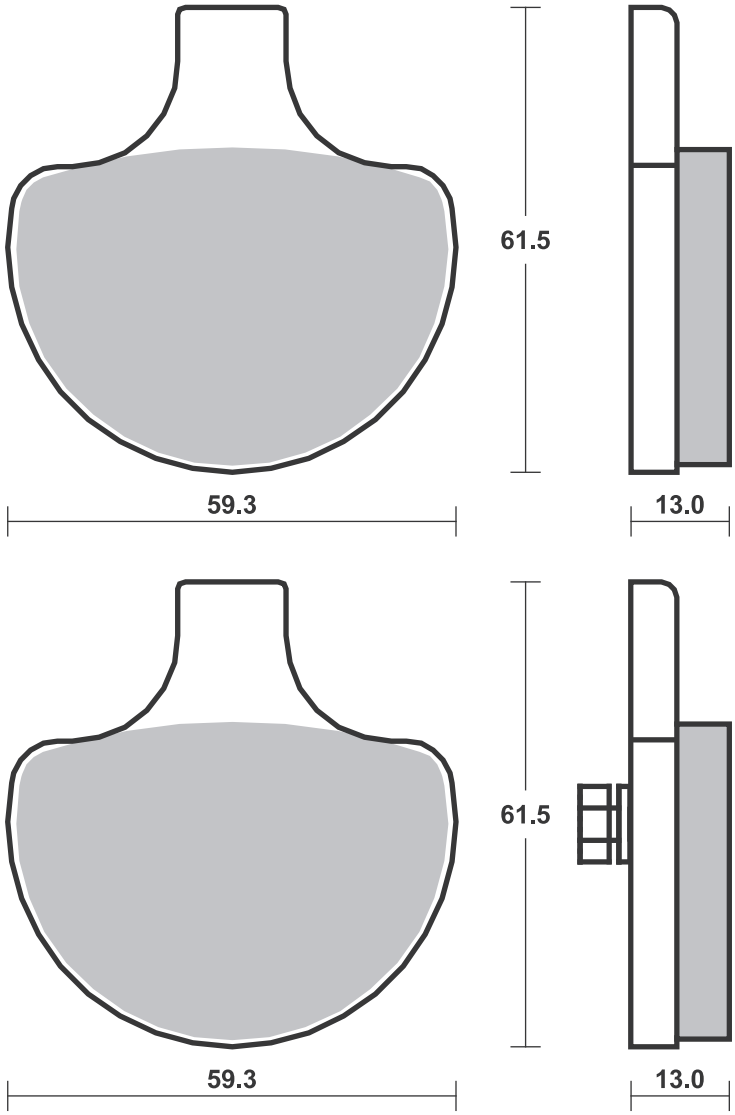

Available compounds **HF • SI • RSI** **SBS 580**

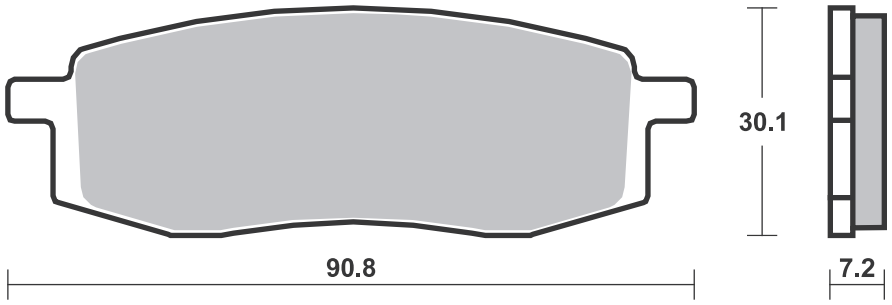

SBS 581 Recommended compound

MAICO					
GM	250	Star	86-86	**HF**	**HF**
GP	250	E	87-87	**HF**	**HF**
GP	250	Motocross	87-87	**HF**	**HF**
GP	400	E	87-88	**HF**	**HF**
GP	400	Motocross	87-88	**HF**	**HF**
GM	500	Star	86-86	**HF**	**HF**
GP	500	E	87-87	**HF**	**HF**
GP	500	Motocross	87-87	**HF**	**HF**
GP	550		87-87	**HF**	**HF**
SUZUKI					
RM	125		85-86	**HF**	
RM	250		85-85	**HF**	
RM	500		85-87	**HF**	
LS	650	P	86-88	**HF**	
LS	650	P Savage	95-04	**HF**	
S40	650	Boulevard	05-18	**HF**	

SBS 582 Recommended compound

SUZUKI					
RM	250		86-86	**HF**	
SP	600	F	85-87	**HF**	

SBS 584 Recommended compound

HONDA					
CR	80	R	86-91	**SI**	
CR	80	R, RB	92-02	**RSI**	
ATC	250	R	82-84	**SI**	
TRX	250	X Fourtrax	88-92	**SI**	**SI**
SUZUKI					
RM	125		88-88		**RSI**
LT	230		85-88		**SI**
LT	250		85-87		**SI**
RM	250		87-88		**RSI**
YAMAHA					
YZ	125		89-89		**RSI**
YZ	250		89-89		**RSI**
YFM	300	Warrior	89-89		**SI**

Available compounds **HF** **SBS 581**

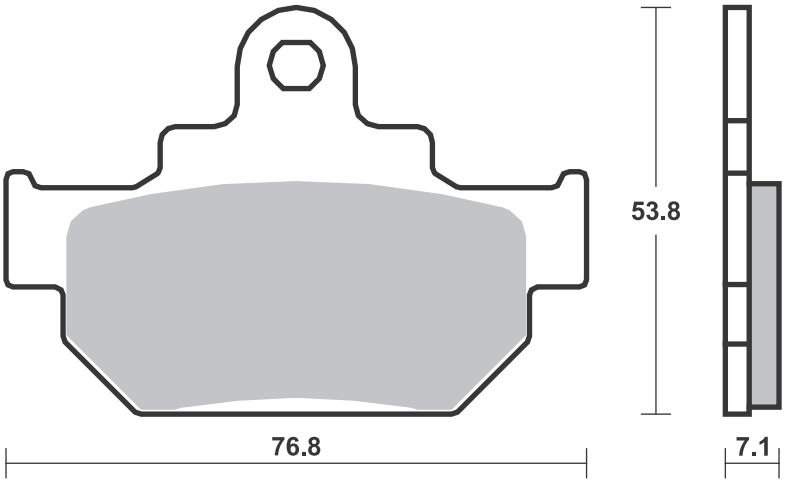

Available compounds **HF** **SBS 582**

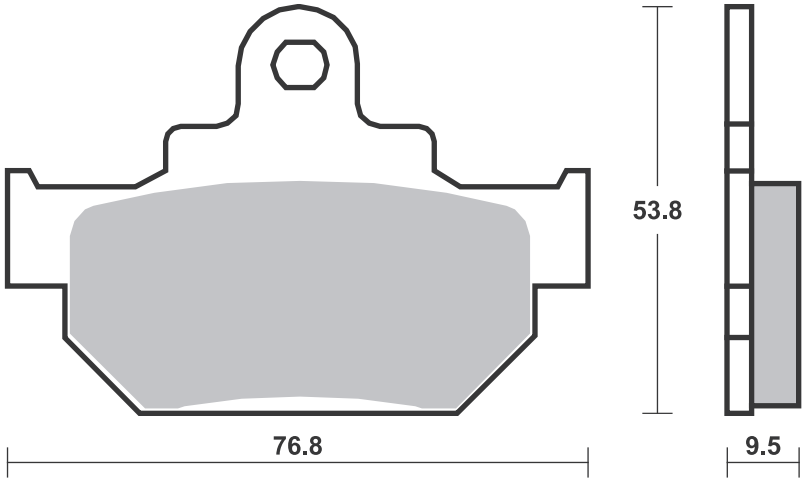

Available compounds **HF • SI • RSI** **SBS 584**

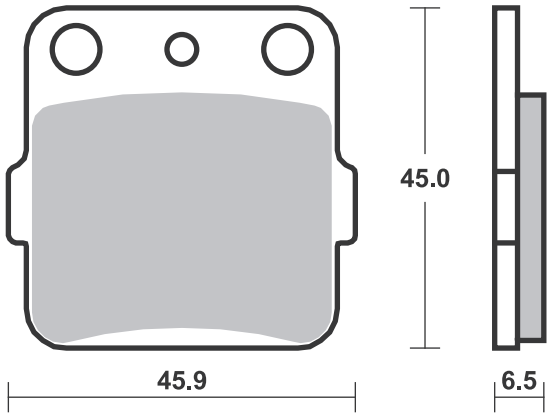

SBS 585 Recommended compound

APRILIA				
RS-4	125 (AJP cal.)	11 - 19		**HF**
DERBI				
	125 Mulhacen	08 - 11		**HF**
	125 Terra	08 - 13		**HF**
	125 Terra Adventure	08 - 14		**HF**
SUZUKI				
GS	125 ESD	83 - 94	**HF**	

SBS 586 Recommended compound

DERBI			
DXR	200 Quad		
	(Front disc)	04 - 07	**SI**
DXR	200 Quad		
	(Front drum)	04 - 05	**SI**
DXR	250 Quad		
	(Front disc)	04 - 07	**SI**
DXR	250 Quad		
	(Front drum)	04 - 05	**SI**
GAS GAS			
	125 Enducross	93 - 93	**SI**
HUSABERG			
	all models	89 - 98	**SI**
	350	91 - 92	**SI**
	500	91 - 98	**SI**
	501 Enduro	91 - 94	**SI**
	600 Enduro	91 - 94	**SI**
HUSQVARNA			
WRK	125	90 - 90	**SI**
WRK	240	90 - 90	**SI**
TE	350 Enduro	90 - 90	**SI**
	510	90 - 90	**SI**
KAWASAKI			
KX	125	86 - 86	**RSI**
KX	125	87 - 88	**SI**
KL	250 Super Sherpa	00 - 02	**SI**

KAWASAKI			
KX	250	86 - 86	**RSI**
KX	250	87 - 88	**SI**
KXT	250 Tecate	85 - 86	**SI**
EX	500	94 - 96	**LS**
EX	500 Ninja	94 - 97	**LS**
KX	500	86 - 86	**RSI**
KX	500	87 - 88	**SI**
KLR	650	87 - 07	**SI**
KLR	650	95 - 04	**LS**
KLR	650 Tengai	89 - 92	**LS**
KTM			
GS	125	89 - 90	**SI**
GS	125	92 - 97	**SI**
	250 GS,EXC, Enduro Models	91 - 91	**SI**
GS	250	89 - 90	**SI**
EXC	300	93 - 96	**SI**
MX	300	90 - 90	**SI**
MX	300	92 - 92	**SI**
LC4	350	92 - 95	**SI**
LC4	400	93 - 02	**SI**
LC4	600 Six Days	92 - 92	**SI**
LAVERDA			
	700 El Cid	90 - 90	**HF**
MAICO			
	all models	91 - 91	**SI**

YAMAHA			
YFM	90 RY Raptor	09 - 15	**SI**
YFM	300 Grizzly	12 - 13	**SI**

Available compounds **HF** **SBS 585**

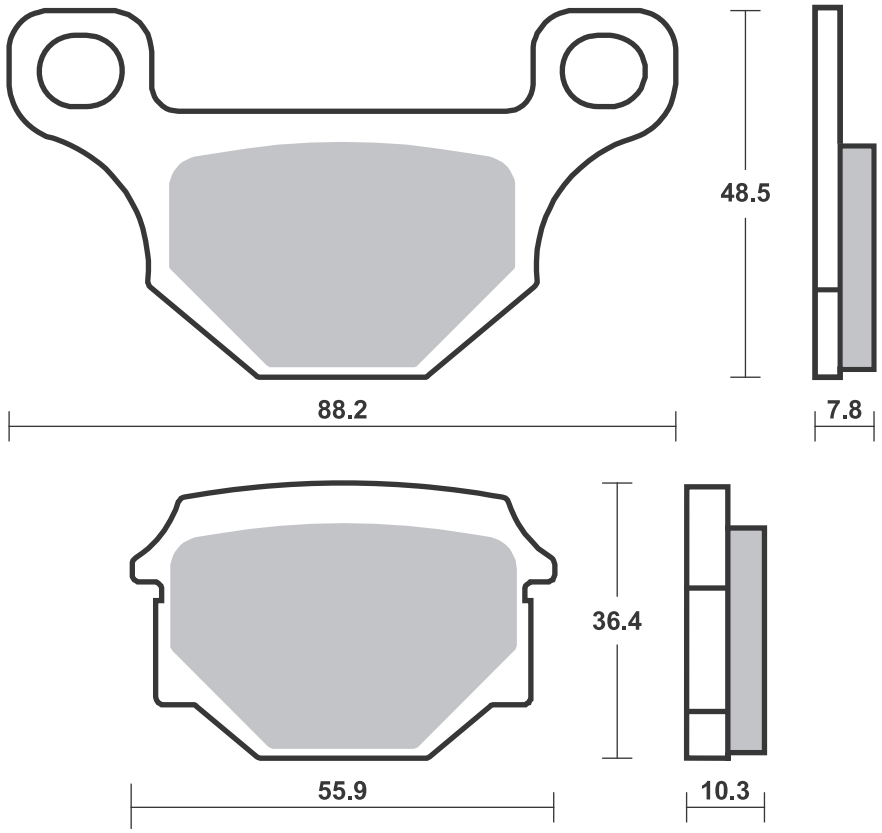

Available compounds **HF • LS • SI • RSI** **SBS 586**

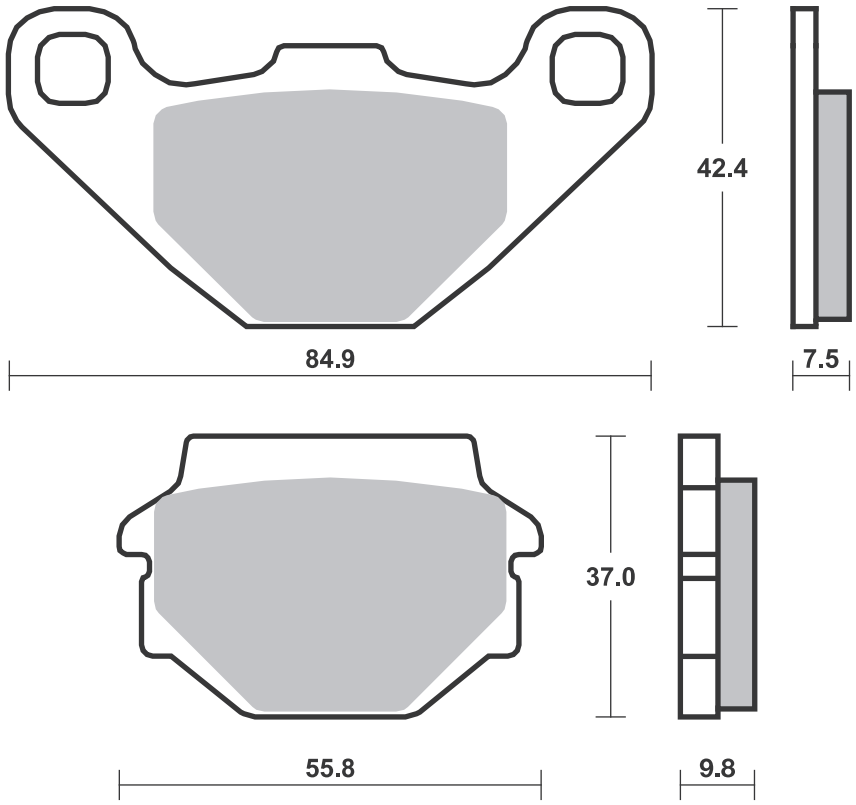

Dimensions in mm / Dimensions en mm • 1” = 25.4 mm , 1 mm = 0.04”

SBS 588 Recommended compound

APRILIA				
NA	850	Mana GT, ABS	09-13	**HF**
NA	850	Mana, ABS	08-11	**HF**
CAGIVA				
	125	Blues	87-85	**HF**
FANTIC				
	250	Raider	85-85	**HF**
GILERA				
	125	Fast Bike	88-89	**HF**
	125	KK, KR, KZ	86-91	**HF**
	125	R1, R1S	90-92	**HF**
ER	125	Rally	87-87	**HF**
MXR	125		90-90	**HF**
RRT	125	Nebraska	87-87	**HF**
RX	125	Arizona Hawk	85-85	**HF**
	200	Arizona Hawk	85-85	**HF**
	200	ER	87-87	**HF**

GILERA				
	250	Arizona Rally	08-08	**HF**
	350	Dakota	85-85	**HF**
XRT	350		90-90	**HF**
	500	Dakota	86-86	**HF**
RC	600		88-88	**HF**
XRT	600		89-89	**HF**
MOTO-GUZZI				
V7	750	Racer	12-14	**HF**
V7	750	Stone	12-14	**HF**
V7 II	750	Racer	15-16	**HF**
V7 II	750	Scrambler	16-16	**HF**
V7 II	750	Special	15-16	**HF**
V7 II	750	Stone	15-16	**HF**
V7 II	750	Stornello	16-16	**HF**
V7 II	750	Stornello Ltd. Edition	17-18	**HF**
V7 III	750	Anniversario	17-18	**HF**
V7 III	750	Carbon	18-19	**HF**

MOTO-GUZZI				
V7 III	750	Euro 4	17-19	**HF**
V7 III	750	Limited	19-19	**HF**
V7 III	750	Milano	18-20	**HF**
V7 III	750	Racer	17-20	**HF**
V7 III	750	Rough	18-20	**HF**
V7 III	750	Special	17-19	**HF**
V7 III	750	Stone	17-20	**HF**
V85	850	TT	19-19	**HF**
V85	850	TT travel	20-20	**HF**
V9	850	Bobber	16-17	**HF**
V9	850	Bobber Sports	19-20	**HF**
V9	850	Roamer	16-17	**HF**
V9	850	X-Track	17-17	**HF**
MOTO-MORINI				
	350	Excalibur	87-89	**HF**
	350	Kanguro	88-88	**HF**
	501	Camel	88-88	**HF**
	501	Excalibur	87-87	**HF**

SBS 589 Recommended compound

YAMAHA				
YZ	65		19-21	**RSI**
YZ	80		86-92	**SI**
YZ	80		93-01	**RSI**
YZ	85	, LW	02-21	**RSI**
TT-R	125	LW	00-20	**SI**

SBS 590 Recommended compound

YAMAHA				
SRX	600		88-89	**HF**
FZ	750	Genesis	89-92	**HS**
TDM	850		91-95	**HS**
XVZ	1300	A Royal Star	96-07	**LS**
XVZ	1300	AT Royal Star Tour Classic	97-07	**LS**
XVZ	1300	Royal Star Boulevard	99-01	**LS**
XVZ	1300	Royal Star Venture S	08-13	**LS**
XVZ	1300	TF Royal Star Venture	99-01	**LS**
XVZ	1300	Venture Royale	86-89	**HF**
XVZ	1300	Venture Royale	90-95	**LS**
XV	1600	Midnight Star	99-07	**LS**
XV	1600	Road Star	99-07	**LS**
XV	1600	Silverado	99-07	**LS**

YAMAHA				
XV	1700	Road Star S	08-14	**LS**
XV	1700	Road Star Silverado S	11-14	**LS**
XV	1700	Road Star Warrior	02-02	**LS**

Available compounds **HF** **SBS 588**

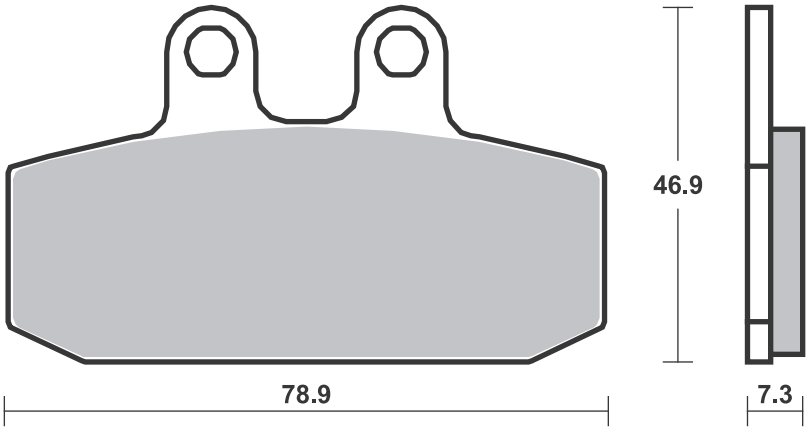

Available compounds **HF • CS • SI • RSI** **SBS 589**

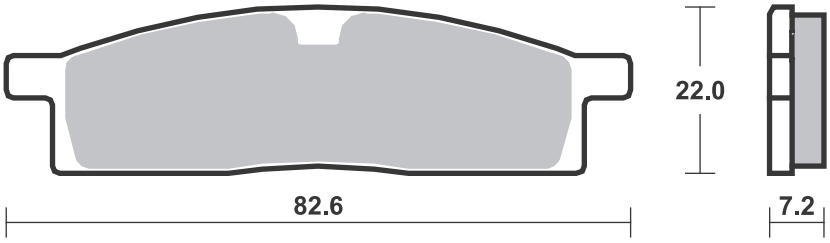

Available compounds **HF • HS • LS • DCC** **SBS 590**

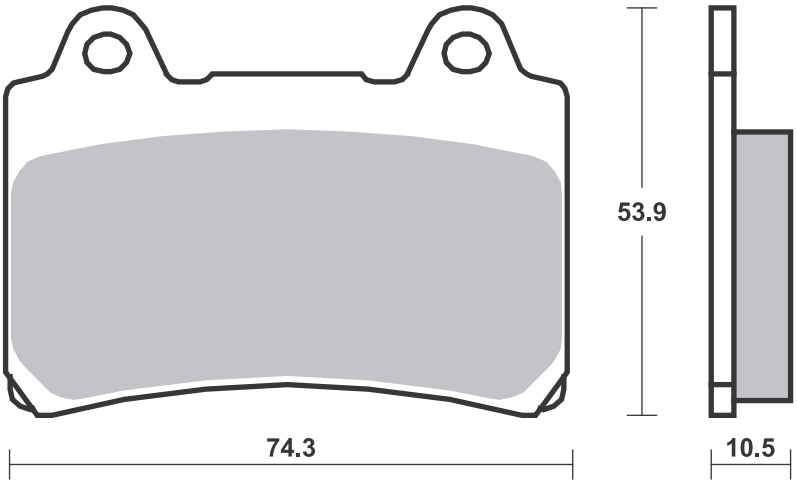

Dimensions in mm / Dimensions en mm • 1” = 25.4 mm , 1 mm = 0.04”

SBS 591 Recommended compound

KAWASAKI					
KSF	250	Mojave	87-02	**SI**	
KXF	250	Tecate	87-88	**SI**	
KXT	250	Tecate	87-88	**SI**	
KEF	300	Lakota	95-04	**SI**	
SUZUKI					
LT	230		85-88	**SI**	
LT	230		86-93	**SI**	
LT	250		85-94	**SI**	
LT	250		89-90	**SI**	
LT	500		87-95	**SI**	

SBS 592 Recommended compound

ARCTIC CAT					
	400	DVX	04-08	**SI**	
HONDA					
CR	85	R, R Expert	03-12	**RSI**	
CRF	150	R	07-21	**RSI**	
ATC	200	X	83-85	**SI**	
ATC	200	X	86-87	**SI**	**SI**
TRX	250	EX Sportrax	01-08	**SI**	
TRX	250	X	08-13	**SI**	
TRX	300	EX	93-00	**SI**	
TRX	300	EX Sportrax	01-08	**SI**	**SI**
TRX	300	X	09-09	**SI**	**SI**
TRX	400	EX Sportrax	01-08	**SI**	**SI**
TRX	400	Fourtrax EX	99-00	**SI**	**SI**
TRX	400	X	09-12	**SI**	**SI**
TRX	420	FA / FPA	09-13	**SI**	
TRX	420	FPE / FPM 4x4	09-14	**SI**	
TRX	450	EX Sportrax	01-05	**SI**	**SI**
KAWASAKI					
KX	80		88-00		**RSI**
KX	85		01-21		**RSI**
KX	85	II	01-21		**RSI**
KX	100		88-21		**RSI**
KLX	140	, L	08-21		**SI**
KSF	250	Mojave	87-02		**SI**
KXF	250	Tecate	87-88		**SI**
KXT	250	Tecate	87-88		**SI**
KEF	300	Lakota	95-04		**SI**

KAWASAKI					
KFX	400		02-05	**SI**	
KFX	450		07-15		**SI**
SUZUKI					
RM	100		03-03		**RSI**
LT	230		86-93		**SI**
LT	250		89-90		**SI**
LT-Z	400	Quad Sport	02-19	**SI**	
RM	500		87-89		**RSI**
TM					
	80	Junior	96-00		**RSI**
YAMAHA					
YZ	65		19-21		**RSI**
YZ	80		93-01		**RSI**
YZ	85	, LW	02-21		**RSI**
YFS	200	R Blaster	03-06		**SI**
YFM	250	Raptor	09-14		**SI**
YFM	350	FXG-FXM Wolverine	95-11		**SI**
YFM	350	R Raptor	04-14	**SI**	**SI**
YFM	350	XG,XH Warrior	95-96		**SI**
YFM	350	XT, XU Warrior	87-88		**SI**
YFZ	350	Banshee	87-06		**SI**
YFZ	450	S	04-05		**SI**
YFM	600	4x4 Grizzly	98-01	**SI**	
YFM	660	FWAP 4x4 Grizzly	02-08	**SI**	

YAMAHA					
YFM	660	RN Raptor	01-09	**SI**	**SI**

Available compounds **HF • SI • RSI** **SBS 591**

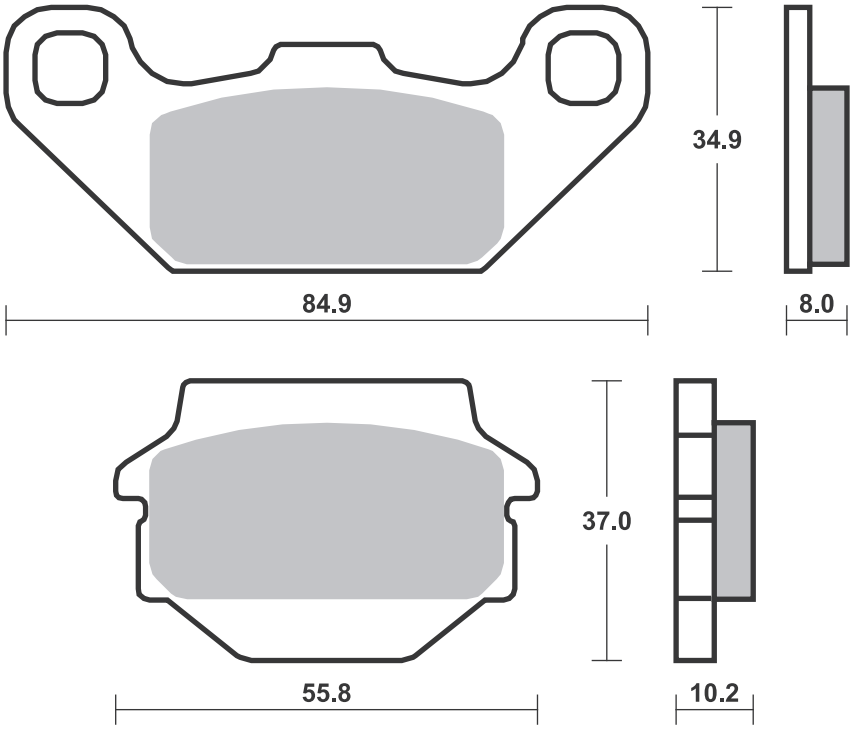

Available compounds **HF • LS • CS • SI • RSI** **SBS 592**

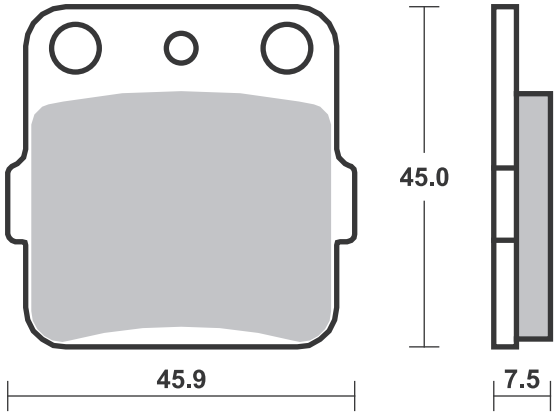

SBS 593 Recommended compound

HONDA					
VTR	250		90-90	**HS**	
CBR	600 F Hurricane		87-90	**HS**	
CBR	600 F, Super Sport		91-94	**HS**	

SBS 594 Recommended compound

CAGIVA					
	125 Cruiser		88-89	**HF**	
	350 Elefant		86-89	**HF**	
	650 Elefant		86-87	**HF**	
DUCATI					
	350 Indiana		86-91	**HF**	
	650 Indiana		86-89	**HF**	
	750 Indiana		85-86	**HF**	
GILERA					
	350 Dakota		86-89	**HF**	
LAVERDA					
OR	600 Atlas		86-90	**HF**	
MOTO-MORINI					
	350 Excalibur		86-86	**HF**	**HF**

MOTO-MORINI					
	350 Indiana		88-88	**HF**	
	501 Excalibur		86-91	**HF**	**HF**
	501 Excalibur		89-89	**HF**	
	501 New York		89-89	**HF**	
	650 Indiana		88-88	**HF**	
	750 Indiana		88-88	**HF**	

SBS 595 Recommended compound

BETA					
ALP	125		90-90	**HF**	
TR	125 32,33		86-87	**HF**	
TR	125 34		88-88	**HF**	
TR	240 33		86-88	**HF**	
	260 Synt		92-92	**HF**	
TR	260 34		86-88	**HF**	
FANTIC					
	125 Trial				
		Professional	87-87	**HF**	**HF**
	125 Trial Progress 1		87-87	**HF**	
HP1	125 Strada		85-85	**HF**	
	201 Trial Progress 2		87-87	**HF**	
	241 Trial Progress 2		87-87	**HF**	
	243 Trial		87-90	**HF**	**HF**
	301 Trial		85-91	**HF**	
	301 Trial Progress 2		87-87	**HF**	

FANTIC					
	303 Trial				
		Professional	87-87	**HF**	**HF**
	343 Trial Progress 2		87-87	**HF**	**HF**
MALAGUTI					
	50 Fifty Full, CX,				
		Top	85-85	**HF**	
	50 Fifty Mistral		90-95	**HF**	
CH	50		86-86	**HF**	
MGX	450 Ronco		87-11	**HF**	
TOMOS					
BT	50 S		89-89	**HF**	
N	50 AT, BT		91-95	**HF**	
CTX	80		89-89	**HF**	

Available compounds **HF • HS • RST • DCC • RQ** **SBS 593**

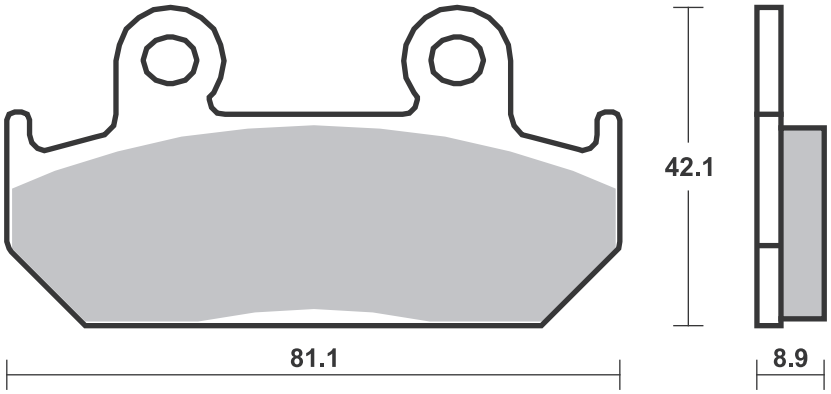

Available compounds **HF** **SBS 594**

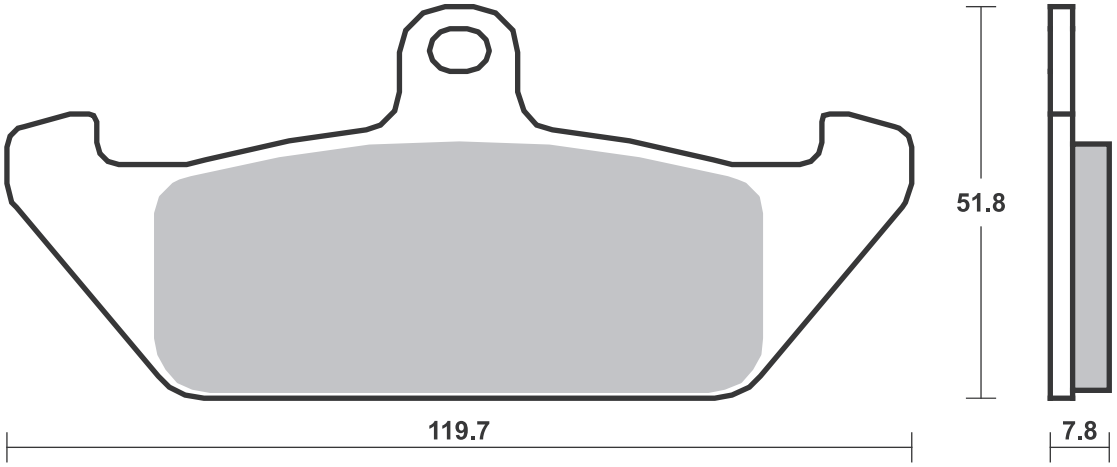

Available compounds **HF** **SBS 595**

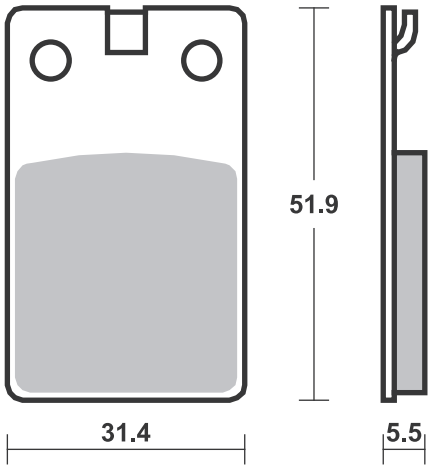

Dimensions in mm / Dimensions en mm • 1” = 25.4 mm , 1 mm = 0.04”

SBS 596 Recommended compound

MALAGUTI				
MDX	50	Gold Enduro	87-87	**HF**
MLX	50	Enduro	87-87	**HF**
MOTO-GUZZI				
NTX	750		90-93	**HS**
YAMAHA				
RT	180		90-93	**HF**
TT	600		89-89	**HF**

SBS 597 Recommended compound

HYOSUNG				
GT	250	Comet	02-02	**HS**
	600	Comet	02-02	**HS**
KAWASAKI				
EX	250	R Ninja	88-07	**HF**
EX	500		87-89	**HF**
EX	500		90-93	**HS**
EX	500	Ninja	94-97	**HS**
ZR	550	Zephyr	90-99	**HS**
ZL	600	B2 Eliminator	95-98	**HS**
ZX	600	Ninja	90-93	**LS**
ZX	600	Ninja R	88-97	**HS** **LS**
ZX-6R	600	(ZX6)	90-93	**LS**
KLR	650	Tengai	89-92	**HS**
ZR	750	Zephyr	91-95	**HS** **LS**
ZG	1000	Concours	94-03	**HS**
ZX-10	1000		88-90	**HS** **LS**
ZR	1100	Zephyr	92-95	**LS**
ZZR	1100		90-93	**LS**
SUZUKI				
GSF	400	Bandit	91-92	**HS**
GS	450		90-90	**HS** **LS**
VX	800	L-P	90-93	**HS**
GSX	1100	G	94-95	**HS**

Available compounds **HF • HS** **SBS 596**

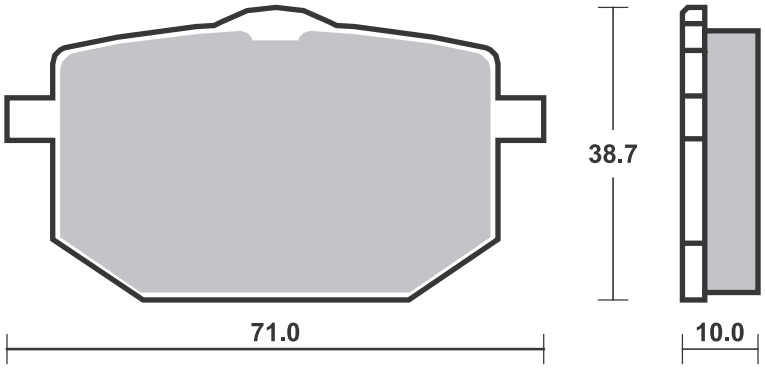

Available compounds **HF • HS • LS • RQ** **SBS 597**

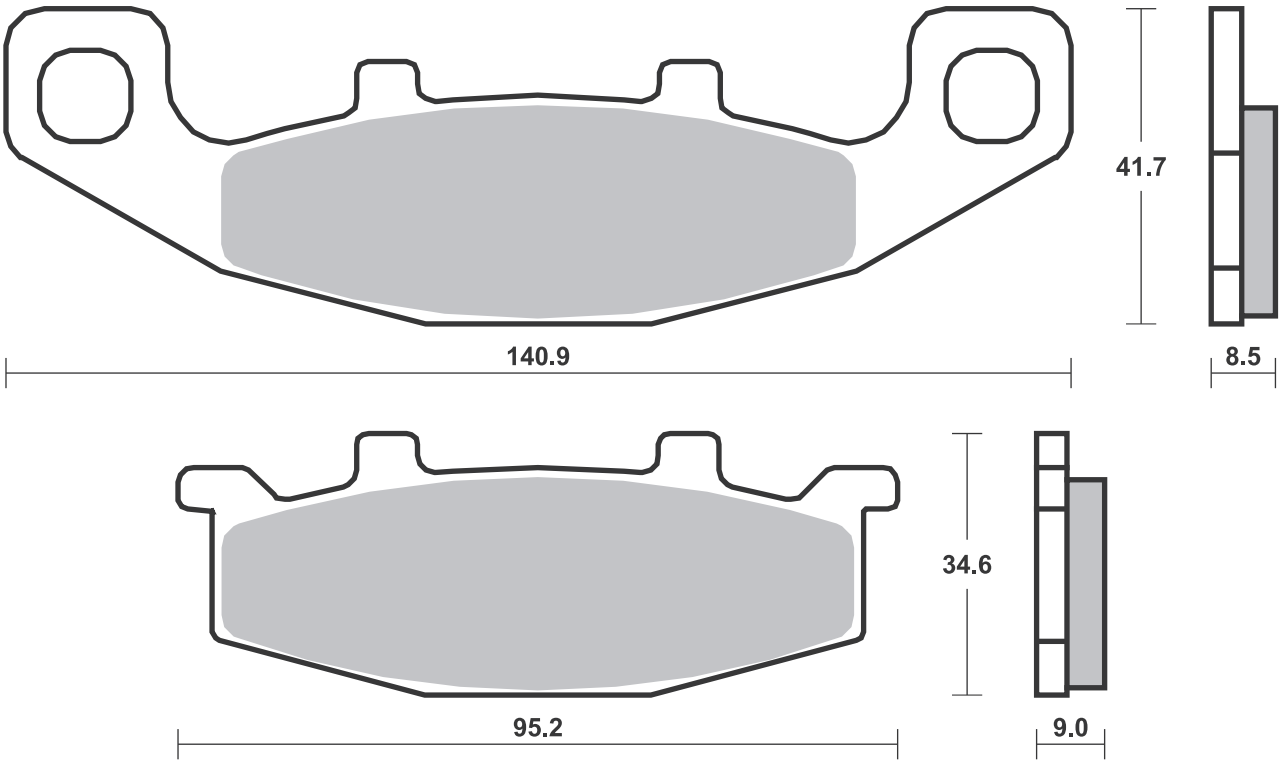

Dimensions in mm / Dimensions en mm • 1” = 25.4 mm , 1 mm = 0.04”

SBS 598 Recommended compound

MOTO-GUZZI			
V65	650 GT	90-94	**HF**

SBS 599 Recommended compound

A.P. RACING CALIPERS
CP-3369-2E0/3E0
CP-3385-2E0/3E0
CP-3386-2E0/3E0
CP-3569-2S0/3S0
CP-3769-2S0/3S0

SBS 600 Recommended compound

HONDA			
VFR	700 F, F2	86-87	**HS**
VFR	750 F	86-87	**HS**
CBR	1000 F	87-88	**HS**

Available compounds **HF** **SBS 598**

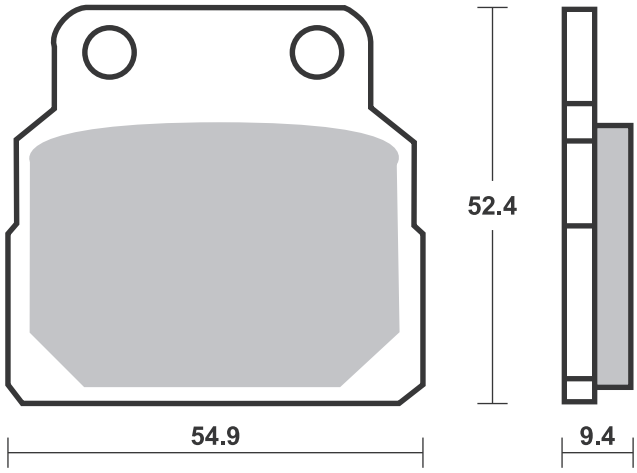

Available compounds **RQ** **SBS 599**

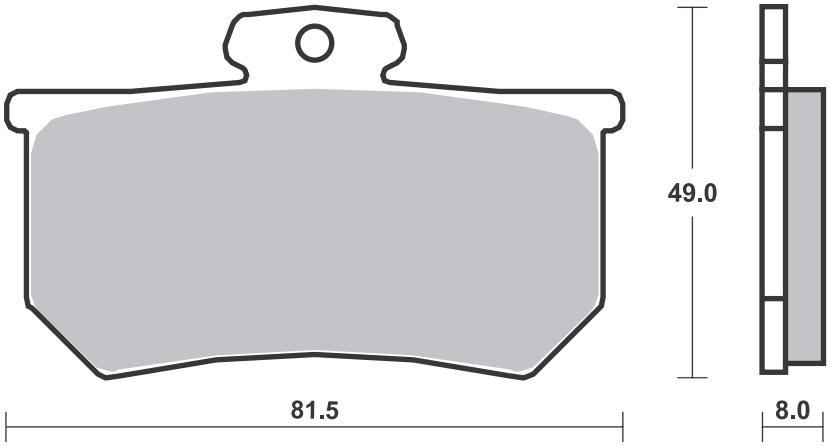

Available compounds **HF • HS** **SBS 600**

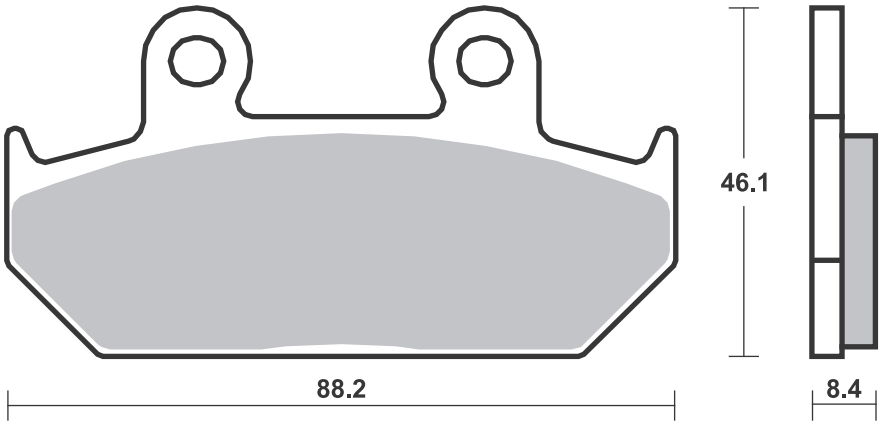

Dimensions in mm / Dimensions en mm • 1” = 25.4 mm , 1 mm = 0.04”

SBS 601 Recommended compound

GILERA					
	125	Crono	92-95	**HF**	
	125	Freestyle	92-95	**HF**	
	125	MX1, MRX, SP01	89-93	**HF**	
	125	SP02	90-94	**HF**	
CX	125		91-95	**HF**	
	600	Nordwest	91-94	**HF**	
KTM					
MX	250	VC, Enduro	87-90	**HF**	**HF**
EXC	350		87-87	**HF**	**HF**
GS	350		87-87	**HF**	**HF**
MX	350		87-87	**HF**	**HF**
	400	Enduro	87-90	**HF**	**HF**
MX	500		87-87	**HF**	**HF**
LC4	550		87-89	**HF**	**HF**
MX	550		87-90	**HF**	**HF**

KTM					
EXC	600		87-87	**HF**	**HF**
LC4	600		88-91	**HF**	**HF**
LC4	600	Enduro	88-91	**HF**	**HF**
MC	600		88-88	**HF**	**HF**
MX	600		87-87	**HF**	**HF**

SBS 602 Recommended compound

KAWASAKI					
KX	125		87-88	**HF**	
KX	250		87-88	**HF**	
KX	500		87-88	**HF**	
KLR	650		87-07	**HF**	

Available compounds **HF • RST** **SBS 601**

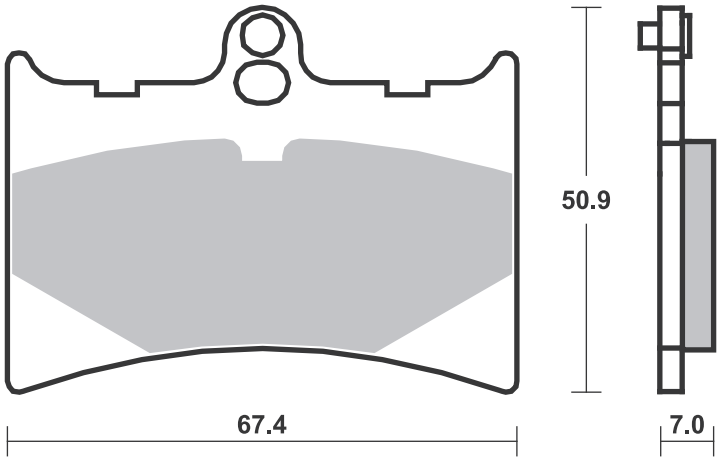

Available compounds **HF** **SBS 602**

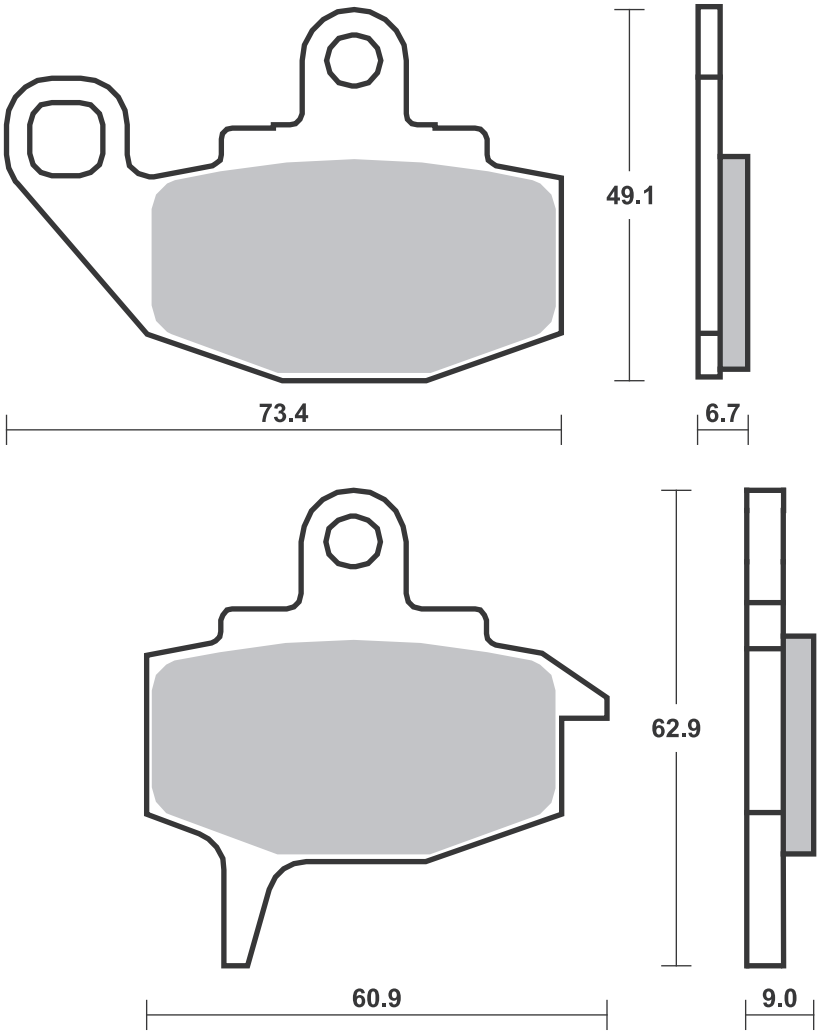

Dimensions in mm / Dimensions en mm • 1” = 25.4 mm , 1 mm = 0.04”

SBS 603 Recommended compound

HONDA				
CR	125 RH, RJ, RK	87-94	**RSI**	
CR	250 R	87-94	**RSI**	
NX	250	88-90	**HF**	
TRX	250 R	86-89	**SI**	
TRX	250 R Fourtrax	88-88	**SI**	
TRX	250 X Fourtrax	87-87	**SI**	
XR	250 L	91-92	**HF**	
XR	250 R	88-95	**SI**	
ATC	350 X	86-89	**SI**	
CR	500 R	87-94	**RSI**	
XR	600 R	88-92	**SI**	

SBS 604 Recommended compound

BIMOTA				
BBX	508 Enduro	12-12		**SI**
BRAKING				
Rear cross (2 piston)				
CPI				
	125 Sahel	02-02		**HF**
GAS GAS				
EC	125	00-06		**SI**
MC	125	03-13		**RSI**
SM	125	02-13		**HF**
EC	200	00-09		**SI**
EC	200 Hobby	07-16		**SI**
EC	250	00-11		**SI**
EC	250 fse	02-11		**SI**
MC	250	00-13		**SI**
SM	250	02-13		**HF**
EC	300	00-11		**SI**
	400 Pampera	06-09		**SI**
EC	400 fse	02-02		**SI**
SM	400 fse	02-02		**HF**
EC	450 fse	03-15		**SI**
EC	450 FSR	07-16		**SI**
SM	450 fse	03-06		**HF**
SM	450 FSR	07-13		**HF**
EC	515 fsr	08-16		**SI**

HONDA				
CR	80 R, RB	92-02		**RSI**
CR	85 R, R Expert	03-12		**RSI**
NSF	100	06-06		**HF**
CR	125 R	95-01		**RSI**
CR	125 RH, RJ, RK	87-94		**RSI**
CRF	230 L	08-10		**SI**
CRF	230 M	09-12		**SI**
SL	230	97-01		**HF**
CR	250 R	87-01		**RSI**
XR	250 L	91-97		**HF**
XR	250 R	90-95		**SI**
XR	250 S	96-00		**HF**
XR	400 R	96-04		**SI**
XR	440 R	00-03		**SI**
CR	500 R	87-01		**RSI**
XR	600 R	91-00		**SI**
XR	650 L	93-18		**HF**
XR	650 R	00-11		**SI**
HYOSUNG				
XRX	400	05-08		**HF**
KAWASAKI				
KX	125	95-08		**RSI**
KLX	250	98-07		**SI**
KLX	250	14-18		**HF**
KLX	250 Camo	18-18		**HF**
KLX	250 S	09-14		**HF**
KLX	250 SF	09-10		**HF**

KAWASAKI				
KX	250	95-08		**RSI**
KLX	300 R	97-07		**SI**
KLX	400 R	03-04		**SI**
KLX	400 SR	03-04		**HF**
KX	500	96-04		**RSI**
KLX	650 R D1	96-96		**SI**
SHERCO				
SE	450 4.5i Enduro	04-04		**SI**
SUZUKI				
RM	125	96-09		**RSI**
RM	250	96-09		**RSI**
RMX	250 X-K1	99-99		**SI**
DR-Z	400 S /E	00-12		**HF**
DR-Z	400 SM	05-10		**RSI**
TM				
MX	85	01-12		**RSI**
EN	125 Enduro	01-04		**SI**
MX	125	01-04		**RSI**
SMR	125	05-05		**RSI**
EN	250 Enduro	01-04		**SI**
EN	250 F Enduro	01-04		**SI**
MX	250	01-04		**RSI**
MX	250 F	01-04		**RSI**
EN	300 Enduro	01-04		**SI**
MX	300	01-04		**RSI**
	400 F	01-01		**RSI**

Applications for this part number continues on following page.

Available compounds **HF • SI • RSI** **SBS 603**

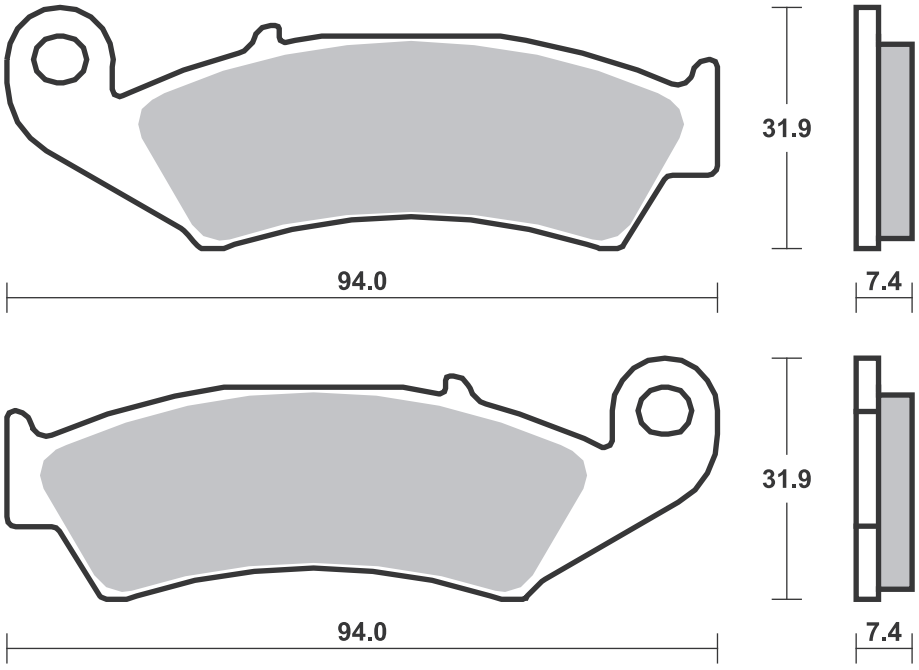

Available compounds **HF • RQ • CS • SI • RSI** **SBS 604**

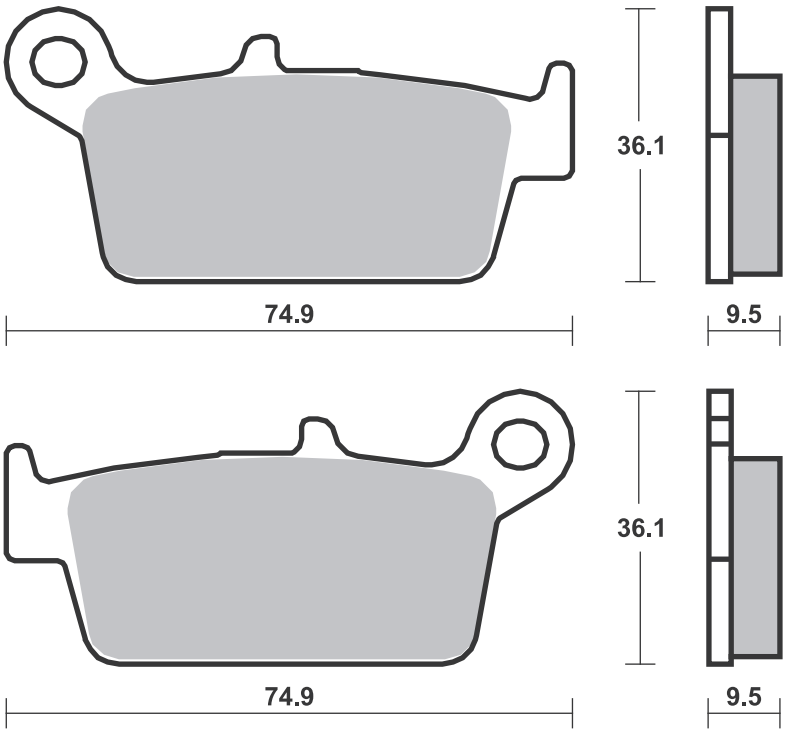

SBS 604 Recommended compound

TM			
	400 F Enduro	01 - 01	**SI**
SMF	400 F	02 - 02	**RSI**
SMR	400 F	03 - 03	**RSI**
EN	450 F Enduro	02 - 04	**SI**
MX	450 F	02 - 04	**RSI**
SMR	450 F	04 - 04	**RSI**
SMX	450 F	03 - 04	**RSI**
EN	530 F Enduro	01 - 04	**SI**
MX	530 F	01 - 04	**RSI**
SMR	530 F	03 - 03	**RSI**
SMX	600 F	03 - 03	**RSI**
SMX	660 F	04 - 04	**RSI**
YAMAHA			
WR	125	98 - 02	**SI**
YZ	125	98 - 02	**RSI**
WR	250	98 - 02	**SI**
WR	250 F	01 - 02	**SI**
YZ	250	98 - 02	**RSI**
YZ	250 F	01 - 02	**RSI**
WR	400 F	99 - 00	**SI**
YZ	400 F	99 - 99	**RSI**
WR	426 F	01 - 02	**SI**
YZ	426 F	00 - 02	**RSI**

SBS 606 Recommended compound

MOTO-MORINI			
	125 KJ	84 - 88 **HF**	
	350 Excalibur	87 - 89	**HF**
	350 K2	84 - 87	**HF**
	501 Excalibur	87 - 87	**HF**

Available compounds **HF • RQ • CS • SI • RSI** **SBS 604**

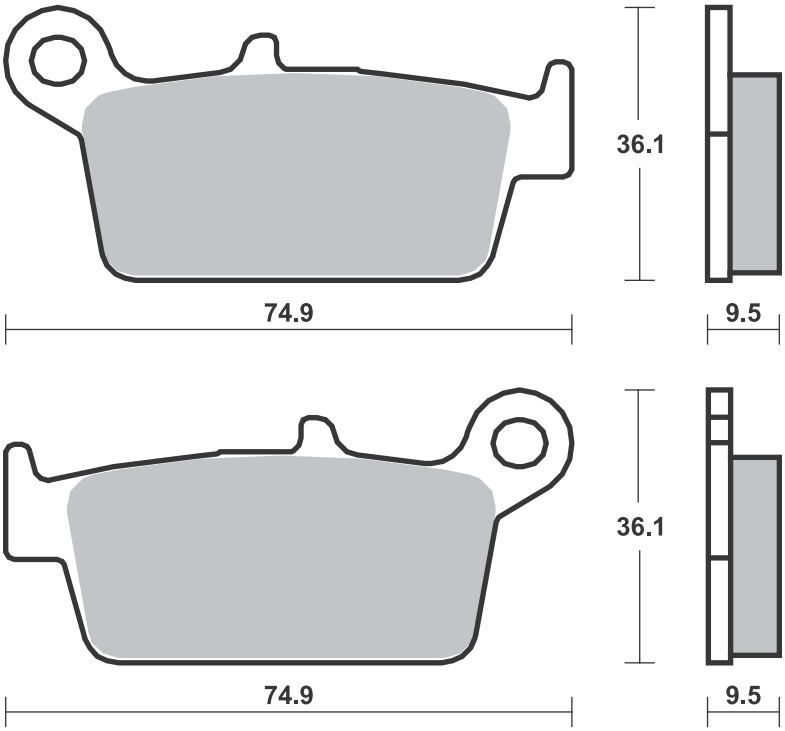

Available compounds **HF** **SBS 606**

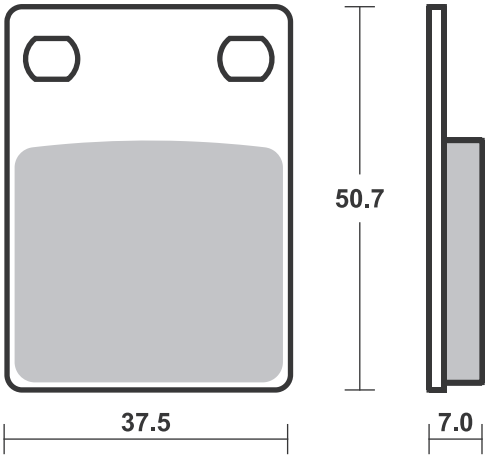

SBS 607 Recommended compound

BETA				
ALP	125		90-90	**HF**
TR	125	34	88-88	**HF**
TR	260	34	86-88	**HF**
DERBI				
	75	GPR	89-89	**HF**
GPR	75	Sport	92-92	**HF**
MALAGUTI				
MDX	50	Gold Enduro	87-87	**HF**
MLX	50	Enduro	87-87	**HF**

SBS 608 Recommended compound

CAGIVA				
	125	Cross	86-86	**SI**
	125	Cruiser	89-89	**HF**
	125	Tamanaco	87-92	**HF**
	125	Tamanaco	89-89	**HF**
WMX	125		88-88	**SI**
	250	Cross	86-86	**SI**
WMX	250		89-90	**SI**
GILERA				
	125	Apache	91-94	**HF**
RC	125	Top Rally	90-93	**HF**
RC	600	Top Rally	90-94	**HF**
HUSABERG				
		all models	89-92	**SI**
	350		91-92	**SI**
	500		91-98	**SI**
	501	Enduro	91-94	**SI**
	600	Enduro	91-94	**SI**

HUSQVARNA				
		all models TE, TC,WR,CR,AE	89-89	**SI**
CR/WR	125		91-91	**SI**
WR	125		85-90	**SI**
WRK	125		90-90	**SI**
WR	240		87-91	**SI**
WRK	240		90-90	**SI**
CR	250		91-91	**SI**
WR/XC	250		87-90	**SI**
WR	260		90-93	**SI**
TE	350	Enduro	90-90	**SI**
WR	400		87-88	**SI**
	430	Auto	87-87	**SI**
CR	430		87-89	**SI**
WR	430		87-89	**SI**
XC	430		87-88	**SI**
XC	500		87-88	**SI**
	510		87-90	**SI**
TC	610	Cross	91-91	**SI**

HUSQVARNA				
TE	610		91-95	**SI**
MOTO-MORINI				
	350	Coguaro	90-95	**HF**
	350	Coguaro, New York	90-94	**HF**
	350	Dart	88-88	**HF**
RLX	350	Excalibur	90-92	**HF**
	400	Dart	89-89	**HF**
	501	Coguaro	89-89	**HF**
RLX	501	Excalibur	90-90	**HF**

SBS 610 Recommended compound

HONDA				
FL	350	R Odyssey	85-87	**HF**
FL	400	R Pilot	89-90	**HF**

Available compounds **HF** **SBS 607**

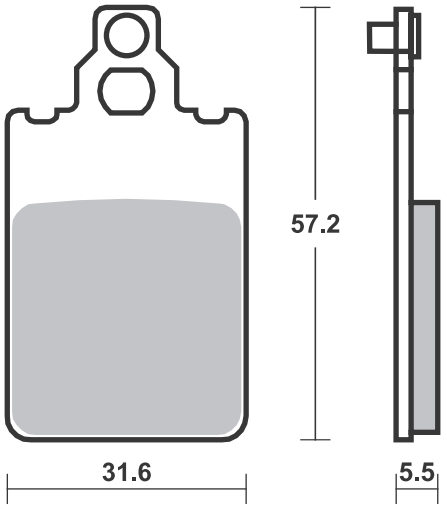

Available compounds **HF • SI • RSI** **SBS 608**

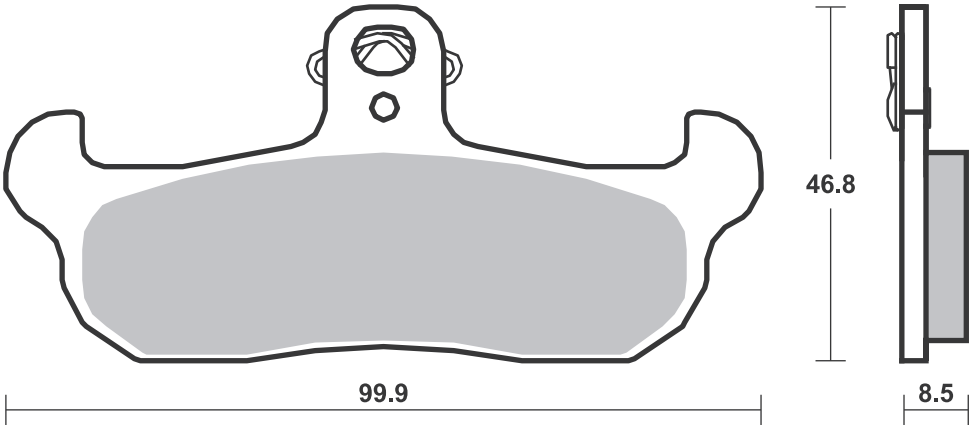

Available compounds **HF** **SBS 610**

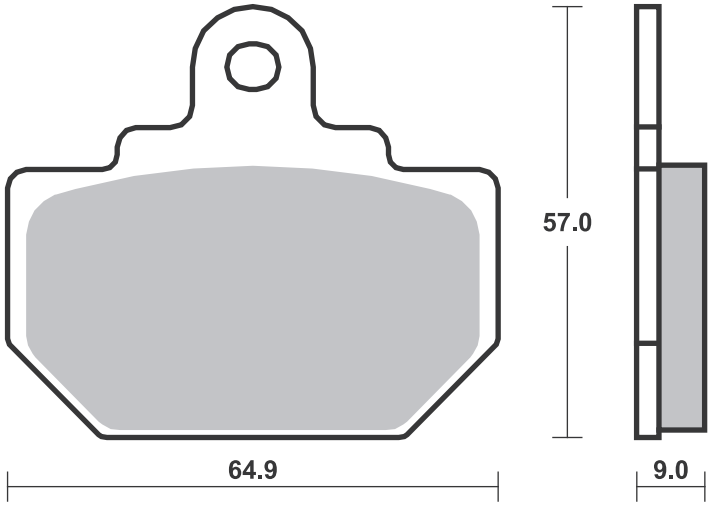

Dimensions in mm / Dimensions en mm • 1” = 25.4 mm , 1 mm = 0.04”

SBS 611 Recommended compound

CAN-AM					
	800	Commander	11-14	**SI**	**SI**
CF MOTO					
	550	U-Force	15-16	**SI**	
	550	Z-Force	15-16	**SI**	
	800	Z-Force EX	15-15	**SI**	
DERBI					
DXR	200	Quad			
		(Front drum)	04-05		**SI**
DXR	250	Quad			
		(Front drum)	04-05		**SI**
HISUN					
HS	400	UTV	15-17	**SI**	
HS	500	UTV	15-17	**SI**	
HS	700	UTV	15-17	**SI**	
HS	700	UTV Left			
		(2 cal.rear)	15-17	**SI**	**SI**
HS	800	UTV			
		(2 cal.rear)	15-17	**SI**	**SI**
HONDA					
NSR	150		02-02		**HF**
HUSQVARNA					
		all models CR,			
		TC,TE,WR	92-94	**SI**	
HYOSUNG					
	125	Aquila	00-04	**HF**	
KAWASAKI					
KLX	125		10-14	**HF**	
KLX	125	D-Tracker	10-14	**HF**	
KX	125		89-93	**RSI**	
KLX	140	, L	08-21	**SI**	
KLX	150	D-Tracker	16-18	**HF**	
KLX	150	L	14-15	**HF**	
KDX	200		93-93	**SI**	
KDX	250	SR	91-94	**SI**	
KLX	250		14-18	**HF**	
KLX	250	Camo	18-18	**HF**	
KLX	250	S	09-14	**HF**	
KLX	250	SF	09-10	**HF**	
KX	250		89-93	**RSI**	
KLF	300	Bayou 4x4	89-05	**SI**	
KLF	400	Bayou	93-99	**SI**	
KX	500		89-93	**RSI**	
KLR	650		08-18	**HS**	
KLR	650	Camo	08-18	**HS**	
KVF	650	Brute Force			
		4x4i	05-11	**SI**	
KRF	750	Teryx 4x4	08-13	**SI**	
KVF	750	Brute Force			
		4x4i	05-15	**SI**	
	800	Mule Pro FX	15-17	**SI**	
KRF	800	Teryx			
		BEF/CEF/DEF	14-17	**SI**	
KRT	800	Teryx 4			
		BEF/CEF/DEF	14-17	**SI**	
ZX	1000	H2 SX	18-19		**LS**
ZX	1000	H2 SX SE	18-19		**LS**
ZX	1000	H2 SX SE+	19-21		**LS**
SUZUKI					
RM	125		87-87	**SI**	
RM	125		88-90	**RSI**	
TS	125		89-96	**HF**	
DR	250		90-95	**HF**	
RM	250		87-90	**RSI**	
RMX	250		89-95	**RSI**	
LT-F	300	King Quad	02-02	**SI**	
DR	350		90-99	**HF**	
LT-R	450		06-12	**SI**	
LT-A	500	FY			
		Quadmaster	00-08	**SI**	
LT-F	500	F	98-07	**SI**	
RM	500		87-89	**RSI**	
TRIUMPH					
	750	Trident	91-98	**HS**	**LS**
	800	America	03-06		**LS**
	800	Bonneville	01-04		**LS**
	800	Bonneville			
		America	02-06		**LS**
	800	Bonneville			
		T100			
		Centennial			
		Edition	02-04		**LS**
	800	Bonneville			
		T100			
		Paul Smith	06-08		**LS**
	800	Speedmaster	03-04		**LS**
	900	America	07-16		**LS**
	900	Bonneville	09-11		**LS**
	900	Bonneville			
		Newchurch	15-15		**LS**
	900	Bonneville SE	09-13		**LS**
	900	Bonneville			
		Spirit	15-15		**LS**
	900	Bonneville			
		Street Cup	17-18		**LS**
	900	Bonneville			
		T100	05-20		**LS**
	900	Bonneville			
		T100 Black	16-20		**LS**
	900	Bonneville			
		T214	15-15		**LS**
	900	Daytona,			
		Sprint	93-93	**HS**	**LS**
	900	Scrambler	06-16		**LS**
	900	Speedmaster	05-15		**LS**
	900	Street Cup	17-20		**LS**
	900	Street			
		Scrambler	17-20		**LS**
	900	Street Twin	16-20		**LS**
	900	T100 Bud			
		Ekins	20-20		**LS**
	900	Thruxton	04-05		**LS**
	900	Thruxton Ace	15-15		**LS**
	900	Tiger	93-98	**HS**	**LS**
	900	Trident	91-98	**HS**	**LS**
	900	Trophy	91-95	**HS**	**LS**
T509	900	Speed Triple	97-01		**LS**
T595	950	Daytona	96-98		**LS**
	955	Daytona			
		Centennial	02-04		**LS**
	955	Daytona			
		to VIN 132512	99-06		**LS**
	955	Speed Triple	99-06		**LS**
	955	Sprint RS	00-05		**LS**
	955	Sprint ST	99-04		**LS**
	1000	Trophy	91-95	**HS**	**LS**
TRIUMPH					
	1050	Speed 94	15-16		**LS**
	1050	Speed 94R	15-16		**LS**
	1050	Speed Triple	05-17		**LS**
	1050	Speed Triple R	12-18		**LS**
	1050	Speed Triple			
		RS	16-20		**LS**
	1050	Speed Triple S	16-20		**LS**
	1050	Sprint GT ABS	10-15		**LS**
	1050	Sprint GT SE			
		ABS	10-15		**LS**
	1050	Sprint ST	05-11		**LS**
	1050	Tiger Sport	15-19		**LS**
	1200	Bonneville			
		T120	16-20		**LS**
	1200	Bonneville			
		T120 Ace	19-20		**LS**
	1200	Bonneville			
		T120 Black	16-20		**LS**
	1200	Bonneville			
		T120			
		Diamond Ed.	19-20		**LS**
	1200	Speed Twin	20-20		**LS**
	1200	T120 Bud			
		Ekins	20-20		**LS**
	1200	Thruxton	16-19		**LS**
	1200	Thruxton R	16-19		**LS**
	1200	Thruxton RS	20-20		**LS**
	1200	Tiger Explorer	12-17		**LS**
	1200	Tiger XCA	18-20		**LS**
	1200	Tiger XCX	18-20		**LS**
	1200	Tiger XR	18-19		**LS**
	1200	Tiger XRT	18-20		**LS**
	1200	Tiger XRX	18-20		**LS**
	1200	Tiger XRX Low	18-20		**LS**
	1200	Trophy	91-95	**HS**	**LS**
	1200	Trophy SE	13-18		**LS**
YAMAHA					
WR	125		91-97	**SI**	
YZ	125		89-97	**RSI**	
WR	200		91-92	**SI**	
TT-R	230		05-05	**SI**	
TT	250		93-03	**SI**	
WR	250		90-97	**SI**	
YZ	250		89-89	**RSI**	
YZ	250	A	90-90	**RSI**	
YZ	250	B1-J1	91-97	**RSI**	
YZ	250	WRA,WRB	90-91	**RSI**	
TT	350		95-00	**SI**	
YFZ	450	S	04-09	**SI**	
YXR	450	Rhino	06-09	**SI**	
WR	500	B	91-91	**SI**	
WR	500	ZD,ZE	92-93	**SI**	
	660	Rhino	05-08	**SI**	
YFM	700	R Raptor	06-08	**SI**	
YFM	700	Raptor	09-14	**SI**	
YXR	700	Rhino	08-14	**SI**	**SI**

Available compounds **HF • HS • LS • RQ • SI • RSI** **SBS 611**

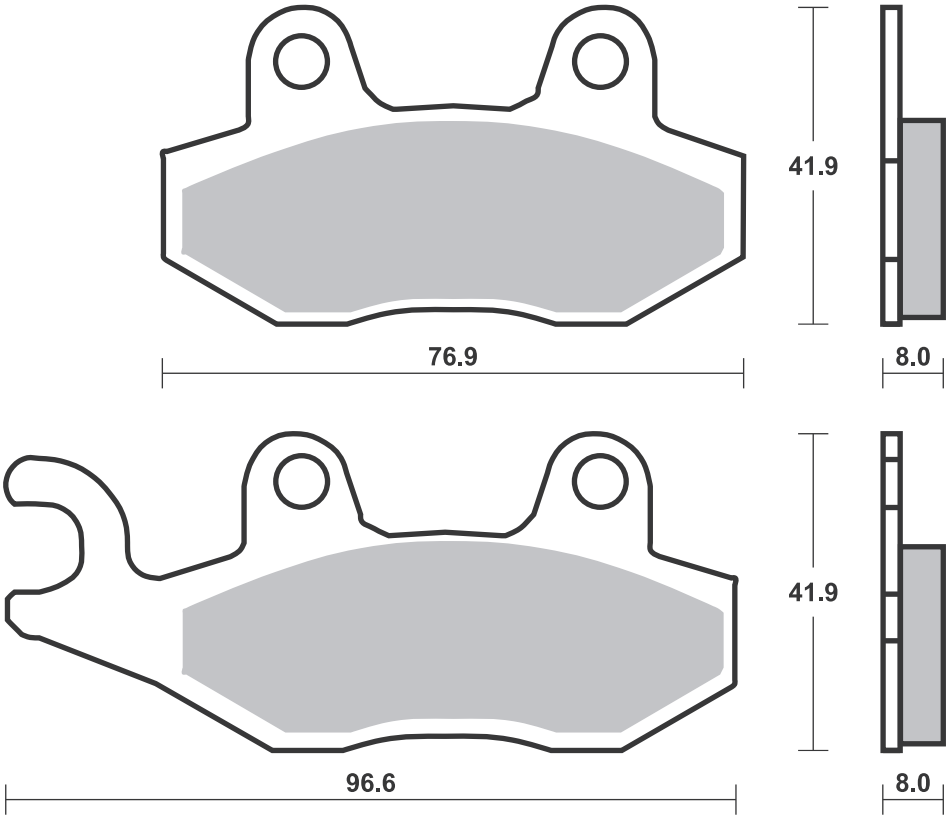

Dimensions in mm / Dimensions en mm • 1” = 25.4 mm , 1 mm = 0.04”

SBS 613 Recommended compound

YAMAHA				
FZR	400	A	90-90	**HS**
SRX	600		90-99	**HS**
FZR	750	R Genesis	87-88	**HF**
FZR	1000	Genesis	87-89	**HF**
FJ	1200		88-90	**HF**
FJ	1200	ABS	91-93	**HS**
XVZ	1300	A Royal Star	96-07	**HS**
XVZ	1300	AT Royal Star Tour Classic	97-07	**HS**
XVZ	1300	Royal Star Boulevard	99-01	**HS**
XVZ	1300	Venture Royale	86-89	**HF**
XVZ	1300	Venture Royale	90-95	**HS**

SBS 614 Recommended compound

BUELL				
	500	Blast	01-09	**HF**
XB9R	984	Firebolt	02-10	**LS**
XB9S	984	Lightning	03-10	**LS**
XB9SX	984	CityX	05-10	**LS**
M2	1200	Cyclone	98-02	**LS**
S1	1200	Lightning	98-02	**LS**
S1	1200	Whitelightning	98-02	**LS**
S3	1200	Thunderbolt	98-02	**LS**
X1	1200	Lightning	01-02	**LS**
XB12R	1200	Firebolt	04-10	**LS**
XB12S	1200	Lightning	04-08	**LS**
XB12Scg	1200	Lightning	06-10	**LS**
XB12Ss	1200	Lightning Long	06-10	**LS**
XB12STT	1200	Super TT	07-10	**LS**
XB12X	1200	Ulysses	06-10	**LS**
HONDA				
RS	250	R	91-92	**HF**
VTR	250		98-02	**HF**
CB-1	400	(CB 400 F)	89-90	**LS**
NT	650	Hawk GT	88-91	**LS**
NT	650	V Deauville	98-00	**LS**
NX	650	Dominator J-K	88-92	**LS**
NC	700	S	12-13	**LS**
NC	700	X	12-13	**LS**
VFR	700	F Interceptor	88-89	**LS**

MOTO-GUZZI				
	1000	Quota	92-92	**HF**
TRIUMPH				
	600	Daytona	03-04	**LS**
	600	Speed Four	03-06	**LS**
TT	600		00-03	**LS**
	650	Daytona	05-06	**LS**
	675	Daytona	06-08	**LS**
	675	Daytona R Triple	11-12	**LS**
	675	Daytona Triple	09-12	**LS**
	675	Street Triple	08-12	**LS**
	675	Street Triple R	09-12	**LS**
	800	Tiger	11-14	**LS**
	800	Tiger XC	11-17	**LS**
	800	Tiger XC ABS	12-14	**LS**
	800	Tiger XCA	15-18	**LS**
	800	Tiger XCR	15-17	**LS**
	800	Tiger XCX	18-20	**LS**
	800	Tiger XR	15-18	**LS**
	800	Tiger XRT	15-18	**LS**
	800	Tiger XRX	15-18	**LS**
	800	Tiger XRX Low	18-20	**LS**
	955	Daytona from VIN 132513	99-01	**LS**

TRIUMPH				
	1200	Bonneville Bobber	17-20	**LS**
	1200	Bonneville Bobber Black	18-19	**LS**
	1200	Speedmaster	18-19	**LS**
YAMAHA				
FZ6R	600		09-14	**LS**

Available compounds **HF • HS • DCC** **SBS 613**

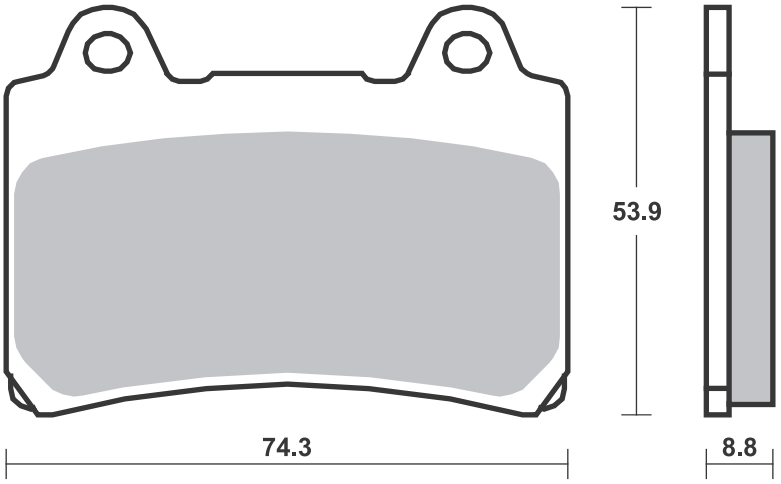

Available compounds **HF • LS • RQ** **SBS 614**

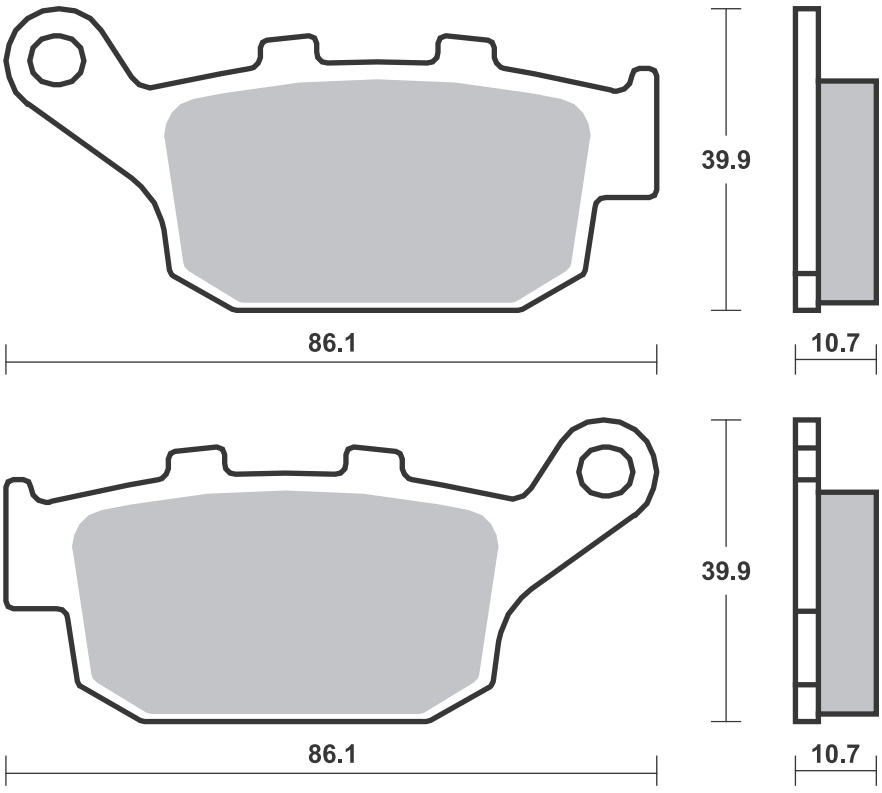

Dimensions in mm / Dimensions en mm • 1” = 25.4 mm , 1 mm = 0.04”

SBS 615 Recommended compound

KAWASAKI			
EX	250 R Ninja	88-07	**HF**
EX	500	94-96	**HS**
ZR	550 Zephyr	90-92	**LS**
SUZUKI			
GSX	1100 G	94-95	**LS**

SBS 616 Recommended compound

YAMAHA			
XV	250 Virago	89-94	**HF**
XV	535 Virago	87-94	**HF**

SBS 617 Recommended compound

YAMAHA			
YT	125 Tri Moto	80-81	**HF**

Available compounds **HF • HS • LS • RQ** **SBS 615**

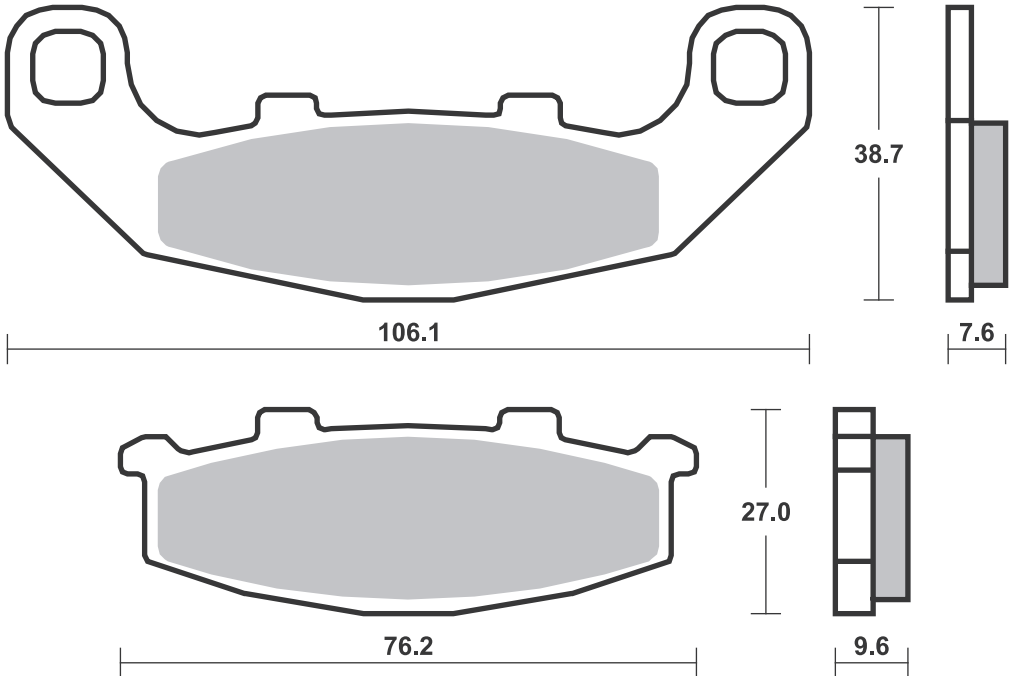

Available compounds **HF** **SBS 616**

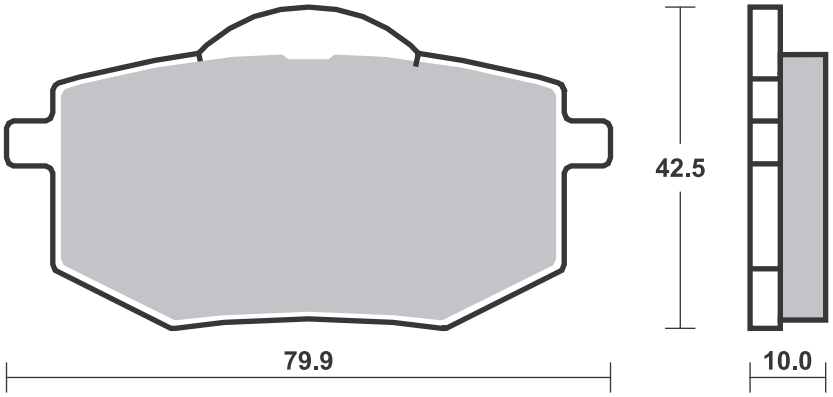

Available compounds **HF** **SBS 617**

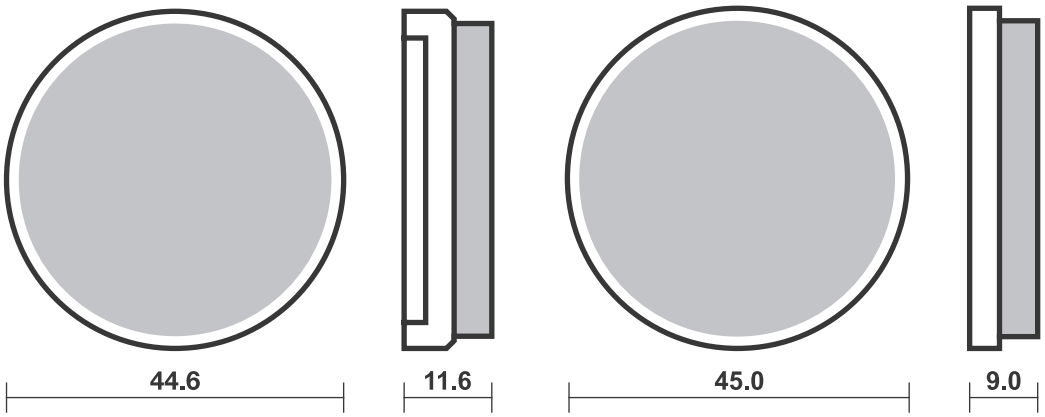

Dimensions in mm / Dimensions en mm • 1” = 25.4 mm , 1 mm = 0.04”

SBS 618 Recommended compound

HONDA					
R	50	Monkey	88-88	**HF**	
RS	125		95-03		**RQ**
RS	125	R	91-94		**HF**
RS	250	R	93-93		**RQ**
MORIWAKI					
MD	250		09-09		**RQ**
SYM					
	50	Feel-big	98-98	**HF**	
	50	Pure	98-98	**HF**	

SBS 619 Recommended compound

YAMAHA					
BW	50		03-05	**HF**	

SBS 620 Recommended compound

SUZUKI					
GSX	600	Katana	88-89	**HF**	
GSX	600	Katana	90-97	**HS**	
GSX	750	Katana	89-96	**HS**	
VX	800	L-P	90-93		**LS**
GSX	1100	F	93-96	**HS**	
GL	1400	Cavalcade	87-88	**HF**	

Available compounds **HF • RQ** **SBS 618**

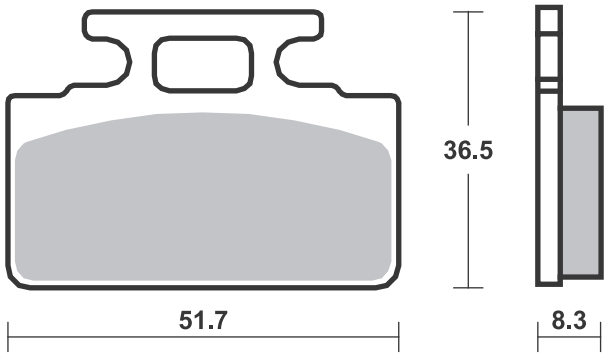

Available compounds **HF** **SBS 619**

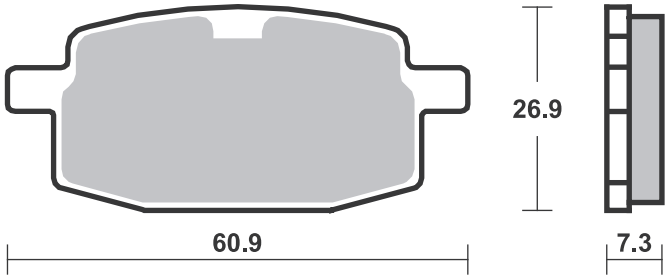

Available compounds **HF • HS • LS** **SBS 620**

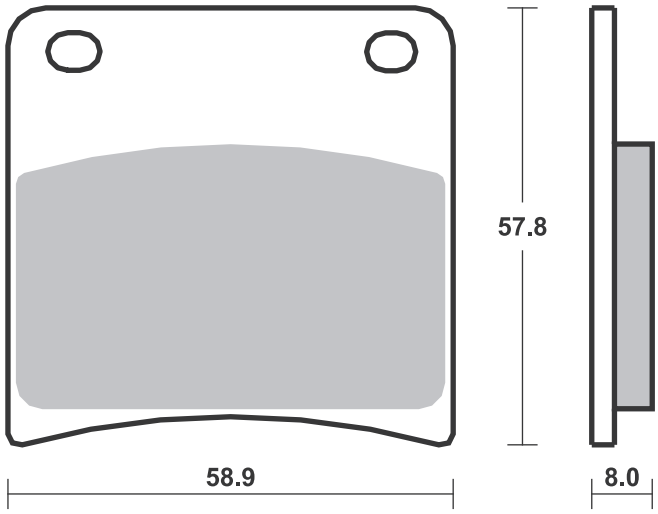

Dimensions in mm / Dimensions en mm • 1” = 25.4 mm , 1 mm = 0.04”

SBS 621 Recommended compound

KTM					
EXC	125		90-90	**HF**	**HF**
GS	125		88-88	**HF**	**HF**
MX	125		88-88	**HF**	**HF**
	250	GS,EXC, Enduro Models	91-91	**HF**	
EXC	250		90-90	**HF**	**HF**
GS	250		88-88	**HF**	**HF**
MX	250		88-88	**HF**	**HF**
EXC	300		90-90	**HF**	**HF**
EXC	350		88-90	**HF**	**HF**
GS	350		88-92	**HF**	**HF**
MX	350		88-88	**HF**	**HF**
MX	500		88-88	**HF**	**HF**
EXC	600		88-88	**HF**	**HF**
MX	600		88-89	**HF**	**HF**
MAICO					
		all models	89-89	**HF**	**HF**
		all models	91-91	**HF**	
GP	250	all models	89-89	**HF**	**HF**
	350		93-95	**HF**	**HF**
GP	400	all models	89-89	**HF**	**HF**
	500		93-94	**HF**	**HF**
GP	500	all models	89-89	**HF**	**HF**

SBS 622 Recommended compound

HONDA					
RS	250	R	91-92	**DC**	
RVF	400	RR (NC35)	90-96	**HF**	
VFR	750	R	88-93	**HS**	
CBR	900	RR Fireblade	92-97	**HS**	
	919		02-02	**HS**	
CB	1000	F (Big One)	93-97	**HS**	
VTR	1000	Super Hawk	97-07	**HS**	

Available compounds **HF** **SBS 621**

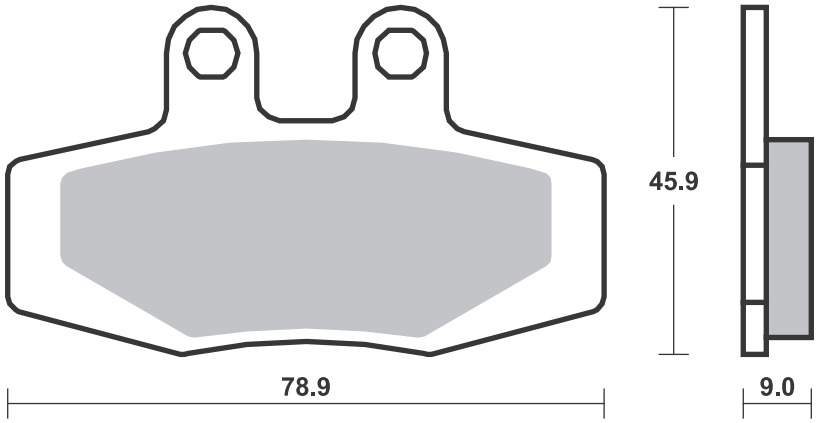

Available compounds **HF • HS • DC • RST • DCC** **SBS 622**

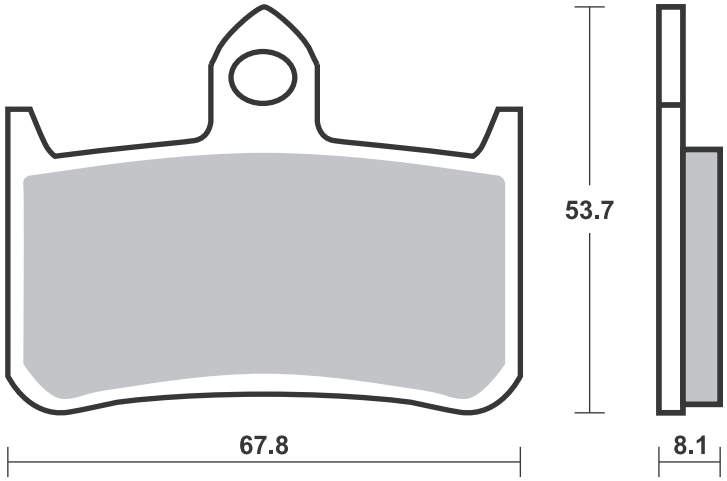

SBS 623 Recommended compound

HONDA				
RVF	400	RR (NC35)	90-96	**HF**
VFR	750	R	88-93	**LS**

SBS 624 Recommended compound

MZ				
	1000	(MUZ) S	03-10	**HS**
	1000	(MUZ) SF	05-10	**HS**
	1000	(MUZ) SFX	07-07	**HS**
	1000	(MUZ) SN	05-05	**HS**
	1000	(MUZ) ST	07-10	**HS**
NISSIN				
4 Piston Caliper				
SUZUKI				
GSX-R	600		92-93	**HS**
GSX-R	750		88-93	**HS**
GSX	1100	Katana	93-93	**HS**
GSX-R	1100		89-92	**HS**
GSF	1200	Bandit	95-96	**HS**
TRIUMPH				
	600	Daytona	03-04	**HS**
	600	Speed Four	03-06	**HS**
TT	600		00-03	**HS**
	650	Daytona	05-06	**HS**
	750	Daytona	91-92	**HS**
	900	Daytona	91-94	**HS**
	900	Daytona	94-98	**HS**
	900	Speed Triple	94-96	**HS**
	900	Sprint	94-98	**HS**
	900	Trophy	96-03	**HS**
T509	900	Speed Triple	97-01	**HS**
T595	950	Daytona	96-98	**HS**

TRIUMPH				
	955	Daytona Centennial	02-04	**HS**
	955	Daytona from VIN 132513	99-01	**HS**
	955	Daytona to VIN 132512	99-06	**HS**
	955	Speed Triple	99-06	**HS**
	955	Sprint RS	00-05	**HS**
	955	Sprint ST	99-04	**HS**
	1000	Daytona	92-92	**HS**
	1050	Sprint GT ABS	10-15	**HS**
	1050	Sprint GT SE ABS	10-15	**HS**
	1050	Sprint ST	05-11	**HS**
	1200	Daytona	91-97	**HS**
	1200	Tiger Explorer	12-15	**SP**
	1200	Trophy	96-03	**HS**
	1600	Thunderbird	09-18	**HS**
	1700	Thunderbird Commander	14-18	**HS**
	1700	Thunderbird LT	14-18	**HS**
	1700	Thunderbird Nightstorm	14-18	**HS**
	1700	Thunderbird Storm	11-18	**HS**
	2300	Rocket III	04-13	**HS**
	2300	Rocket III Classic	07-13	**HS**

TRIUMPH				
	2300	Rocket III Roadster	10-18	**HS**
	2300	Rocket III Touring	13-14	**HS**
	2300	Rocket X	15-15	**HS**
YAMAHA				
TZ	125		97-00	**DC**
TZ	250		90-05	**DC**
FZR	750	R	89-92	**HS**

Available compounds **HF • LS • RQ** **SBS 623**

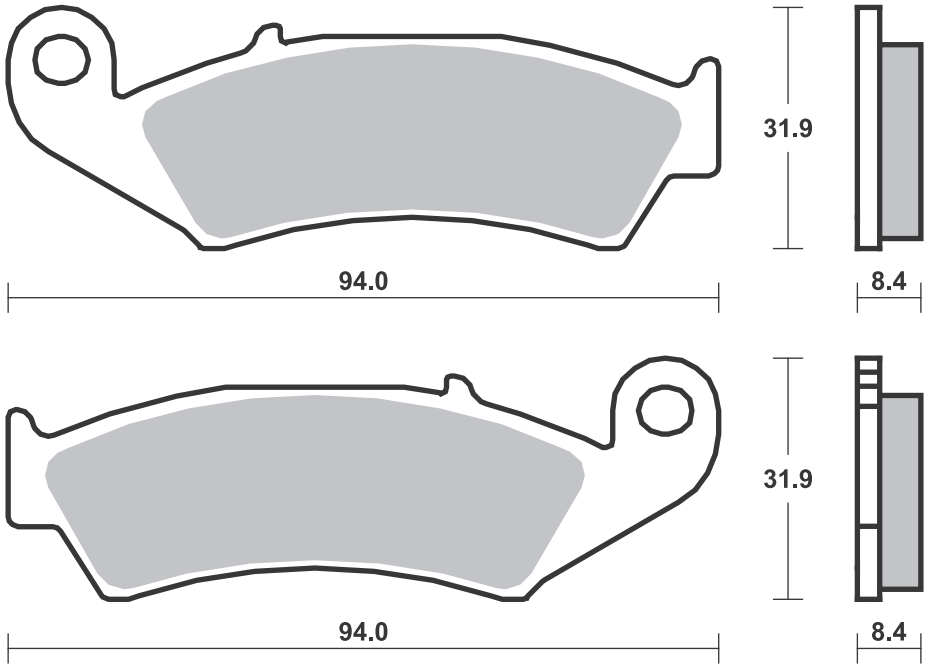

Available compounds **HF • HS • SP • DC • RST • DCC** **SBS 624**

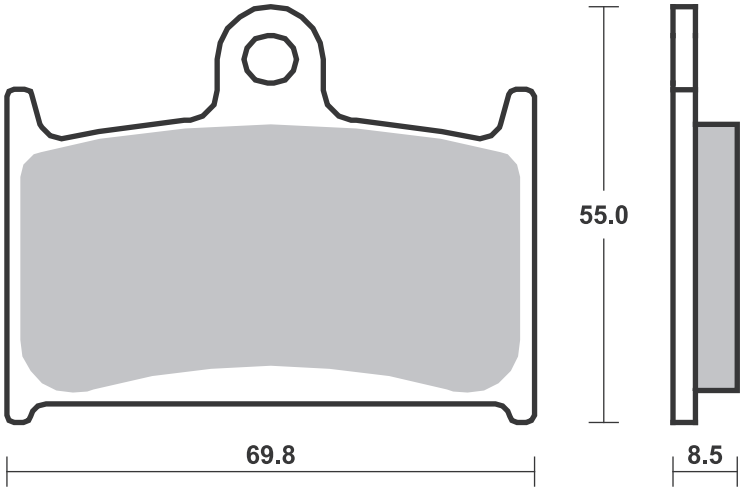

SBS 626 Recommended compound

SUZUKI				
DR	650	90-95	**HS**	
DR	650 R	92-92	**HS**	

Available compounds **HF • HS** **SBS 626**

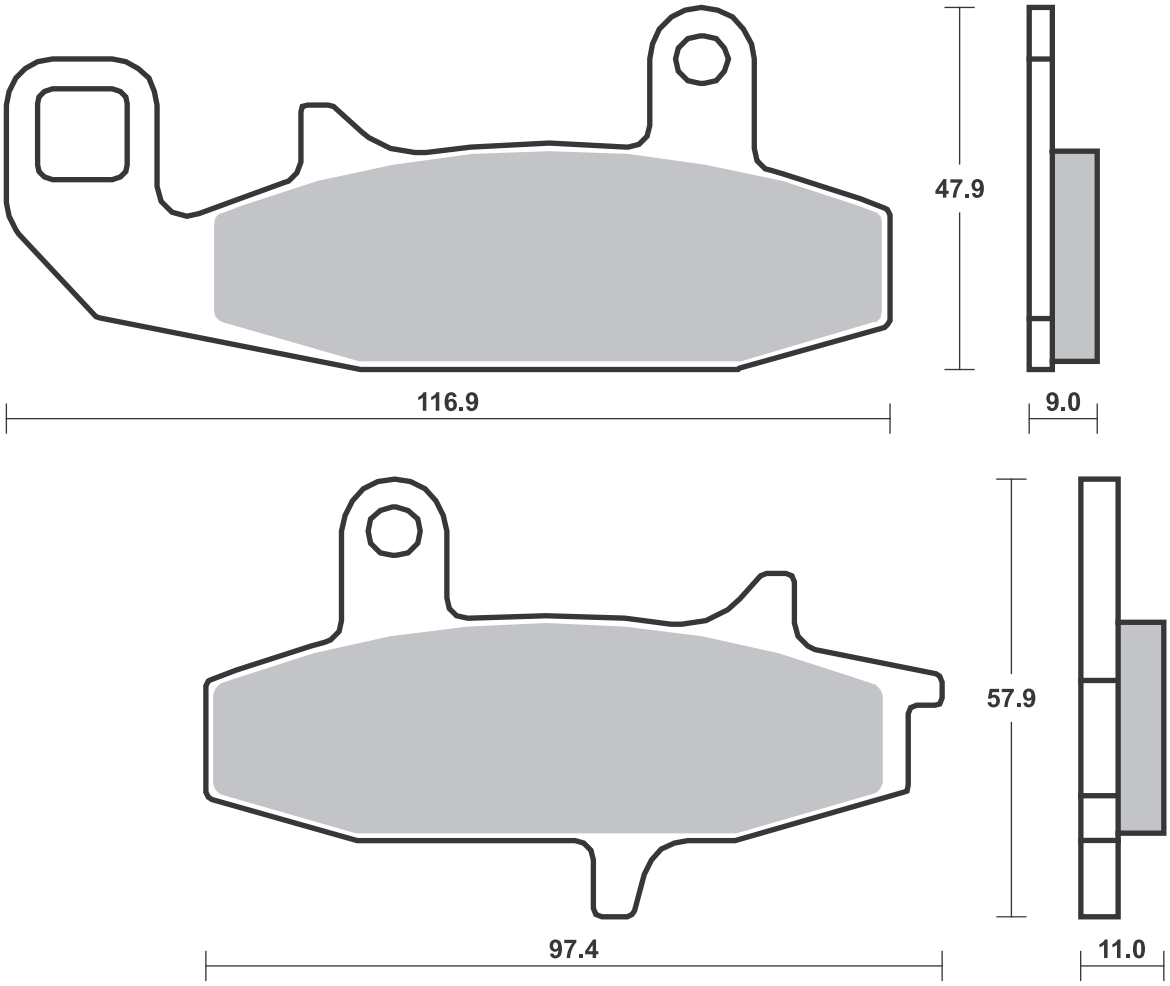

Dimensions in mm / Dimensions en mm • 1” = 25.4 mm , 1 mm = 0.04”

SBS 627 Recommended compound

BUELL					
	500	Blast	01-09	**HF**	
CAGIVA					
	900	Gran Canyon	99-04	**HS**	
	1000	Navigator, T	00-05	**HS**	
HONDA					
RS	125	R	91-94	**HF**	
CBR	250	R (Nissin cal)	11-13	**HS**	
CB-1	400	(CB 400 F)	89-90	**HS**	
CB	599		04-04	**HS**	
CBR	600	F	11-13	**HS**	
CBR	600	F3	95-98	**HS**	
VT	600	C, Shadow	94-00	**HS**	
VT	600	CD Shadow VLX	94-00	**HS**	
CB	650	F	14-19	**HS**	
CBR	650	F	14-20	**HS**	
FMX	650		05-08	**HS**	
NT	650	Hawk GT	88-91	**HS**	
NC	700	S	12-13	**HS**	
NC	700	X	12-13	**HS**	
VFR	700	F Interceptor	88-89	**HS**	
CB	750	N, F, Seven Fifty	92-95	**HS**	
CB	750	Nighthawk	91-02	**HS**	
VFR	750	F	88-98	**HS**	
PC	800	Pacific Coast	89-97	**HS**	
CBR	1000	F	89-92	**HS**	
ST	1100	ABS-TCS	92-95	**HS**	
VT	1100	C Shadow	94-96	**HS**	
VT	1100	C2 Shadow A.C.E.	95-04	**HS**	
VT	1100	C2 Shadow Sabre	00-05	**HS**	
VT	1100	C3 Shadow Aero	98-04	**HS**	
VT	1100	T Shadow	98-04	**HS**	
VT	1300	CX A Fury	10-18	**HS**	
VT	1300	Interstate	11-15	**HS**	
VT	1300	Sabre	11-13	**HS**	
VT	1300	Stateline	11-16	**HS**	
VTX	1300	C	04-09	**HS**	
VTX	1300	S	03-07	**HS**	
GL	1500	Valkyrie	96-03	**HS**	
HYOSUNG					
	125	V2	99-11	**HF**	
	250	Aquila	00-09	**HF**	
KAWASAKI					
KLE	300	Versys-X	17-20	**HS**	
EX	650	Ninja KRT ABS	17-20	**HS**	
EX	650	Ninja Performance ABS	17-20	**HS**	
EX	650	Ninja Tourer ABS	17-20	**HS**	
KLE	650	Versys	15-19	**HS**	
KLE	650	Versys LT	15-16	**HS**	
Z	650	ABS	17-19	**HS**	
Z	750	, ABS	07-12	**HS**	
Z	800	e	13-16	**HS**	
KYMCO					
	250	Venox	01-14	**HF**	**HF**

SUZUKI					
DL	250	V-Strom	17-19	**HF**	
GW	250	Inazuma	12-19	**HS**	
GW	250	Inazuma F	15-19	**HS**	
GSF	600	Bandit	95-99	**HS**	
RF	600	R	93-96	**HS**	
C	1500	T Intruder	13-18	**HS**	
C90	1500	Boulevard B.O.S.S.	13-18	**HS**	
SWM					
	440	Gran Milano	15-17	**HS**	
	440	Gran Turismo	15-17	**HS**	
	440	Silver Vase	15-17	**HS**	
TRIUMPH					
	660	Street Triple S A2	17-20	**HS**	
	675	Street Triple	08-17	**HS**	
	765	Street Triple S	17-20	**HS**	
	800	America	03-06	**HS**	
	800	Bonneville	01-04	**HS**	
	800	Bonneville America	02-06	**HS**	
	800	Bonneville T100 Centennial Edition	02-04	**HS**	
	800	Bonneville T100 Paul Smith	06-08	**HS**	
	800	Speedmaster	03-04	**HS**	
	800	Tiger	11-14	**HS**	
	800	Tiger XC	11-17	**HS**	
	800	Tiger XC ABS	12-14	**HS**	
	800	Tiger XCA	15-17	**HS**	
	800	Tiger XCR	15-17	**HS**	
	800	Tiger XR	15-18	**HS**	
	800	Tiger XRT	15-17	**HS**	
	800	Tiger XRX	15-17	**HS**	
	900	Adventurer	96-02	**HS**	
	900	America	07-16	**HS**	
	900	Bonneville	05-11	**HS**	
	900	Bonneville Newchurch	15-15	**HS**	
	900	Bonneville SE	09-13	**HS**	
	900	Bonneville Spirit	15-15	**HS**	
	900	Bonneville Street Cup	17-18	**HS**	
	900	Bonneville T100	05-20	**HS**	
	900	Bonneville T100 Black	16-20	**HS**	
	900	Bonneville T214	15-15	**HS**	
	900	Legend TT	99-01	**HS**	
	900	Scrambler	06-16	**HS**	
	900	Speedmaster	05-15	**HS**	
	900	Street Cup	17-20	**HS**	
	900	Street Scrambler	17-18	**HS**	
	900	Street Twin	16-18	**HS**	
	900	T100 Bud Ekins	20-20	**HS**	
	900	Thruxton	04-05	**HS**	
	900	Thruxton Ace	15-15	**HS**	
	900	Thunderbird	96-05	**HS**	

TRIUMPH					
	900	Thunderbird Sport	03-04	**HS**	
	900	Tiger	99-00	**HS**	
	955	Tiger	01-06	**HS**	**LS**
	955	Tiger	04-06	**HS**	
	1200	Bonneville Bobber	17-20	**HS**	
	1200	Bonneville T120	16-20	**HS**	
	1200	Bonneville T120 Ace	19-20	**HS**	
	1200	Bonneville T120 Black	16-20	**HS**	
	1200	Bonneville T120 Diamond Ed.	19-20	**HS**	
	1200	T120 Bud Ekins	20-20	**HS**	
	1200	Thruxton	16-19	**HS**	
YAMAHA					
WR	125	R, XY	09-16	**HF**	
WR	250	X	08-16	**HS**	

Available compounds **HF • HS • LS • SP • DC • RST • DCC** **SBS 627**

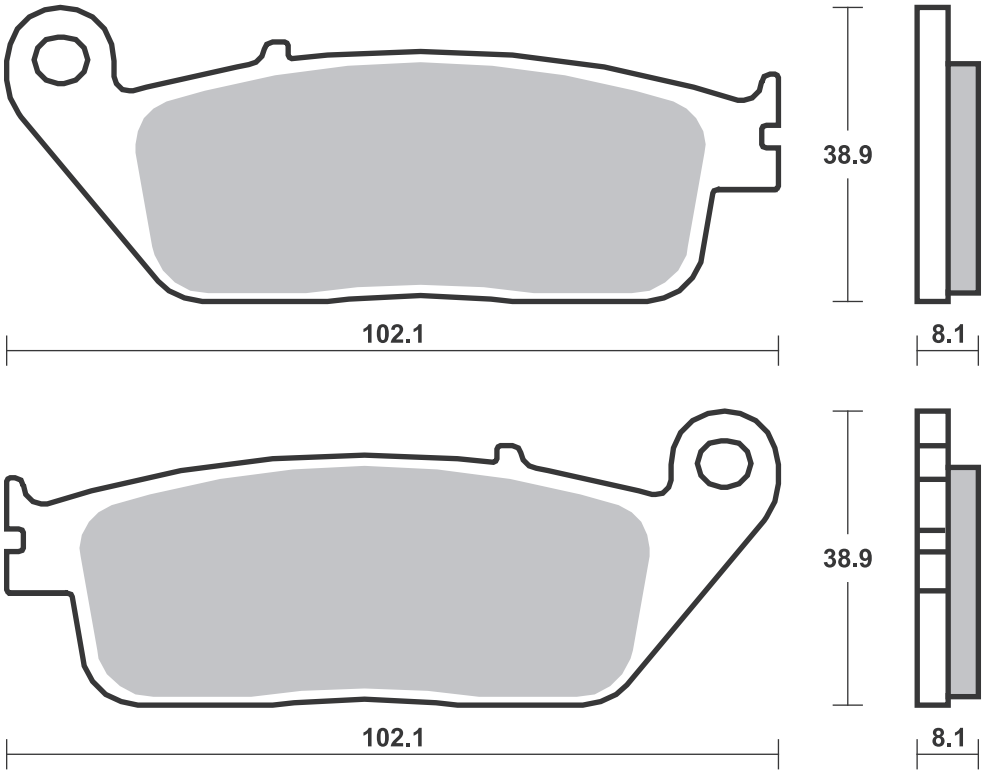

Dimensions in mm / Dimensions en mm • 1” = 25.4 mm , 1 mm = 0.04”

SBS 630 Recommended compound

HONDA					
DN-01	680		08-11		**LS**
VF	750	C, CD Magna	94-98	**HS**	
VFR	750	F	88-98		**LS**
CBR	1000	F	89-92		**LS**
CTX	1300		14-18		**LS**
GL	1500	Valkyrie	96-03		**LS**
INDIAN					
	1800	Challenger	20-20		**H.LS**
	1800	Challenger Dark Horse	20-20		**H.LS**
	1800	Challenger Limited	20-20		**H.LS**
	1800	Chief	15-18		**H.LS**
	1800	Chief Classic	14-18		**H.LS**
	1800	Chief Dark Horse	15-19		**H.LS**
	1800	Chief Vintage	14-19		**H.LS**
	1800	Chieftain	14-18		**H.LS**
	1800	Chieftain Classic	15-18		**H.LS**
	1800	Chieftain Dark Horse	15-18		**H.LS**
	1800	Chieftain Limited	15-18		**H.LS**
	1800	Dark Horse	16-18		**H.LS**
	1800	Roadmaster	15-19		**H.LS**
	1800	Roadmaster Classic	15-18		**H.LS**

INDIAN					
	1800	Roadmaster Elite	15-18		**H.LS**
	1800	Springfield	16-19		**H.LS**
	1800	Springfield Dark Horse	15-20		**H.LS**
TRIUMPH					
	900	Adventurer	96-02		**LS**
	900	Legend TT	99-01		**LS**
	900	Thunderbird	96-05		**LS**
	900	Thunderbird Sport	03-04		**LS**
	900	Tiger	99-00		**LS**
VICTORY					
	1634	Hammer	08-08		**H.LS**
	1634	Kingpin all models	08-12		**H.LS**
	1634	Vegas	08-17		**H.LS**
	1634	Vegas 8-Ball	08-17		**H.LS**
	1634	Vegas Jackpot	08-08		**H.LS**
	1731	Boardwalk	13-15		**H.LS**
	1731	Cross Country	10-17		**H.LS**
	1731	Cross Country 8-Ball	14-16		**H.LS**
	1731	Cross Country Tour	12-17		**H.LS**
	1731	Cross Roads	10-12		**H.LS**
	1731	Cross Roads 8-Ball	14-14		**H.LS**

VICTORY					
	1731	Cross Roads Classic	14-14		**H.LS**
	1731	Gunner	15-17		**H.LS**
	1731	Hammer	09-11		**H.LS**
	1731	Hammer 8-Ball	10-16		**H.LS**
	1731	Hammer S	09-17		**H.LS**
	1731	Hard-Ball	12-13		**H.LS**
	1731	High-Ball	12-17		**H.LS**
	1731	Jackpot	10-16		**H.LS**
	1731	Judge	13-17		**H.LS**
	1731	Kingpin	10-12		**H.LS**
	1731	Kingpin 8-Ball	10-11		**H.LS**
	1731	Magnum	15-17		**H.LS**
	1731	Magnum X-1	15-17		**H.LS**
	1731	Vegas	10-17		**H.LS**
	1731	Vegas 8-Ball	10-17		**H.LS**
	1731	Vegas Jackpot	09-09		**H.LS**
	1731	Vision all models	08-17		**H.LS**

SBS 631 Recommended compound

BERINGER					
4 Piston Caliper					
HUSABERG					
FS	400	e, c	01-03	**RSI**	
FS	450	e, c	03-05	**RSI**	
FS	650	e, c	01-05	**RSI**	
KAWASAKI					
ZR	400	Zephyr	97-01	**HS**	
	600	R, Ninja	89-96	**HF**	
ZX	600	Ninja	90-93	**HS**	
ZX-6R	600	(Ninja ZX6)	93-97	**HS**	
ZX-6R	600	(Ninja ZX6R)	95-97	**HS**	
ZX-6R	600	(ZX6)	90-93	**HS**	
ZX-7R	750	Ninja	89-95	**HS**	
ZX-9R	900	Ninja	94-95	**HS**	
KLE	1000	Versys	12-18	**SP**	
KLE	1000	Versys ABS	15-18	**SP**	
KLE	1000	Versys LT	15-16	**SP**	
ZR	1100	Zephyr	92-95	**HS**	
ZX	1100		93-97	**HS**	
ZZR	1100		90-01	**HS**	
ZZR	1200		02-04	**HS**	
VN	1700	Vulcan Voyager	09-16	**HS**	
VN	2000	Vulcan	04-10	**HS**	
MOTO-MASTER					
Supermoto Racing Caliper					

SUZUKI					
GSF	400	Bandit	93-97	**HS**	
GSR	600		06-10	**HS**	
GSX-R	600		97-03	**HS**	
GSF	650	Bandit	07-11	**HS**	
GSF	650	Bandit ABS	07-12	**HS**	
GSF	650	S Bandit	07-11	**HS**	
GSF	650	S Bandit ABS	07-13	**HS**	
GSX	650	F	08-18	**HS**	
SV	650		19-20	**HS**	
SV	650	X	19-20	**HS**	
GSX-R	750		00-03	**HS**	
SV	1000	, S	03-07	**HS**	
TL	1000	S V-Twin	97-01	**HS**	
GSF	1200	Bandit	06-06	**HS**	
GSF	1200	S Bandit	06-06	**HS**	
GSF	1250	A Bandit	07-18	**HS**	
GSF	1250	Bandit	06-18	**HS**	
GSF	1250	F Bandit	12-18	**HS**	
GSF	1250	S Bandit	06-18	**HS**	
GSF	1250	SA Bandit	07-18	**HS**	
GSX	1250	FA Bandit	16-18	**HS**	
GSX	1250	FA Traveller	15-16	**HS**	

Available compounds **HF • HS • LS • H.HF • H.CT • H.LS** **SBS 630**

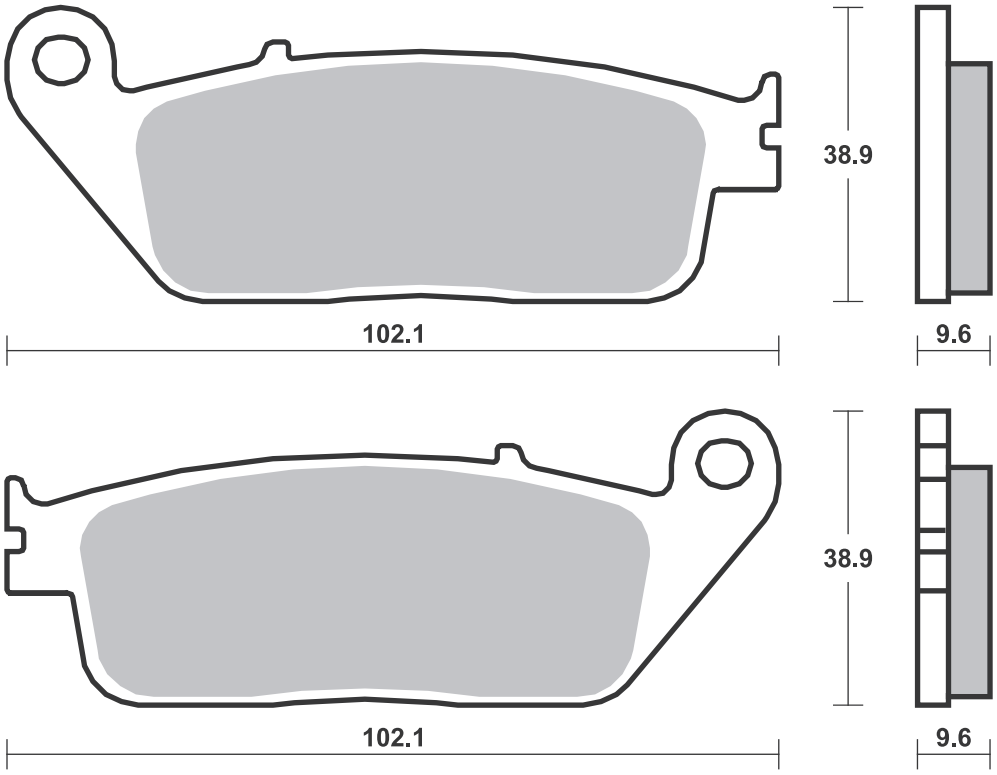

Available compounds **HF • HS • SP • DC • RST • DCC • DS-1 • RSI** **SBS 631**

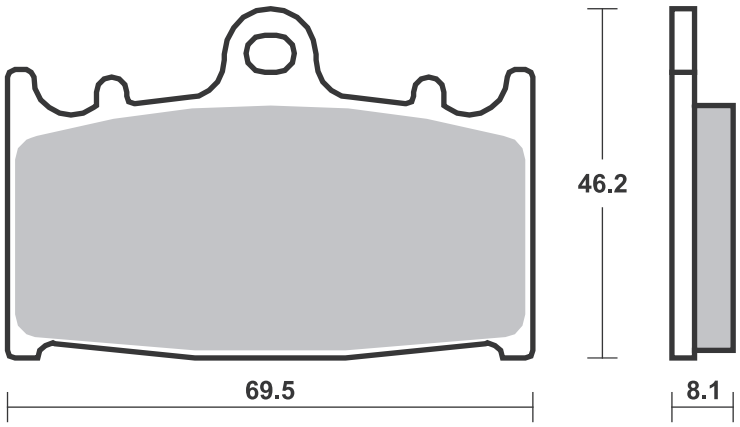

SBS 632 Recommended compound

CANNONDALE			
MX	400	00-03	**RSI**
C	440 R	03-03	**RSI**
E	440 , A, R	03-03	**RSI**
S	440	03-03	**HF**
X	440	03-03	**RSI**
KAWASAKI			
KX	125	89-94	**RSI**
KDX	200	93-99	**SI**
KDX	200 SR	89-92	**SI**
KDX	220 R	97-05	**SI**
KDX	250 SR	91-94	**SI**
KLX	250	93-96	**SI**
KX	250	89-94	**RSI**
KX	500	89-95	**RSI**
KLX	650	93-96	**SI**
KLX	650 R	93-95	**SI**
SUZUKI			
RM	125	89-90	**RSI**
TS	125	89-96	**HF**
DR	250	90-95	**HF**
RM	250	89-90	**RSI**
YAMAHA			
WR	125	91-97	**SI**
YZ	125	90-95	**RSI**
WR	200	91-92	**SI**
FZ25	250	19-19	**HF**
TT	250	93-03	**SI**

YAMAHA			
WR	250	90-97	**SI**
XG	250 Tricker	05-11	**HF**
XT	250	08-08	**HF**
YZ	250 A	90-90	**RSI**
YZ	250 WRA,WRB	90-91	**RSI**
TT	350	95-00	**SI**
WR	500 ZD,ZE	92-93	**SI**

SBS 633 Recommended compound

TRIUMPH			
	750 Daytona	91-92	**LS**
	900 Daytona	91-94	**LS**
	900 Daytona Super III	94-98	**LS**
	900 Trophy	96-03	**LS**
	1000 Daytona	92-92	**LS**
	1200 Daytona	91-97	**LS**
	1200 Trophy	96-03	**LS**

Available compounds **HF • SI • RSI** **SBS 632**

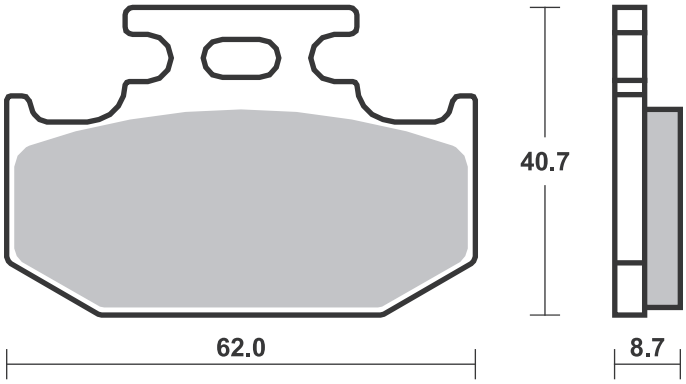

Available compounds **HF • LS • SI • RSI** **SBS 633**

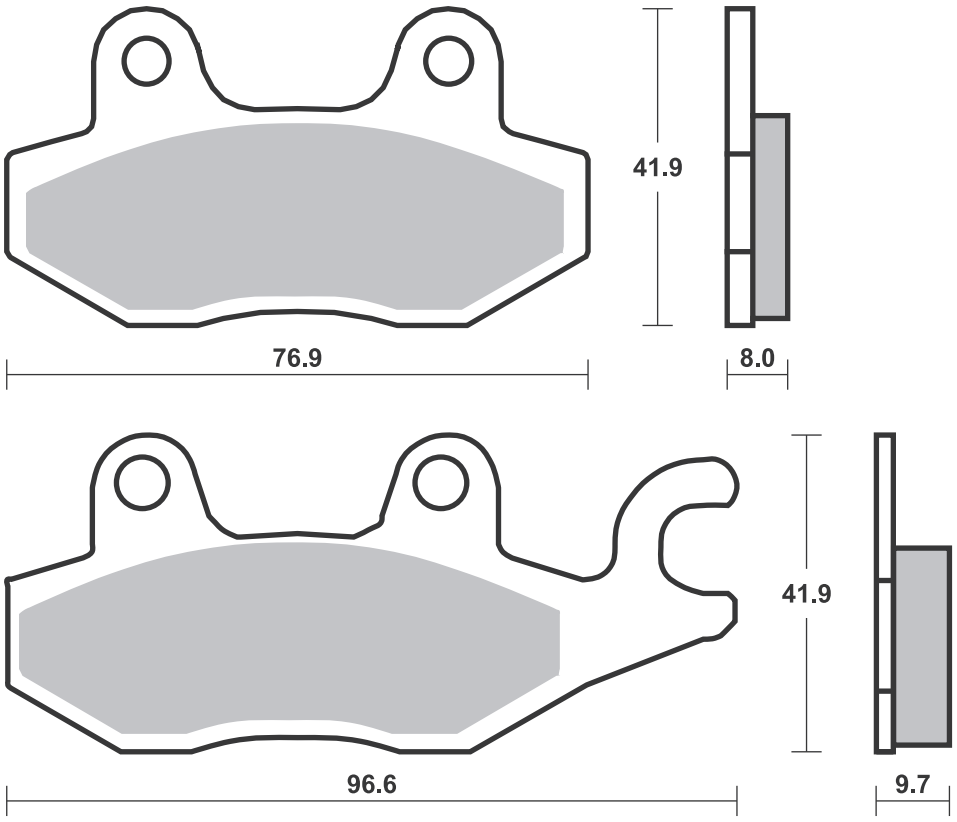

Dimensions in mm / Dimensions en mm • 1” = 25.4 mm , 1 mm = 0.04”

SBS 634 Recommended compound

YAMAHA				
FZ6	600	Fazer S2	07-09	**HS**
FZ6	600	Fazer S2 ABS	07-09	**HS**
FZ6	600	S2	07-09	**HS**
FZ6	600	S2 ABS	07-09	**HS**
FZS	600	Fazer	98-03	**HS**
FZS	600	S Fazer	01-03	**HS**
YZF	600	R Thunder Cat	96-03	**HS**
YZF	600	R6	99-16	**HS**
FZ-07	700		14-17	**HS**
MT-07	700		14-18	**HS**
MT-07	700	Moto Cage	15-17	**HS**
MT-07	700	SP	18-18	**HS**
MT-07	700	Tracer	16-20	**HS**
MT-07	700	Tracer GT	19-19	**HS**
XSR	700		16-20	**HS**
XSR	700	XTribute	19-20	**HS**
YZF	750	R7 OW02	99-02	**HS**
	800	Fazer 8	10-15	**HS**
FZ8	800		10-14	**HS**
FJ-09	850		15-17	**HS**
FZ-09	850		14-17	**HS**
MT-09	850		18-18	**HS**
MXT	850	Niken	18-18	**HS**
MXT	850	Niken GT	19-20	**HS**
MT-09	900		14-20	**HS**
MT-09	900	SP	18-20	**HS**
MT-09	900	Sport Tracker	15-16	**HS**
MT-09	900	Street Rally	14-16	**HS**

YAMAHA				
MT-09	900	Tracer	15-20	**HS**
MT-09	900	Tracer GT	18-20	**HS**
XSR	900		16-20	**HS**
XSR	900	Abarth	17-18	**HS**
FZ1	1000	Fazer	06-16	**HS**
FZ-10	1000		16-17	**HS**
FZS	1000	Fazer	01-05	**HS**
MT-10	1000		16-20	**HS**
MT-10	1000	SP	17-19	**HS**
YZF	1000	R Thunder Ace	96-99	**HS**
YZF	1000	R1	98-03	**HS**
YZF	1000	R1	15-21	**SP**
YZF	1000	R1 LE	06-06	**HS**
YZF	1000	R1M	15-21	**SP**
YZF	1000	R1S	16-16	**SP**
BT	1100	Bulldog	02-06	**HS**
XT	1200	Z Super Tenere	14-19	**SP**
XT	1200	ZE Super Tenere	14-19	**SP**
XT	1200	ZE Super Tenere Raid Ed.	18-19	**SP**
XTZ	1200	Super Tenere	10-13	**SP**
FJR	1300		01-03	**HS**
FJR	1300	ABS	03-05	**HS**
XJR	1300	Racer	15-19	**HS**
XJR	1300	SP	01-01	**HS**
XV	1700	PC Road Star Warrior	03-07	**HS**

YAMAHA				
XV	1700	Road Star S	08-14	**HS**
XV	1700	Road Star Silverado S	11-14	**HS**
XV	1700	Road Star Warrior	02-02	**HS**
XV	1900	Raider	08-14	**HS**
XV	1900	Raider Bullet Cowl	15-15	**HS**
XV	1900	Raider S	08-14	**HS**
XV	1900	Raider SCL	12-14	**HS**
XV	1900	Roadliner	06-14	**HS**
XV	1900	Roadliner S	06-14	**HS**
XV	1900	Stratoliner	06-09	**HS**
XV	1900	Stratoliner Deluxe	11-14	**HS**
XV	1900	Stratoliner S	06-14	**HS**

SBS 635 Recommended compound

SUZUKI			
DR	650	90-95	**LS**
DR	650 R	92-92	**LS**

Available compounds **HF • HS • SP • DC • RST • DS-1 • DS-2** **SBS 634**

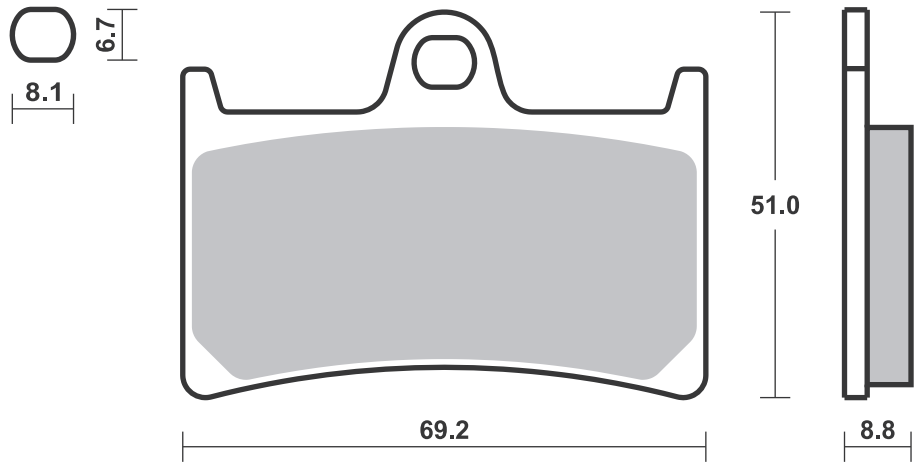

Available compounds **HF • LS** **SBS 635**

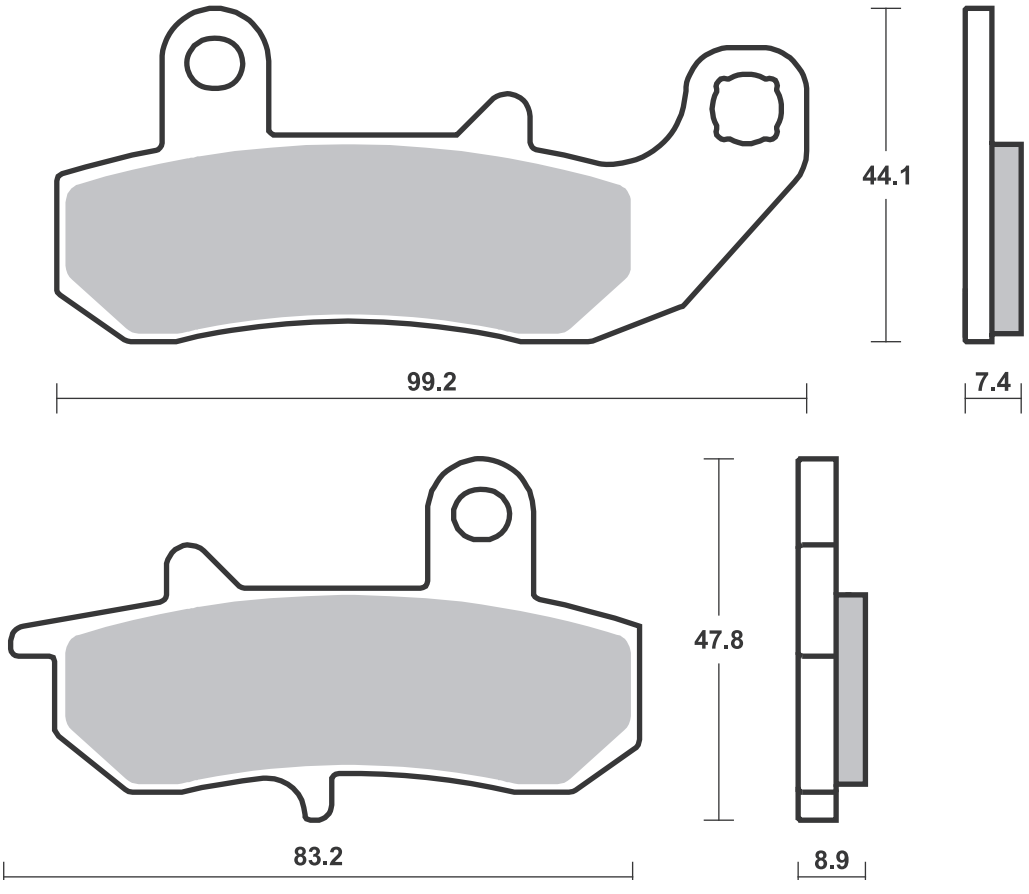

Dimensions in mm / Dimensions en mm • 1” = 25.4 mm , 1 mm = 0.04”

SBS 636 Recommended compound

BETA			
SR	125 34	89 - 89	**HF**
TR	125 34	92 - 92	**HF**
TR	125 36	92 - 92	**HF**
TRIAL	125	97 - 97	**HF**
	240 Super Trial	92 - 92	**HF**
ALP	240	92 - 92	**HF**
	250 Zero	91 - 91	**HF**
ALP	250	92 - 92	**HF**
	260 Synt	92 - 92	**HF**
	260 Zero	91 - 91	**HF**
TR	260 34,35,ZERO	89 - 92	**HF**

SBS 637 Recommended compound

YAMAHA			
YFS	200 U-P Blaster	88 - 02	**SI**

Available compounds **HF** **SBS 636**

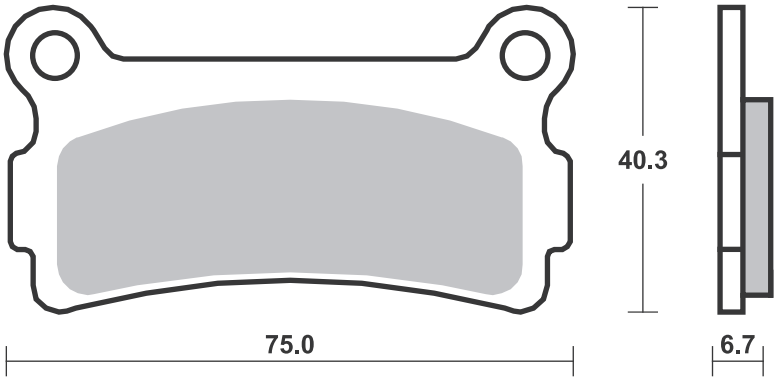

Available compounds **HF • SI • RSI** **SBS 637**

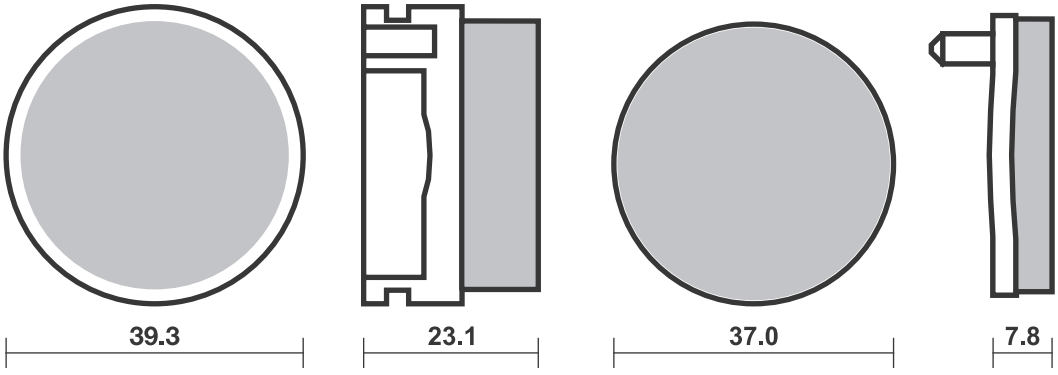

SBS 638 Recommended compound

ARCTIC CAT					
	50	DVX	06-08		**SI**
	90	DVX	06-14		**SI**
CAGIVA					
	900	Canyon I.E.	97-97		**LS**
	900	Gran Canyon	99-04		**LS**
	1000	Navigator, T	00-05		**LS**
CAN-AM					
	800	Commander	11-14	**SI**	
CF MOTO					
	550	U-Force	15-16	**SI**	
	550	Z-Force	15-16	**SI**	
	800	Z-Force EX	15-15	**SI**	
HISUN					
HS	400	UTV	15-17	**SI**	
HS	500	UTV	15-17	**SI**	
HS	700	UTV	15-17	**SI**	
HS	700	UTV Left (2 cal.rear)	15-17	**SI**	**SI**
HS	800	UTV (2 cal.rear)	15-17	**SI**	**SI**
HONDA					
CA	250	Rebel	90-95	**HF**	
HYOSUNG					
GV	250		17-18		**HF**
GV	300		16-17		**HF**
KAWASAKI					
	125	Ninja	19-19	**HF**	**HF**
Z	125		19-19	**HF**	**HF**

KAWASAKI					
EX	250	R Ninja	08-17	**HS**	**LS**
EX	250	SL Ninja	15-17	**HS**	**LS**
Z	250	SL	15-17	**HF**	**HF**
EX	300	R Ninja, ABS	13-17	**HS**	**LS**
KLE	300	Versys-X	17-20		**LS**
KLF	300	Bayou 4x4	89-05	**SI**	
Z	300		15-16	**HS**	**LS**
EX	400	Ninja	18-20		**LS**
EX	400	Ninja KRT	18-18	**HS**	**LS**
EX	400	Ninja SE	18-19		**LS**
KLF	400	Bayou	93-99	**SI**	
KLR	650		08-18		**LS**
KLR	650	Camo	08-18		**LS**
KVF	650	Brute Force 4x4i	05-11	**SI**	
KRF	750	Teryx 4x4	08-13	**SI**	
KVF	750	Brute Force 4x4i	05-15	**SI**	
	800	Mule Pro FX	15-17	**SI**	
KRF	800	Teryx BEF/CEF/DEF	14-17	**SI**	
KRT	800	Teryx 4 BEF/CEF/DEF	14-17	**SI**	
SUZUKI					
LT-F	300	King Quad	02-02	**SI**	
LT-R	450		06-12	**SI**	
LT-A	500	FY Quadmaster	00-08	**SI**	
LT-F	500	F	98-07	**SI**	
TRIUMPH					
	750	Trident	91-98	**HS**	
	900	Bonneville	05-08		**LS**

TRIUMPH					
	900	Daytona	94-98		**LS**
	900	Daytona, Sprint	93-93	**HS**	
	900	Speed Triple	94-96		**LS**
	900	Sprint	94-98		**LS**
	900	Tiger	93-98	**HS**	
	900	Trident	91-98	**HS**	
	900	Trophy	91-95	**HS**	
	955	Tiger	04-06		**LS**
	1000	Trophy	91-95	**HS**	
	1050	Tiger	07-13		**LS**
	1050	Tiger SE	09-13		**LS**
	1200	Trophy	91-95	**HS**	
YAMAHA					
YBR	250		07-11	**HF**	
YFZ	450	S	04-09	**SI**	
YXR	450	Rhino	06-09	**SI**	
	660	Rhino	05-08	**SI**	
YFM	700	R Raptor	06-08	**SI**	
YFM	700	Raptor	09-14	**SI**	
YXR	700	Rhino	08-14	**SI**	**SI**

SBS 640 Recommended compound

BMW					
K75	750		90-90	**HS**	
K75	750	RT	91-96	**HS**	
R80	800	R	93-94	**HS**	
K100	1000	LT ABS	89-89	**HS**	
K100	1000	RS ABS	88-89	**HS**	
R100	1000	RS	93-95	**HS**	

Available compounds **HF • HS • LS • DC • RST • DS-1 • RQ • SI • RSI** **SBS 638**

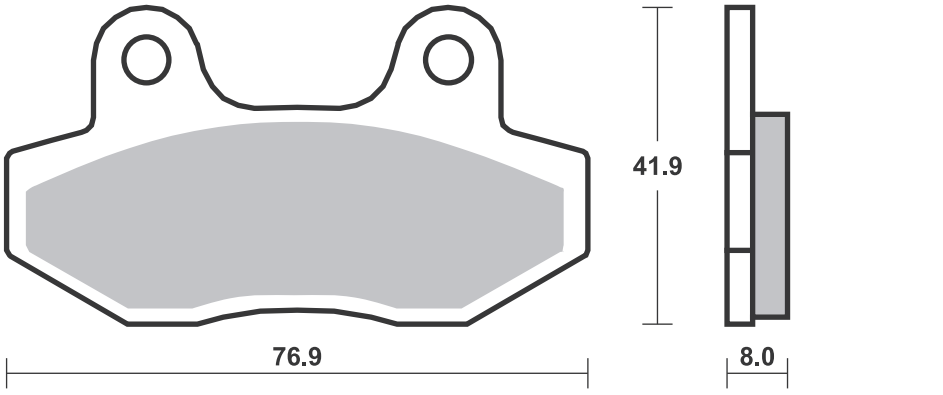

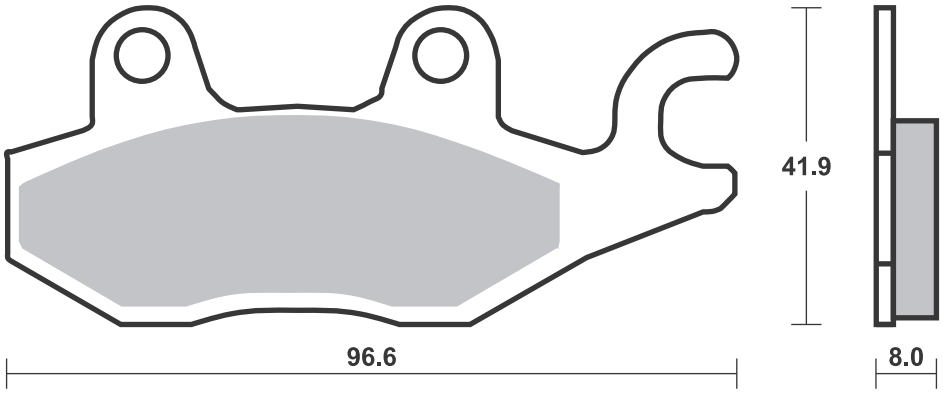

Available compounds **HF • HS** **SBS 640**

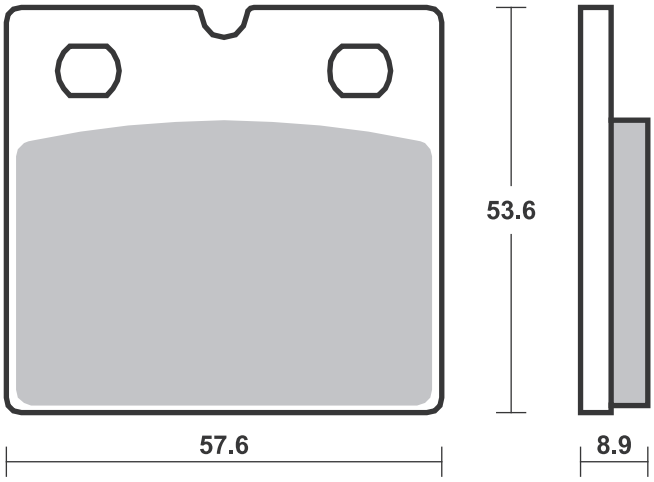

SBS 641 Recommended compound

MOTO-MORINI				
350	Dart	90-92	**HF**	
400	Dart	90-92	**HF**	

SBS 642 Recommended compound

POLARIS				
250	Trail Boss	88-90	**ATS**	
300	Sportsman			
	4x4	08-11	**ATS**	**ATS**
325	Xpedition	00-02	**ATS**	
330	E Trail Blazer	08-12	**ATS**	
450	Outlaw MXR	09-11		**ATS**
450	Outlaw S	08-08		**ATS**
500	E Scrambler			
	2x4, 4x4	08-11	**ATS**	
500	Revolver	06-06	**ATS**	**ATS**
500	Sportsman HO			
	(from			
	16.12.2008)	09-14	**ATS**	
500	Sportsman HO			
	(to 15.12.2008)	03-08	**ATS**	
525	Outlaw	07-13		**ATS**
525	Outlaw IRS	08-13		**ATS**

POLARIS				
525	Outlaw S	08-11		**ATS**
570	Ranger RZR			
	EFi	12-13		**ATS**
600	Sportsman	03-06	**ATS**	
700	Sportsman	02-09	**ATS**	
700	Sportsman			
	MV 700	05-06	**ATS**	
800	Ranger RZR			
	EFi	08-14		**ATS**
800	Ranger RZR			
	S EFi	09-15		**ATS**
800	RZR	08-15		**ATS**
800	Sportsman			
	(from			
	16.12.2008)	09-14	**ATS**	
800	Sportsman			
	(to 15.12.2008)	05-08	**ATS**	

SBS 643 Recommended compound

POLARIS				
250	Cyclone	87-87		**HF**
250	Trail Boss	88-90		**HF**

Available compounds **HF** **SBS 641**

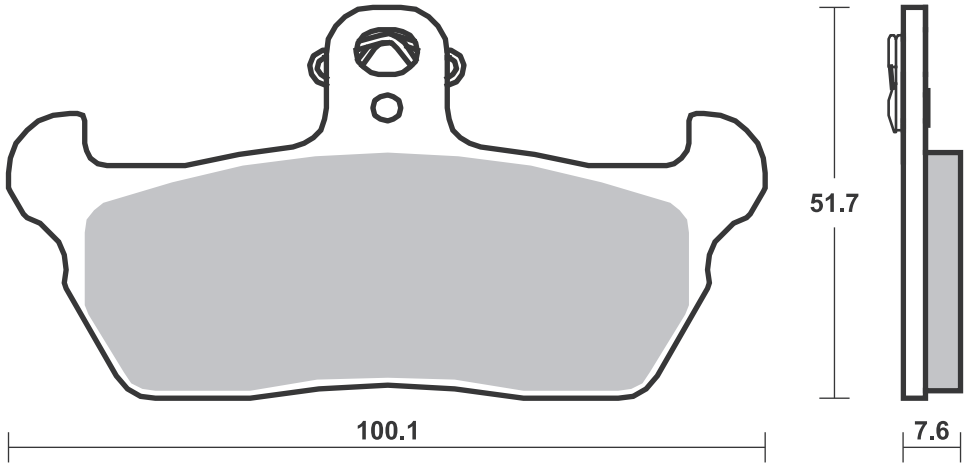

Available compounds **HF • SI • RSI • ATS** **SBS 642**

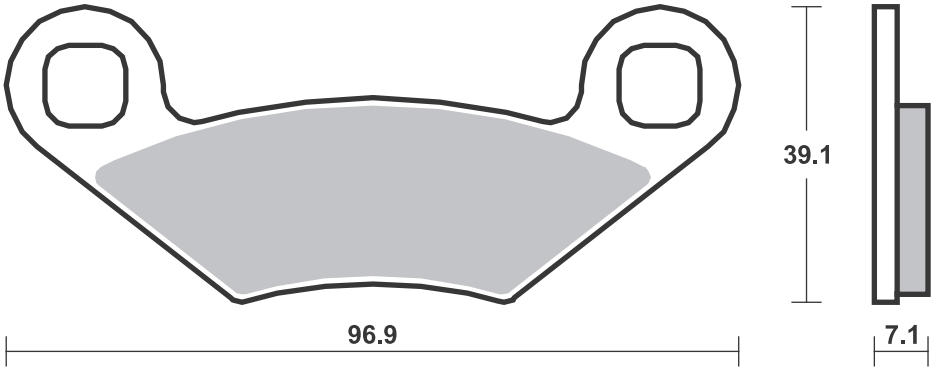

Available compounds **HF** **SBS 643**

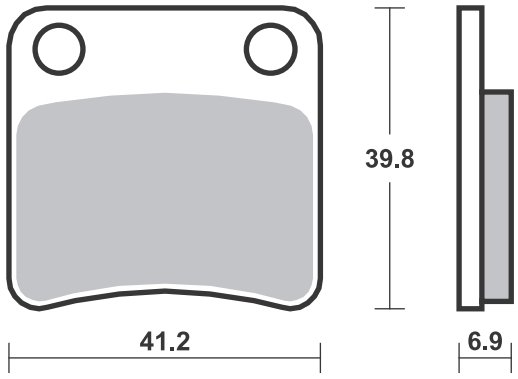

SBS 644 Recommended compound

BMW					
R80	800	R	91-95	**HS**	
K1	1000		89-89	**HS**	
K100	1000	LT	92-94	**HS**	
K100	1000	RS	90-92	**HS**	
R100	1000	R	91-95	**HS**	
R100	1000	R	92-95	**HS**	
K1100	1100	LT/SE	92-00	**HS**	
K1100	1100	RS	93-96	**HS**	
R1100	1100	RS	93-93	**HS**	

SBS 645 Recommended compound

YAMAHA					
FZR	600	R	90-91	**HS**	
YZF	600	R	94-96	**HS**	
TDM	850		96-01	**HS**	
FZR	1000	EX UP	90-91	**HS**	
V-MAX	1200		93-03	**HS**	

SBS 647 Recommended compound

CAGIVA					
	900	Canyon I.E.	97-97	**HS**	
HONDA					
VT	600	C, Shadow	88-93	**HS**	
NX	650	Dominator J-K	88-92	**HS**	
GL	1500	Gold Wing Aspencade, Interstate, SE	94-00	**HS**	
GL	1500	Gold Wing, Gold Wing SE	88-99	**HS**	

Available compounds **HF • HS** **SBS 644**

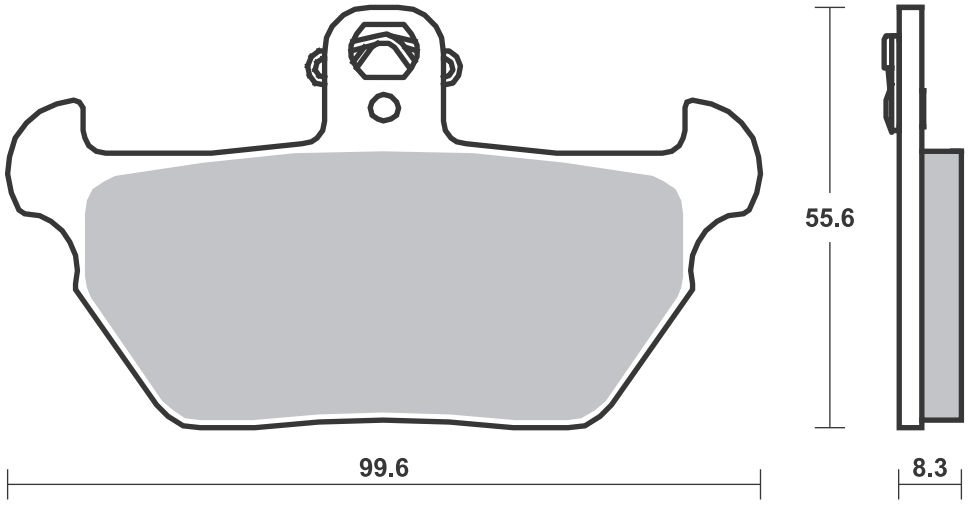

Available compounds **HF • HS • DCC** **SBS 645**

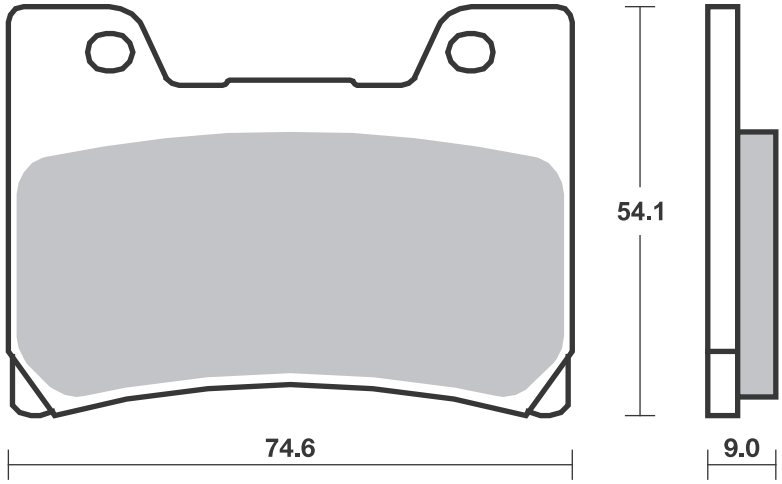

Available compounds **HF • HS** **SBS 647**

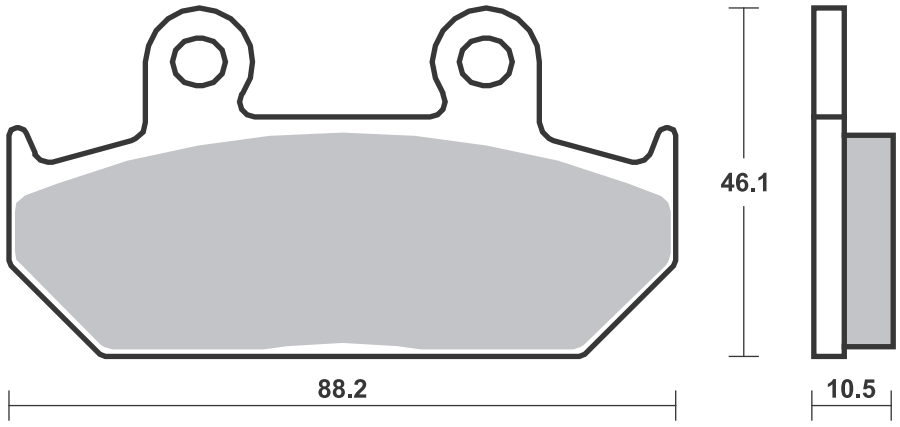

Dimensions in mm / Dimensions en mm • 1” = 25.4 mm , 1 mm = 0.04”

SBS 648 Recommended compound

SUZUKI			
RM	125	91 - 95	**RSI**
DR-Z	250	01 - 07	**SI**
RM	250	91 - 95	**RSI**
RMX	250	89 - 98	**RSI**
DR	350	90 - 99	**HF**
DR	350 V, W, X	97 - 99	**SI**
DR	650 SE T-W	96 - 99	**HF**
YAMAHA			
YZ	125	96 - 97	**RSI**
YZ	250 B1-J1	91 - 97	**RSI**
WR	400 F	98 - 98	**SI**
YZ	400	98 - 98	**RSI**

SBS 649 Recommended compound

ARCTIC CAT			
	400 DVX	04 - 08	**SI**
HYOSUNG			
TE	400	05 - 06	**SI**
TE	450	07 - 11	**SI**
KAWASAKI			
KFX	400	02 - 05	**SI**
SUZUKI			
LT	250	88 - 94	**SI**
LT-Z	400 Quad Sport	02 - 19	**SI**
LT-R	450	06 - 12	**SI**
LT	500	87 - 95	**SI**

Available compounds **HF • SI • RSI** **SBS 648**

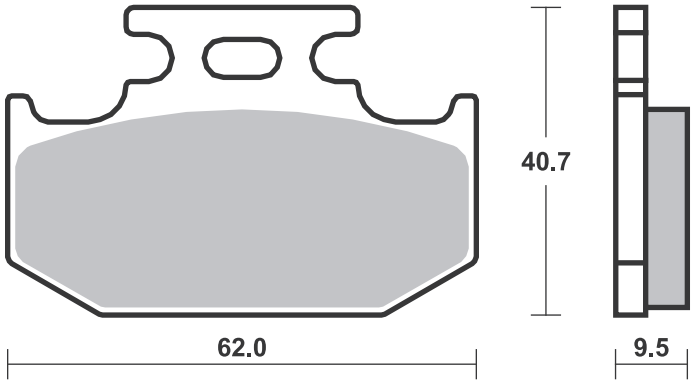

Available compounds **HF • SI • RSI** **SBS 649**

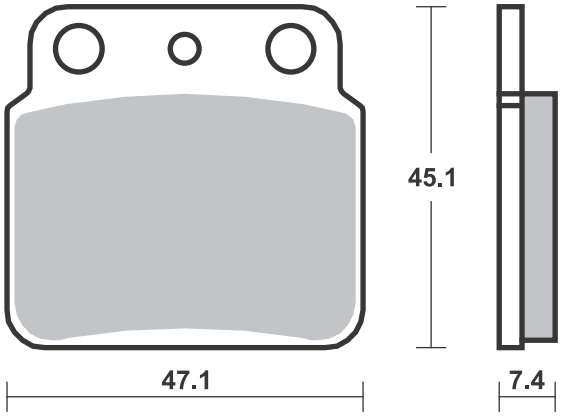

SBS 651 Recommended compound

APRILIA			
SX	125	08-13	**HF**
	650 Pegaso	92-94	**HF**

SBS 652 Recommended compound

ITALJET			
SM	125	02-05	**HF**

Available compounds **HF** **SBS 651**

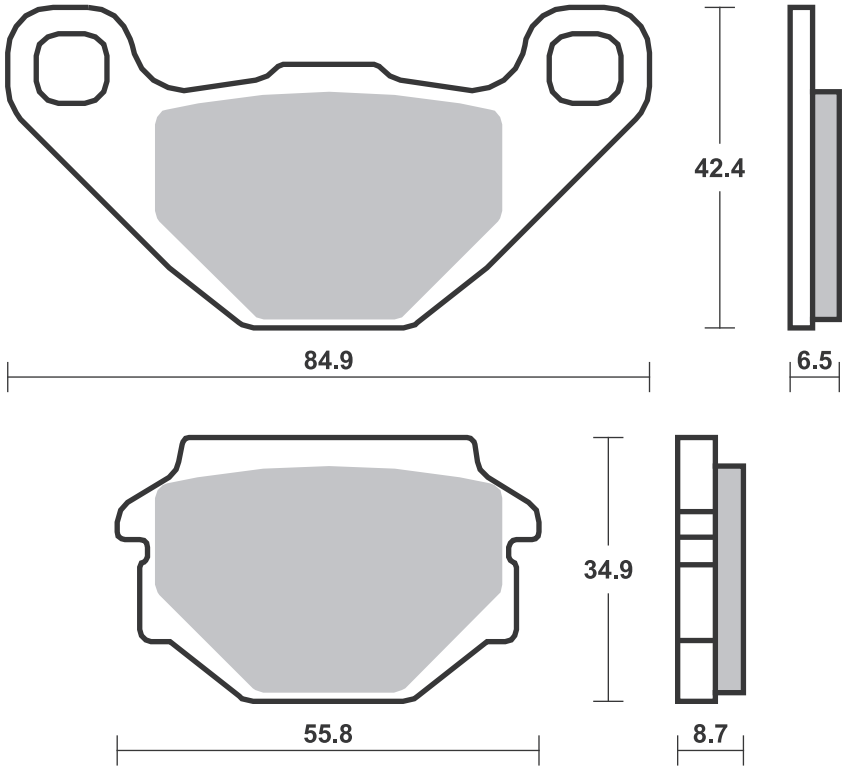

Available compounds **HF** **SBS 652**

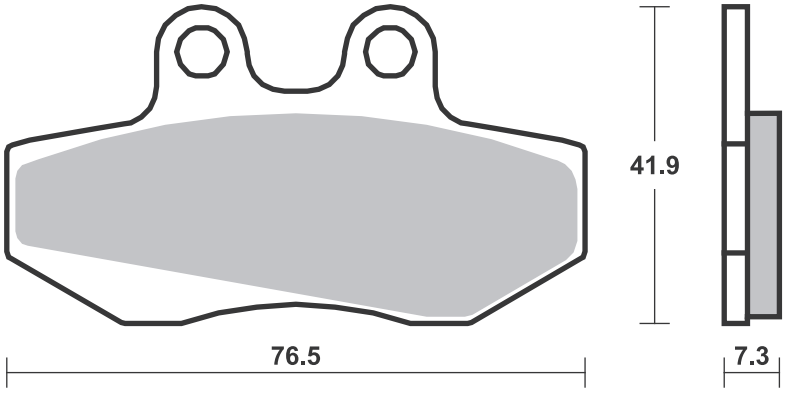

SBS 654 Recommended compound

HONDA				
VTR	250		98-02	**HF**
ST	1100	ABS-TCS	92-95	**LS**

SBS 655 Recommended compound

ISR CALIPERS
2 Piston (22-036)
4 Piston (22-043)
6 Piston Racing Caliper, small

Available compounds **HF • HS • LS** **SBS 654**

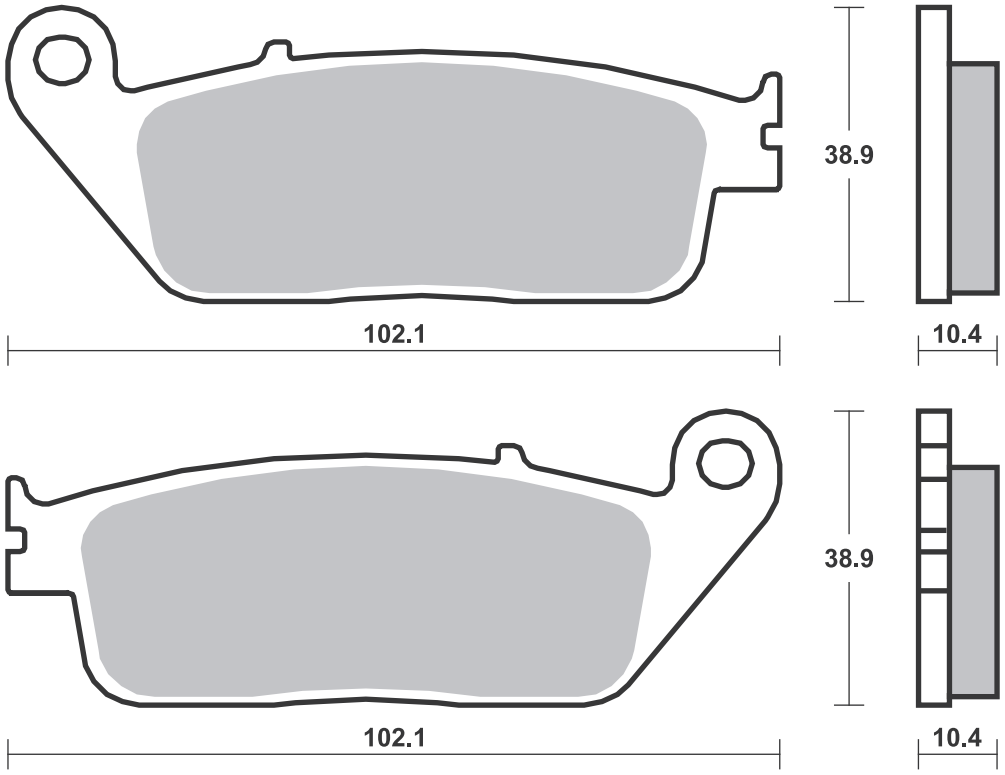

Available compounds **HF • DC** **SBS 655**

1 set = 6 pcs.

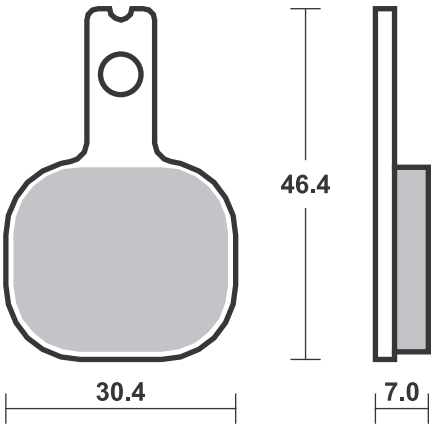

SBS 656 Recommended compound

HARRISON/BILLET CALIPERS	
Mini-6	
ISR CALIPERS	
6 Piston Racing Caliper, large	

SBS 657 Recommended compound

HONDA				
CB	599		04-04	**LS**
CB	600	Hornet ABS	07-12	**LS**
CBR	600	F ABS	11-13	**LS**
CBR	600	F, Super Sport	91-94	**LS**
CBR	600	F3	95-98	**LS**
CBR	600	F4, F4 Sport	99-06	**LS**
CBR	600	RR	03-06	**LS**
FMX	650		05-08	**LS**
NT	650	V Deauville	01-01	**LS**
NC	700	D Integra	12-13	**LS**
NC	700	SA ABS	12-13	**LS**
NC	700	SD ABS	12-13	**LS**
NC	700	XA ABS	12-13	**LS**
NC	700	XD ABS	12-13	**LS**
CB	750	N, F,		
		Seven Fifty	92-95	**LS**
CBR	900	RR	98-99	**LS**
CBR	900	RR Fireblade	92-03	**LS**
	919		02-02	**LS**
CBR	929	RR	00-01	**LS**
CBR	954	RR	02-03	**LS**
CB	1000	F (Big One)	93-97	**LS**
CBR	1000	RR Fireblade	04-05	**LS**
CRF	1000	L Africa Twin	16-19	**LS**
CRF	1000	L Africa Twin		
		Adventure		
		Sports	18-19	**LS**
RVT	1000	RC51	00-06	**LS**
VTR	1000	SP-1, SP-2	00-06	**LS**
VTR	1000	Super Hawk	97-07	**LS**
CB	1100		13-13	**LS**
CB	1100	, EX	14-19	**LS**
CB	1100	EX ABS	17-19	**LS**
CB	1100	RS ABS	17-19	**LS**
CRF	1100	L Africa Twin	20-21	**LS**
CRF	1100	L Africa Twin		
		Adventure		
		Sports	20-21	**LS**
VT	1100	C2 Shadow		
		A.C.E.	95-04	**LS**
VT	1100	C2 Shadow		
		Sabre	00-05	**LS**
VT	1100	C3 Shadow		
		Aero	98-04	**LS**
VT	1100	T Shadow	98-04	**LS**

HONDA				
CB	1300		05-13	**LS**
CB	1300	S	11-15	**LS**
VT	1300	CX A Fury	10-18	**LS**
VT	1300	Interstate	11-15	**LS**
VT	1300	Sabre	11-13	**LS**
VT	1300	Stateline	11-16	**LS**
VTX	1300	C	04-09	**LS**
VTX	1300	S	03-07	**LS**
KAWASAKI				
ZX-25R	250		20-20	**LS**
EN	650	Vulcan S	15-19	**LS**
EN	650	Vulcan S Cafe	17-19	**LS**
EN	650	Vulcan S SE	17-18	**LS**
EX	650	Ninja KRT ABS	17-20	**LS**
EX	650	Ninja		
		Performance		
		ABS	17-20	**LS**
EX	650	Ninja Tourer		
		ABS	17-20	**LS**
Z	650	ABS	17-19	**LS**
Z	750	, ABS	07-12	**LS**
Z	900	RS	18-21	**LS**
Z	900	RS Cafe	18-21	**LS**
KLE	1000	Versys	12-18	**LS**
KLE	1000	Versys ABS	15-20	**LS**
KLE	1000	Versys LT	15-16	**LS**
KLE	1000	Versys SE	19-20	**LS**
KLV	1000		04-07	**LS**
Z	1000	H2	20-20	**LS**
SUZUKI				
DL	250	V-Strom	17-19	**HF**
GW	250	Inazuma	12-19	**LS**
DL	650	V-Strom	04-20	**LS**
DL	650	V-Strom XT	15-20	**LS**
GSF	650	Bandit	07-11	**LS**
GSF	650	Bandit /		
		S Bandit ABS	06-06	**LS**
GSF	650	Bandit ABS	07-12	**LS**
GSF	650	S Bandit	07-11	**LS**
GSF	650	S Bandit ABS	07-13	**LS**
GSX	650	F	08-18	**HF**
SV	650	,S	03-12	**LS**
SV	650	,S ABS	07-18	**LS**

SUZUKI				
GSR	750		11-16	**LS**
GSX-S	750		15-19	**LS**
GSX-S	750	Z	15-16	**LS**
DL	1000	V-Strom	02-13	**LS**
GSX-S	1000		15-19	**LS**
GSX-S	1000	F	15-19	**LS**
GSX-S	1000	Katana	19-21	**LS**
SV	1000	, S	03-07	**LS**
GSF	1200	Bandit	06-06	**LS**
GSF	1200	S Bandit	06-06	**LS**
GSF	1250	A Bandit	07-18	**LS**
GSF	1250	Bandit	06-18	**LS**
GSF	1250	F Bandit	12-18	**LS**
GSF	1250	S Bandit	06-18	**LS**
GSF	1250	SA Bandit	07-18	**LS**
GSX	1250	FA Bandit	16-18	**LS**
GSX	1250	FA Traveller	15-16	**LS**
	1300	B-King	07-07	**LS**
YAMAHA				
FZ6	600		04-08	**LS**
FZ6	600	Fazer	04-08	**LS**
FZ6	600	Fazer S2	07-09	**LS**
FZ6	600	Fazer S2 ABS	07-09	**LS**
FZ6	600	S2	07-09	**LS**
FZ6	600	S2 ABS	07-09	**LS**
YZF	600	R6	03-16	**LS**
FZ-07	700		14-17	**LS**
MT-07	700		14-18	**LS**
MT-07	700	Moto Cage	15-17	**LS**
MT-07	700	SP	18-18	**LS**
MT-07	700	Tracer	16-20	**LS**
MT-07	700	Tracer GT	19-19	**LS**
XSR	700		16-20	**LS**
XSR	700	XTribute	19-20	**LS**
	800	Fazer 8	10-15	**LS**
FZ8	800		10-14	**LS**
FJ-09	850		15-17	**LS**
FZ-09	850		14-17	**LS**
MT-09	850		18-18	**LS**
MXT	850	Niken	18-18	**LS**
MXT	850	Niken GT	19-20	**LS**
MT-09	900		14-20	**LS**
MT-09	900	SP	18-20	**LS**
MT-09	900	Sport Tracker	15-16	**LS**

Brake Pad 1:1 Drawings, Compounds, Fitments

Applications for this part number continues on following page.

Available compounds **HF • DC • RQ • H.HF** **SBS 656**

1 set = 6 pcs.

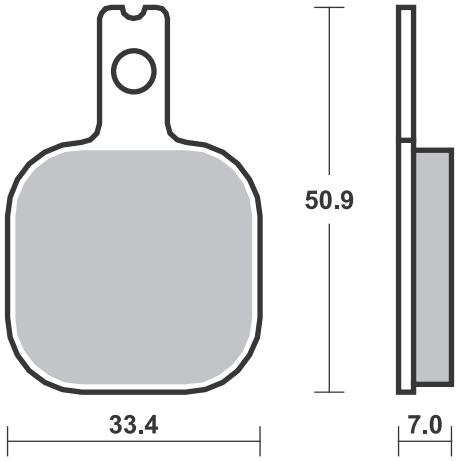

Available compounds **HF • LS • RQ** **SBS 657**

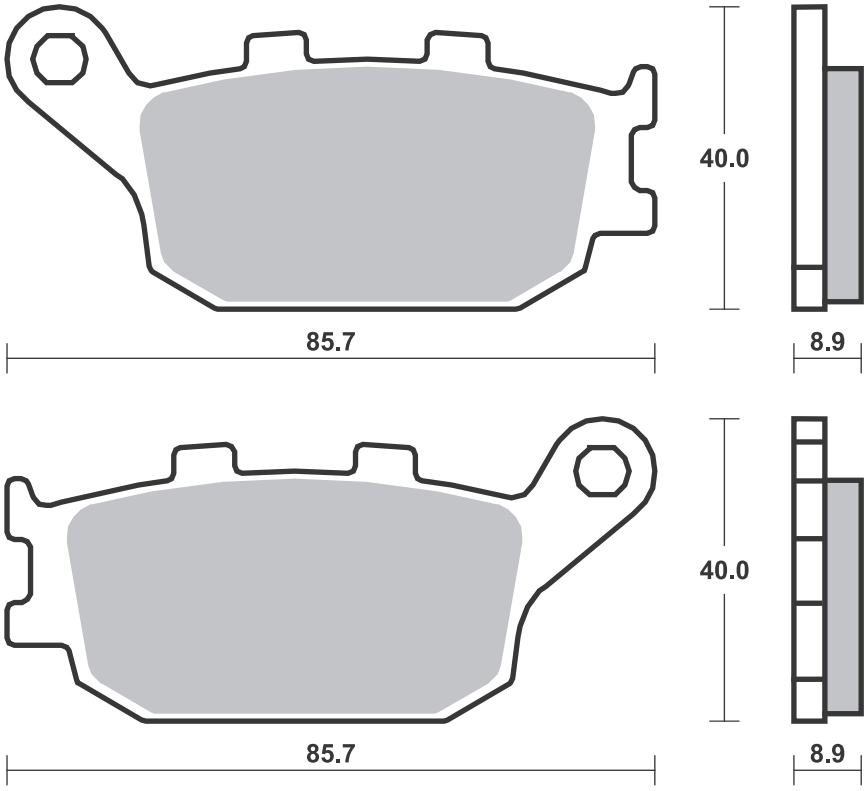

SBS 657 Recommended compound

YAMAHA				
MT-09	900	Street Rally	14 - 16	**LS**
MT-09	900	Tracer	15 - 20	**LS**
MT-09	900	Tracer GT	18 - 20	**LS**
XSR	900		16 - 20	**LS**
XSR	900	Abarth	17 - 18	**LS**
FZ1	1000	Fazer	06 - 16	**LS**
FZ-10	1000		16 - 17	**LS**
MT-10	1000		16 - 20	**LS**
MT-10	1000	SP	17 - 19	**LS**
YZF	1000	R1	04 - 06	**LS**
YZF	1000	R1 (4-pad)	07 - 14	**LS**
YZF	1000	R1 (4-pad)		
		ABS	12 - 14	**LS**
YZF	1000	R1 LE	06 - 06	**LS**

SBS 658 Recommended compound

BUELL				
		all models	94 - 97	**HF**
RS	1200		12 - 12	**HF**
PERFORMANCE MACHINE				
125 X 6				
137 X 6				

Available compounds **HF • LS • RQ** **SBS 657**

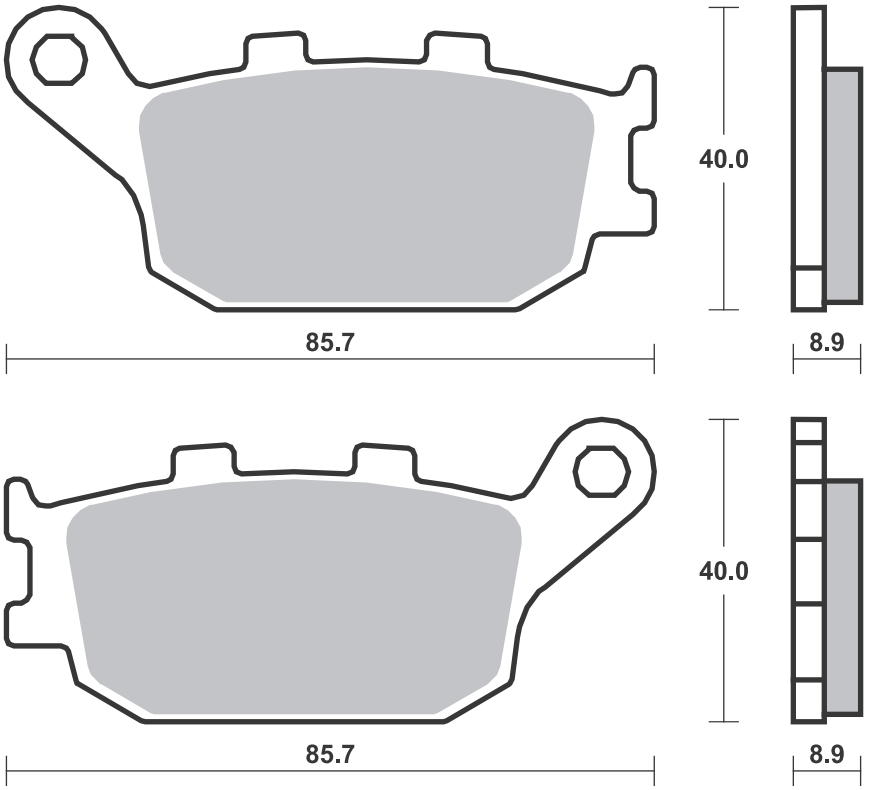

Available compounds **HF • RQ • H.HF • H.CT** **SBS 658**

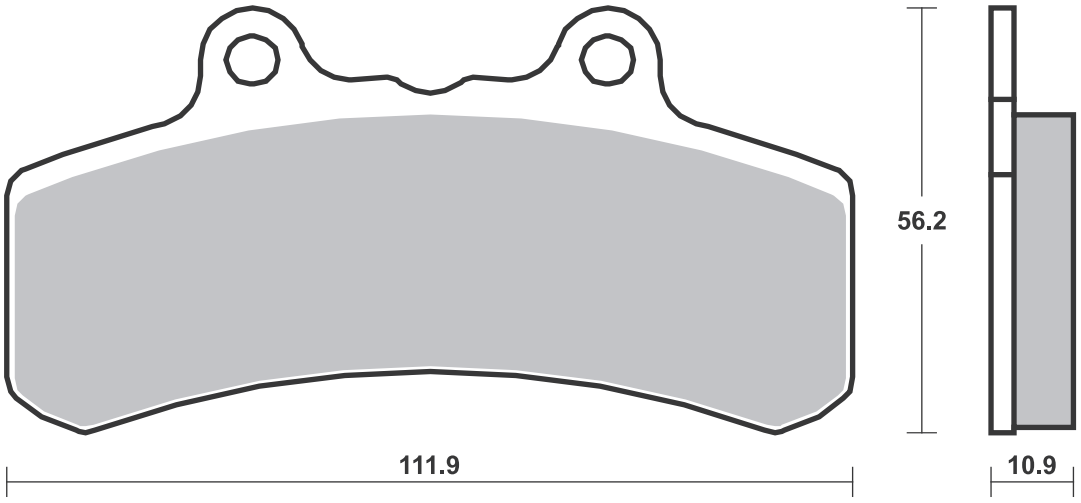

Dimensions in mm / Dimensions en mm • 1” = 25.4 mm , 1 mm = 0.04”

SBS 659 Recommended compound

YAMAHA			
TZ	125	97-00	**RQ**
TZ	250	90-05	**RQ**

SBS 660 Recommended compound

A.P. RACING CALIPERS
6 Piston 3366/3367 Series

SBS 661 Recommended compound

A.P. RACING CALIPERS
CP-3485-8S0/9S0
CP-3569-4S0/5S0
CP-3586-4S0/5S0

Available compounds **HF • RQ** **SBS 659**

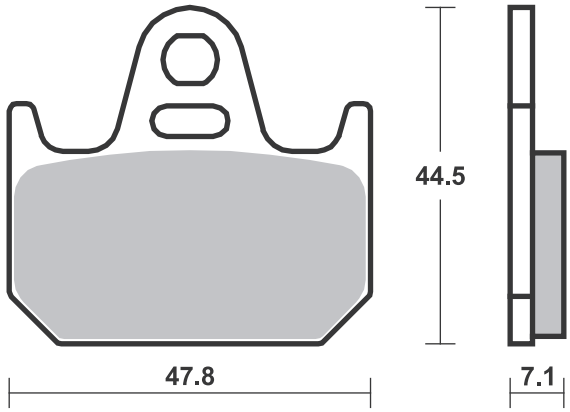

Available compounds **RQ** **SBS 660**

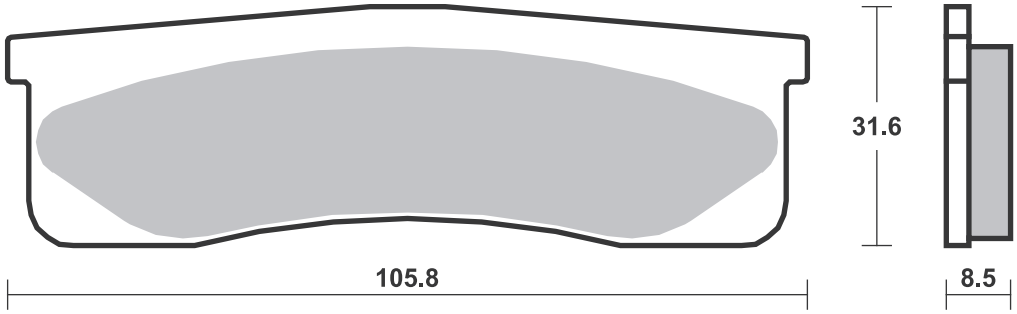

Available compounds **RQ** **SBS 661**

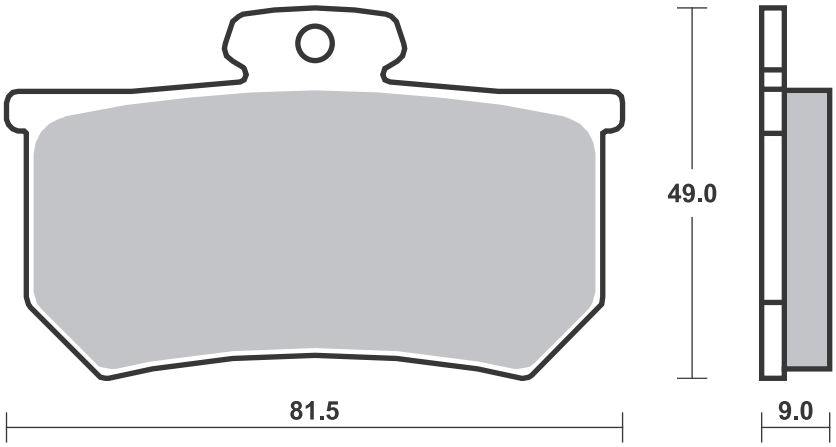

Dimensions in mm / Dimensions en mm • 1” = 25.4 mm , 1 mm = 0.04”

SBS 662 Recommended compound

PERFORMANCE MACHINE	
124 X 4HR	
137 X 4	

SBS 663 Recommended compound

SYM				
NH	125	T	19-19	**HF**
NH	125	X	19-19	**HF**
YAMAHA				
XJ	400	S Seca II	93-93	**HS**
XV	535	DX Virago	98-03	**HS**
XV	535	S Virago	96-03	**HS**
XV	535	Virago	95-97	**HS**
XJ	600	SECA II	92-96	**HS**
XVS	650	V-Star	09-14	**HS**
XVS	650	V-Star Classic	98-06	**HS**
XVS	650	V-Star Custom	98-06	**HS**
XVS	650	V-Star Tourer	09-14	**HS**
XV	750	Virago	94-97	**HS**
SCR	950	Scrambler	17-19	**HS**
XV	950	Bolt	14-18	**HS**
XV	950	Bolt C-Spec	15-18	**HS**

YAMAHA				
XV	950	Bolt Racer	17-18	**HS**
XV	950	Bolt R-Spec	14-21	**HS**
XVS	950	A Midnight Star	09-13	**HS**
XV	1100	Virago	94-98	**HS**
XVS	1300	Stryker	11-14	**HS**
XVS	1300	Stryker Bullet Cowl	15-15	**HS**
XVZ	1300	Royal Star Venture S	08-13	**HS**
XVZ	1300	TF Royal Star Venture	99-01	**HS**
XV	1600	Midnight Star	99-07	**HS**
XV	1600	Road Star	99-07	**HS**
XV	1600	Silverado	99-07	**HS**

SBS 665 Recommended compound

YAMAHA				
FZR	600	R	92-95	**HS**
FZR	1000	EX UP	92-93	**HS**

Available compounds **HF • RQ • H.HF • H.CT** **SBS 662**

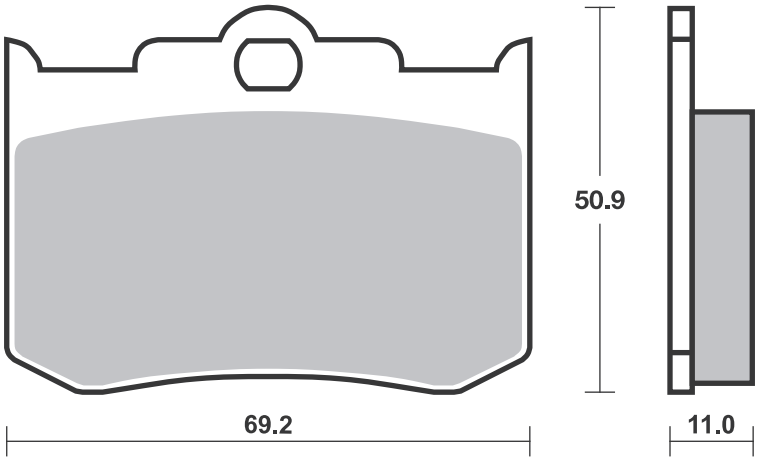

Available compounds **HF • HS** **SBS 663**

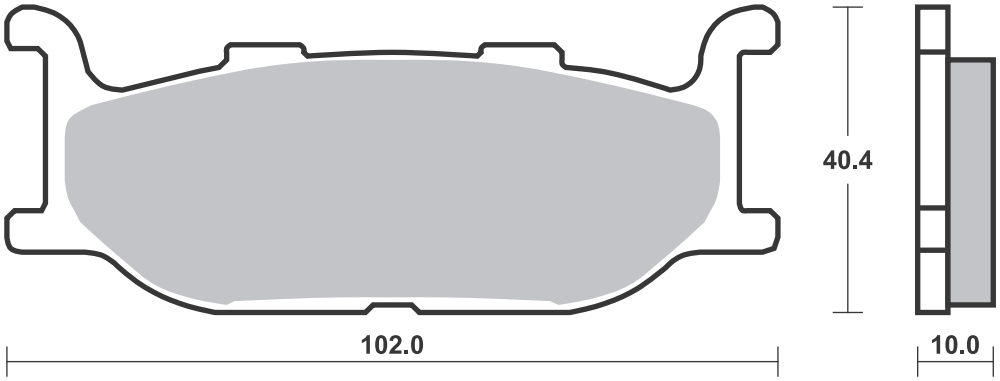

Available compounds **HF • HS** **SBS 665**

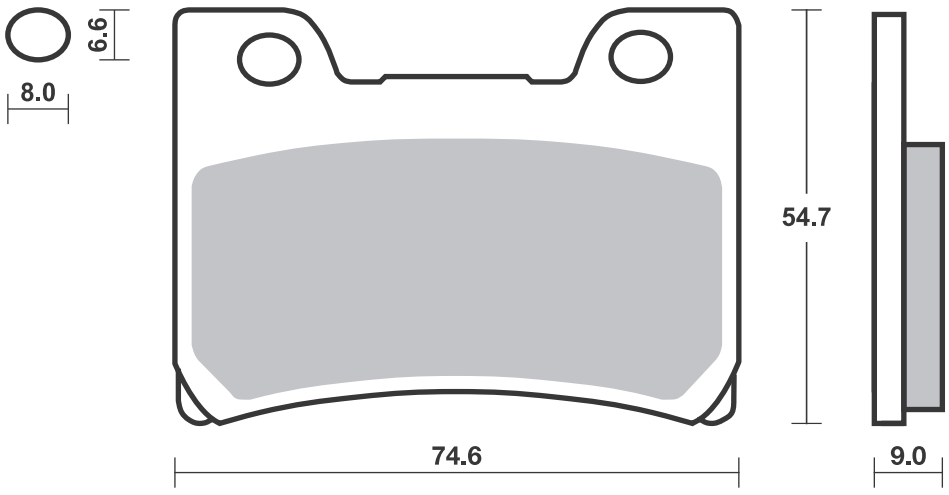

Dimensions in mm / Dimensions en mm • 1” = 25.4 mm , 1 mm = 0.04”

SBS 667 Recommended compound

TOMOS					
MC	50	Senior Pro	04-06	**HF**	**HF**

SBS 668 Recommended compound

HARLEY DAVIDSON					
FLT		Series	88-99		**H.LS**
FLHS	1340	Electra Glide Sport	90-90		**H.LS**
FLHTC	1340	Electra Glide Classic	90-99		**H.LS**
FLHTC	1340	Ultra Classic	90-99		**H.LS**
FLST	1340	Heritage Softail	88-99		**H.LS**
FLT/H	1340	Series	86-87		**H.LS**
FLTC	1340	Tour Glide Classic	90-90		**H.LS**

Available compounds **HF** **SBS 667**

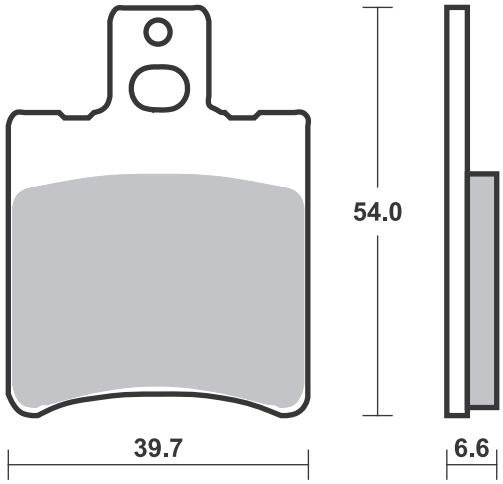

Available compounds **H.HF • H.CT • H.LS** **SBS 668**

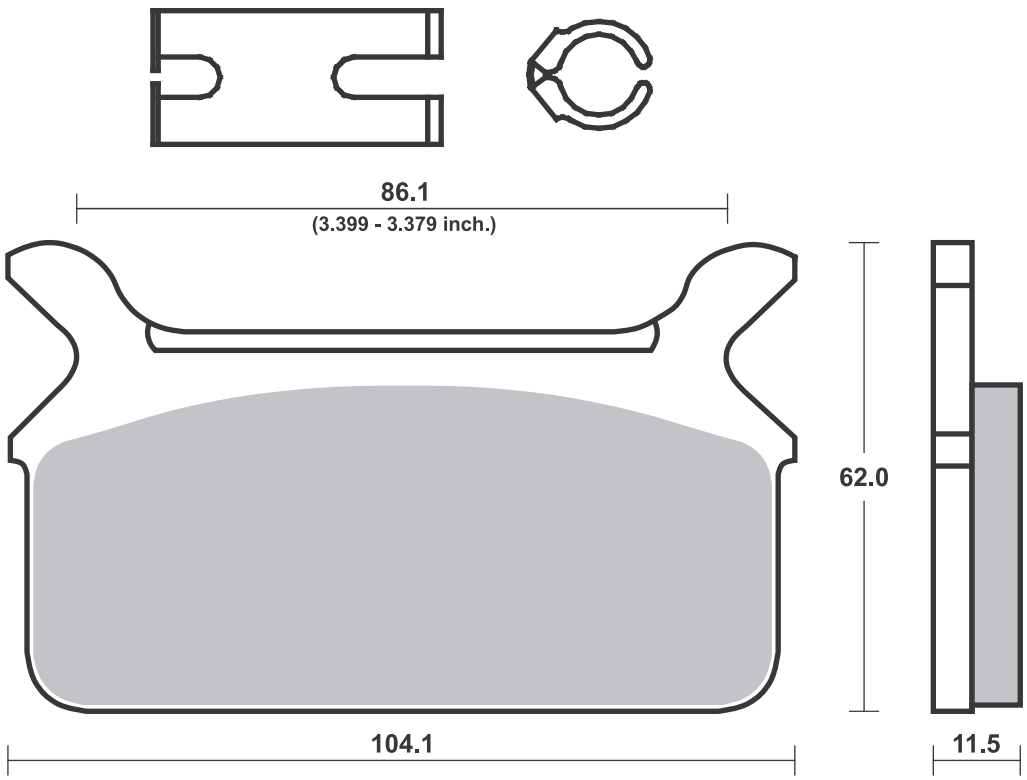

Dimensions in mm / Dimensions en mm • 1” = 25.4 mm , 1 mm = 0.04”

SBS 669 Recommended compound

HARLEY DAVIDSON				
XLH		Series	88-99	**H.LS**
XLH	883	Sportster	87-99	**H.HF**
XLH	1100		87-88	**H.LS**
XLH	1200	Sportster	90-99	**H.LS**
FLHT	1340	Electra Glide		
		Classic	87-99	**H.LS**
FLHTC	1340	Electra Glide		
		Classic	93-93	**H.LS**
FLSTC	1340	Heritage		
		Softail Cl.	90-99	**H.LS**
FLSTF	1340	Fat Boy	90-99	**H.LS**
FLSTN	1340	Heritage		
		Softail Nost.	93-99	**H.LS**
FXDB	1340	Dyna Glide		
		Daytona	91-99	**H.LS**
FXDB	1340	Dyna Glide		
		Sturgis	91-99	**H.HF**
FXDB	1340	Sturgis	91-99	**H.LS**
FXDL	1340	Dyna Low		
		Rider	93-99	**H.LS**
FXDWG	1340	Dyna Wide		
		Glide	93-99	**H.LS**
FXE	1340		82-82	**H.HF**
FXLR	1340	Low Rider		
		Custom	87-99	**H.LS**
FXR	1340		87-88	**H.LS**
FXR	1340	Super Glide	90-99	**H.LS**
FXRS	1340	Low Rider		
		Sport	87-99	**H.LS**

HARLEY DAVIDSON				
FXRS	1340	Low Rider		
		Sport Ed.	90-99	**H.LS**
FXRS	1340	Low Rider,		
		Convert.	90-99	**H.LS**
FXRT	1340	Sport Glide	90-99	**H.LS**
FXSTC	1340	Softail		
		Custom	88-99	**H.LS**
FXSTS	1340	Springer		
		Softail	90-99	**H.LS**
FXWG	1340		87-88	**H.LS**

SBS 671 Recommended compound

APRILIA					
SX	125		08-13	**HF**	
RST	1000	Futura	01-03		**LS**
BENELLI					
BX	449	Cross	07-09	**RSI**	
BX	505	Enduro	08-08	**SI**	
BIMOTA					
DBX	1100		13-18		**LS**
BMW					
G	450	X	08-10	**SI**	
	1200	HP2 Enduro	04-06		**LS**
	1200	HP2 Sport	08-10		**LS**
K	1200	GT (K44) With			
		Integral ABS	04-08		**LS**
R	1200	Nine-T	14-21		**LS**
R	1200	Nine-T Pure	17-21		**LS**
R	1200	Nine-T Racer	17-20		**LS**
R	1200	Nine-T			
		Scrambler	16-21		**LS**
R	1200	Nine-T			
		Urban GS	17-21		**LS**
K	1300	GT	09-10		**LS**
BREMBO RACING CALIPERS					
Floating Motocross					
Caliper 22.5930.62					
Off Road 122A99021, P2 24					

BREMBO RACING CALIPERS					
Off Road XQ21361, P2 28					
CAGIVA					
	900	Elefant	93-97	**HF**	**HF**
CCM					
	450	MX	08-10	**RSI**	
GP	450		16-16	**SI**	
604	600	RS	01-01	**HF**	
604E	600	Sport	99-01	**SI**	
604E	600	Supermoto	99-01	**SI**	
C25	600		96-98	**SI**	
	644	DS	03-06	**HF**	
	644	R30	02-06	**HF**	
DUCATI					
	620	Multistrada	05-06	**HS**	
	695	Monster	07-12	**HS**	
	800	Monster S2R	05-07	**HS**	
	800	Monster S2R			
		ABS	05-07	**HS**	
	950	Multistrada	17-21		**LS**
	950	Multistrada S	19-21		**LS**
	1200	Multistrada	15-16		**LS**
	1200	Multistrada			
		Enduro	16-18		**LS**
	1200	Multistrada			
		Enduro Pro	18-18		**LS**
	1200	Multistrada S	15-17		**LS**

DUCATI					
	1200	Multistrada S			
		D-air	15-17		**LS**
	1200	Multistrada S			
		Pikes Peak	16-17		**LS**
	1260	Multistrada	18-18		**LS**
	1260	Multistrada			
		Enduro	19-21		**LS**
	1260	Multistrada S	18-19		**LS**
	1260	Multistrada S			
		D-air	18-19		**LS**
	1260	Multistrada S			
		Grand Tour	20-20		**LS**
	1260	Multistrada S			
		Pikes Peak	18-19		**LS**
GAS GAS					
	50	Wild HP	04-07	**SI**	**SI**
MC	85		21-21	**RSI**	
EC	125		97-99	**SI**	
MC	125		21-21	**RSI**	
	200	Wild HP	08-09	**SI**	**SI**
EC	200		99-99	**SI**	
EC	200	Ranger Enduro	19-19	**SI**	
	240	Wild HP	04-06	**SI**	**SI**
	250	Wild HP	08-08	**SI**	**SI**
EC	250		97-99	**SI**	
EC	250		21-21	**SI**	
EC	250	F	21-21	**SI**	
MC	250		97-99	**RSI**	

Applications for this part number continues on following page.

Available compounds **H.HF • H.CT • H.LS** **SBS 669**

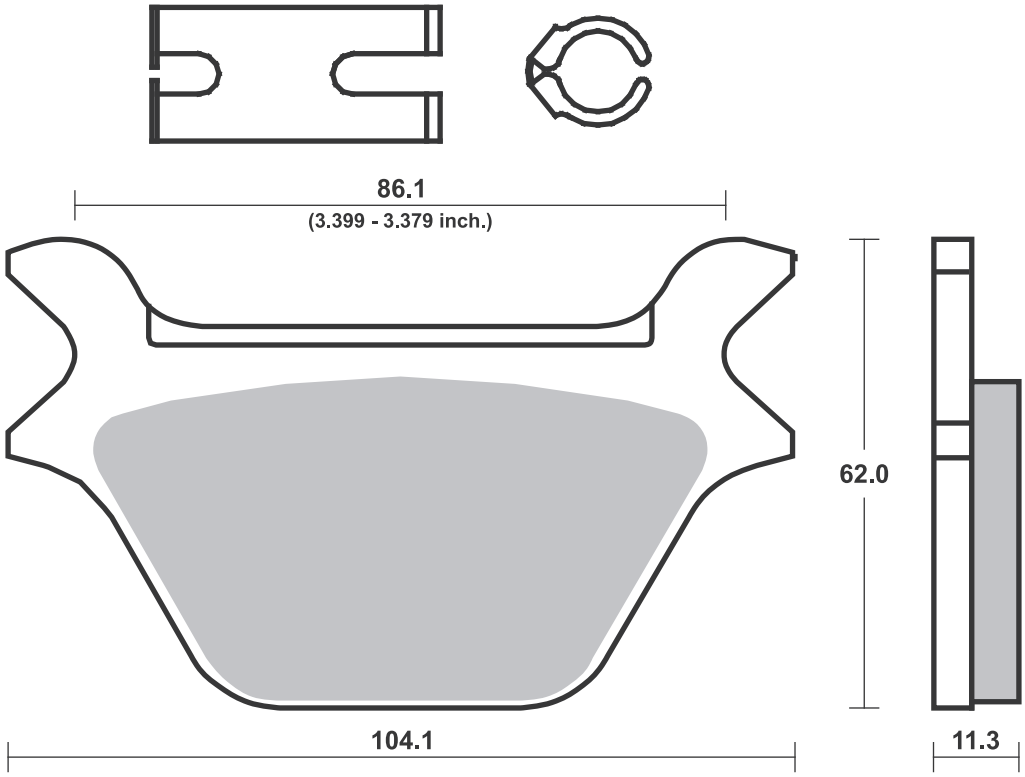

Available compounds **HF • HS • LS • RQ • CS • SI • RSI • H.HF • H.CT • H.LS** **SBS 671**

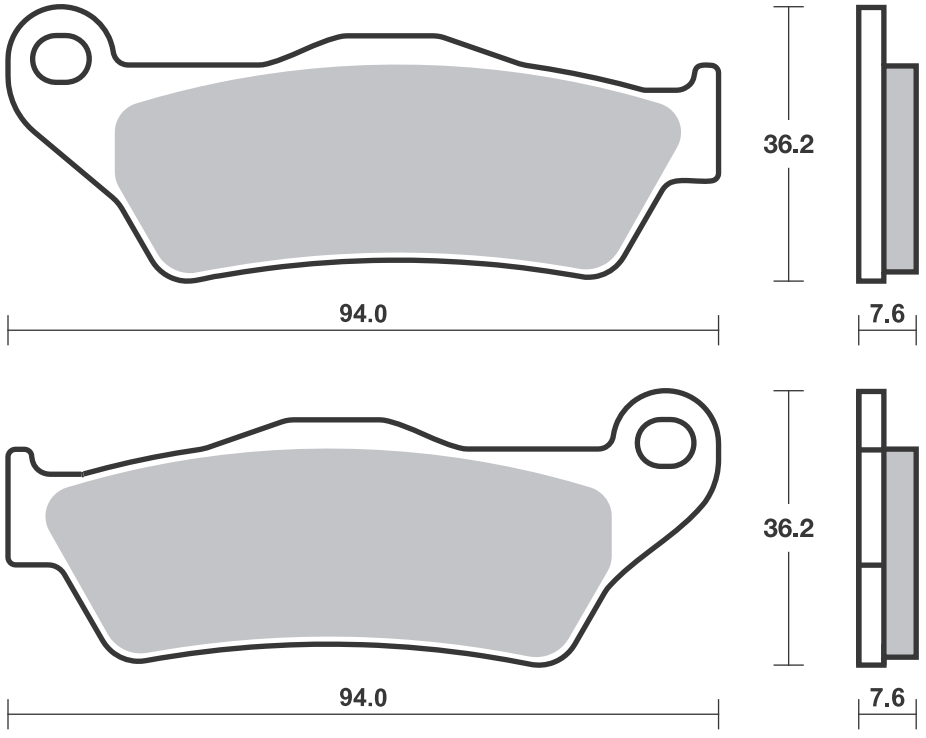

Dimensions in mm / Dimensions en mm • 1” = 25.4 mm , 1 mm = 0.04”

SBS 671 Recommended compound

GAS GAS

MC	250 F	21-21	**RSI**	
	300 Wild HP	03-05	**SI**	**SI**
EC	300	99-99	**SI**	
EC	300	21-21	**SI**	
EC	300 Ranger Enduro	19-19	**SI**	
EC	350 F	21-21	**SI**	
	450 Wild HP	03-09	**SI**	**SI**
MC	450 F	21-21	**RSI**	
	515 Wild HP	09-09	**SI**	**SI**

HARLEY DAVIDSON

XG	500 Street	16-18		**H.HF**
XG	750 Street	16-17		**H.HF**
XG	750 Street Rod	18-20		**H.HF**

HIGHLAND

	450 MX	06-09	**RSI**	
	950 V2 Motard	00-08	**HF**	
	950 V2 Outback	99-08	**HF**	

HUSABERG

	all models	93-98	**SI**	
TE	125	13-13	**SI**	
FE	250	13-13	**SI**	
TE	250	11-13	**SI**	
TE	300	11-13	**SI**	
FE	350	13-13	**SI**	
FE	390	10-13	**SI**	
FC	400	99-02	**RSI**	
FE	400 ,S,E	99-03	**SI**	
FC	450	03-08	**RSI**	
FE	450	09-13	**SI**	
FE	450 e	04-08	**SI**	
FX	450 e	03-08	**RSI**	
FC	470 , e	01-02	**RSI**	
FX	470 e	01-02	**RSI**	
FC	501	99-01	**RSI**	
FE	501	13-13	**SI**	
FE	501 ,S,E	99-04	**SI**	
FC	550	01-05	**RSI**	
FE	550 e	04-08	**SI**	
FE	570	09-13	**SI**	
FC	600	99-01	**RSI**	
FE	600 ,S,E	99-02	**SI**	
FE	650 e	01-08	**SI**	
FX	650 e	01-05	**RSI**	

HUSQVARNA

TC	85	21-21	**RSI**	
CR	125	96-13	**RSI**	
SM	125 S	09-13	**HF**	
SM	125 S 4T	11-13	**HF**	
SM	125 Supermotard, S	99-13	**HF**	
TC	125	14-21	**RSI**	
TE	125	14-16	**SI**	
TE	125 4T	11-13	**HF**	
TX	125	17-19	**SI**	
WR	125	96-13	**SI**	
WRE	125	96-13	**SI**	
TE	150 I	20-20	**SI**	
CR	250	96-05	**RSI**	
FC	250	14-21	**RSI**	
FE	250	14-21	**SI**	
TC	250	02-21	**RSI**	
TE	250	02-18	**SI**	
TE	250 4T	10-13	**SI**	

HUSQVARNA

TE	250 I	20-20	**SI**	
WR	250	96-13	**SI**	
TC	300	14-15	**RSI**	
TE	300	14-19	**SI**	
WR	300	09-13	**SI**	
TE	310 4T	10-13	**SI**	
FC	350	14-21	**RSI**	
FE	350	14-21	**SI**	
TE	350	96-13	**SI**	
WR	360	98-13	**SI**	
TE	400	01-13	**SI**	
TE	410	96-13	**SI**	
TC	449	11-13	**RSI**	
TE	449	11-13	**SI**	
FC	450	14-21	**RSI**	
FE	450	14-21	**SI**	
TC	450	02-10	**RSI**	
TE	450	02-10	**SI**	
TE	450	14-14	**SI**	
FE	501	14-21	**SI**	
TC	510	02-10	**RSI**	
TE	510	02-10	**SI**	
TE	510 Centennial	04-05	**SI**	
TE	511	11-14	**SI**	
TC	570	01-13	**RSI**	
TE	570	01-13	**SI**	
TC	610	96-13	**RSI**	
TE	610 Rallye	96-13	**RSI**	
TE	630	10-13	**HS**	
TE	630	14-14	**SI**	
	900 Norden	20-20		**LS**

KTM

SX	85	21-21	**RSI**	
SX	85 (19"/16" wheels)	21-21	**RSI**	
	125 SuperMoto	00-03	**HF**	
EXC	125 Enduro	99-15	**SI**	
EXE	125	00-00	**HF**	
GS	125	92-97	**SI**	
LC2	125	99-99	**HF**	
MX	125	92-93	**SI**	
SX	125	96-21	**RSI**	
SX	144	07-08	**RSI**	
EXC	150 TPI	20-21	**SI**	
SX	150	09-21	**RSI**	
XC	150	10-14	**RSI**	
EXC	200 Enduro	99-16	**SI**	
SX	200	03-04	**RSI**	
XC	200	06-09	**RSI**	
XC-W	200	06-16	**RSI**	
EXC	250 Enduro	99-08	**SI**	
EXC	250 Enduro 4T	99-06	**SI**	
EXC	250 TPI	18-21	**SI**	
EXC-F	250 Enduro	07-19	**SI**	
MX	250	92-93	**SI**	
SX	250	96-21	**RSI**	
SX-F	250	06-21	**RSI**	
XC	250	06-14	**RSI**	
XC-W	250	08-17	**RSI**	
EXC	300	93-96	**SI**	
EXC	300 Enduro	99-08	**SI**	
EXC	300 TPI	18-21	**SI**	
MX	300	92-92	**SI**	
XC	300	06-14	**RSI**	
XC-W	300	06-08	**RSI**	
EXC-F	350	11-21	**SI**	

KTM

SX-F	350	11-21	**RSI**	
XC-F	350	12-17	**RSI**	
XCF-W	350	13-17	**RSI**	
MX	360	96-97	**SI**	
SX	360	96-97	**RSI**	
XC	360	96-97	**SI**	
EXC	380 Enduro	99-99	**SI**	
MX	380	98-98	**SI**	
SX	380	98-02	**RSI**	
XC	380	98-03	**SI**	
EXC	400 Racing	00-07	**SI**	
LC4	400	93-02	**SI**	
LC4-E	400 Enduro	99-02	**SI**	
SC	400	99-00	**SI**	
SX	400 Racing	00-02	**RSI**	
SXC	400 Tiainen Replica	99-00	**SI**	
XC-W	400	07-10	**RSI**	
EXC-F	450 Racing	04-19	**SI**	
SX-F	450	03-21	**RSI**	
XC-F	450	06-17	**RSI**	
XCF-W	450	07-15	**RSI**	
EXC-F	500	12-21	**SI**	
MX	500	92-93	**SI**	
XCF-W	500	12-17	**RSI**	
SX	505 Racing	07-09	**RSI**	
XC-F	505	08-09	**RSI**	
EXC	520 Racing	00-02	**SI**	
SX-F	520 Racing	00-02	**RSI**	
EXC	525 Racing	03-06	**SI**	
SX-F	525 Racing	03-06	**RSI**	
XC-F	525	07-07	**RSI**	
XCF-W	525	07-07	**RSI**	
EXC	530 Racing	08-11	**SI**	
XCF-W	530	09-11	**RSI**	
SXC	540 Tiainen Replica	99-00	**SI**	
LC4	600 Six Days	92-92	**SI**	
LC4	620 Competition	99-02	**SI**	
LC4	620 Competition SuperMoto	00-01	**HF**	
LC4	620 RXC	95-95	**SI**	
LC4	620 Supercompetition	01-01	**HF**	
SC	620	99-00	**SI**	
SX	620	95-99	**RSI**	
LC4	625 SC Supermoto	02-04	**HF**	
SXC	625	03-04	**HF**	
LC4	640 Adventure	99-04	**HF**	
LC4-E	640 Enduro	99-04	**HF**	
LC4-E	640 Supermoto	99-02	**HF**	
LC4	660 Rallye	01-03	**HF**	
	790 Adventure	19-20		**LS**
	790 Adventure R	19-20		**LS**
	790 Adventure R Rally	20-20		**LS**
	950 R Superenduro	06-08		**LS**
	950 SM	05-07		**LS**
	950 SM R	07-09		**LS**
LC8	950 Adventure	02-07		**LS**
	990 Adventure R	10-12		**LS**
	990 Adventure, Adventure S, ABS	06-11		**LS**
	990 Supermoto	07-11		**LS**
	990 Supermoto R	10-10		**LS**
	990 Supermoto T	09-13		**LS**

Applications for this part number continues on following page.

Available compounds **HF • HS • LS • RQ • CS • SI • RSI • H.HF • H.CT • H.LS** **SBS 671**

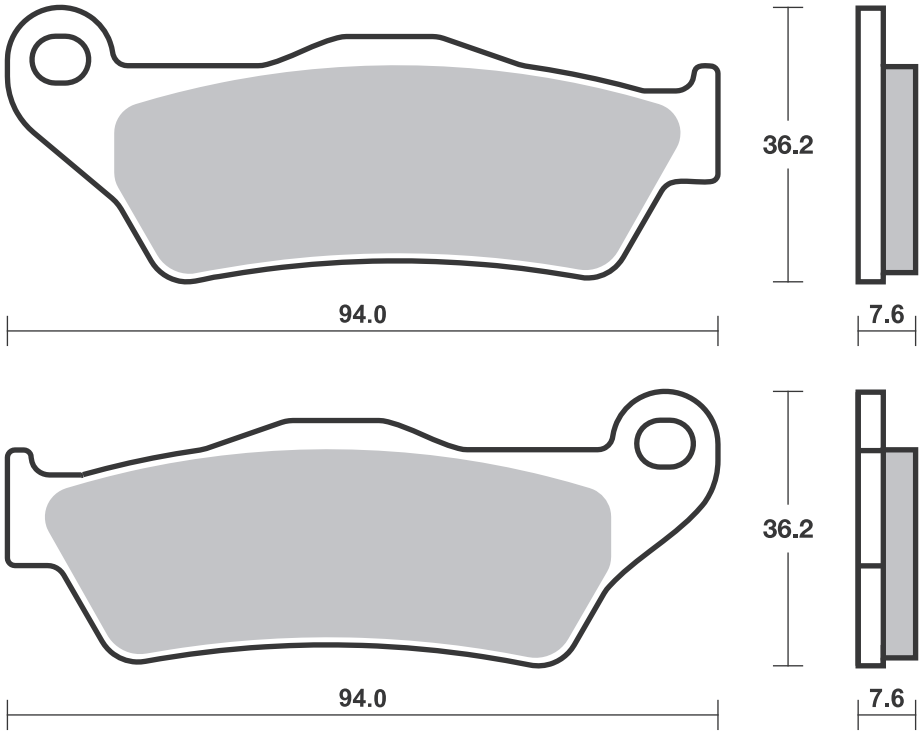

SBS 671 Recommended compound

KTM					
	1050	Adventure	15-16		**LS**
	1090	Super Adventure	17-19		**LS**
	1090	Super Adventure R	17-20		**LS**
	1190	Adventure	13-16		**LS**
	1290	Super Adventure	15-16		**LS**
	1290	Super Adventure R	17-20		**LS**
	1290	Super Adventure S	17-20		**LS**
	1290	Super Adventure T	17-19		**LS**
MAICO					
	250	Motocross/ Enduro	99-01	**SI**	
	500	Motocross/ Enduro	99-99	**SI**	
	500	Supermotard	99-99	**HF**	
MOTO-GUZZI					
ES	1100	Quota	99-03		**HF**
V	1100	Breva, ABS	05-07		**LS**
	1200	Griso 8V	07-13		**LS**
	1200	Griso 8V SE	18-18		**LS**
	1200	Norge	06-14		**LS**
	1200	Norge GT 8V	10-13		**LS**
	1200	Sport	07-08		**LS**
	1200	Sport 8V	12-13		**LS**
	1200	Sport 8V SE	12-15		**LS**
	1200	Stelvio	08-11		**LS**
	1200	Stelvio 8V SE	12-16		**LS**
	1200	Stelvio NTX	09-11		**LS**
V	1200	Breva	08-13		**LS**
MOTO-MORINI					
	650	Seiemmezzo	20-20		**LS**
	650	X-Cape	20-20		**LS**
	1200	Granferro	10-10		**LS**
	1200	Granpasso	08-13		**LS**
	1200	GT	10-10		**LS**
	1200	Scrambler	09-10		**LS**
ROYAL ENFIELD					
	411	Himalayan	19-20	**HF**	
	500	Bullet	20-20	**HS**	
	500	Bullet Trials	20-20	**HS**	
	500	Classic	19-19	**HF**	
SHERCO					
SE-R	125		17-19	**SI**	
SE	250	, R	14-14	**SI**	
SE	250	2.5i Enduro	06-11	**SI**	
SE	250	F, F-R	14-19	**SI**	
SE	250	i/iR	12-13	**SI**	
SE	250	i-F	13-13	**SI**	
SX	250	2.5i-F	09-11	**RSI**	
SCF-R	300		16-19	**SI**	
SE	300	, R	14-19	**SI**	
SE	300	3.0i-F	10-11	**SI**	
SE	300	F, F-R	14-19	**SI**	
SE	300	i/iR	12-13	**SI**	
SE	300	i-F	13-13	**SI**	
SE	450	4.5i Enduro	04-11	**SI**	
SE	450	F, F-R	14-19	**SI**	

SHERCO					
SE	450	iR	12-13	**SI**	
SE	510	5.1i Enduro	06-11	**SI**	
SE	510	iR	12-13	**SI**	
SWM					
RS	300	R	15-20	**SI**	
RS	500	R	15-20	**SI**	
TM					
	80	Cross	96-00	**RSI**	
MX	85		01-12	**RSI**	
EN	125	Enduro	01-17	**SI**	
MX	125		96-20	**RSI**	
	250	E	95-00	**RSI**	
EN	250	Enduro	01-15	**SI**	
EN	250	F Enduro	00-04	**SI**	
MX	250		01-20	**RSI**	
MX	250	F	01-20	**RSI**	
EN	300	Enduro	01-05	**SI**	
FT	300		17-19	**RSI**	
MX	300		98-04	**RSI**	
	320		96-97	**RSI**	
	400	F	00-01	**RSI**	
	400	F Enduro	01-01	**SI**	
EN	450	F Enduro	02-17	**SI**	
FT	450	Fi	17-19	**RSI**	
MX	450	F	02-20	**RSI**	
EN	530	F Enduro	01-05	**SI**	
FT	530	Fi	17-19	**RSI**	
MX	530	F	01-20	**RSI**	
TRIUMPH					
	800	Tiger XCA	18-18	**HS**	
	800	Tiger XCX	18-20	**HS**	
	800	Tiger XRT	18-18	**HS**	
	800	Tiger XRX	18-18	**HS**	
	800	Tiger XRX Low	18-20	**HS**	
	1200	Bonneville Bobber Black	18-19	**HS**	
	1200	Speedmaster	18-19	**HS**	
VERTEMATI					
C	500	Cross	02-04	**RSI**	
E	501	Enduro	02-04	**SI**	
S	501	Supermotard	02-04	**HF**	
VOR					
	400	Cross	00-01	**RSI**	
	400	Enduro	00-01	**SI**	
EN	400		02-03	**SI**	
MX	400		02-02	**RSI**	
EN	450		02-04	**SI**	
MX	450		02-04	**RSI**	
	500	492 Enduro	99-99	**SI**	
	500	495 Cross	99-99	**RSI**	
EN	530		02-04	**SI**	
MX	530		02-04	**RSI**	
YAMAHA					
FZ25	250		19-19	**HF**	
XT	660	Z Tenere	08-14	**HS**	
XT	660	Z Tenere ABS	11-14	**HS**	
XTZ	700	Tenere	19-21	**HS**	
ZERO					
FX		ZF2.8	15-15	**HS**	
FX		ZF5.7	15-15	**HS**	

Available compounds **HF • HS • LS • RQ • CS • SI • RSI • H.HF • H.CT • H.LS** **SBS 671**

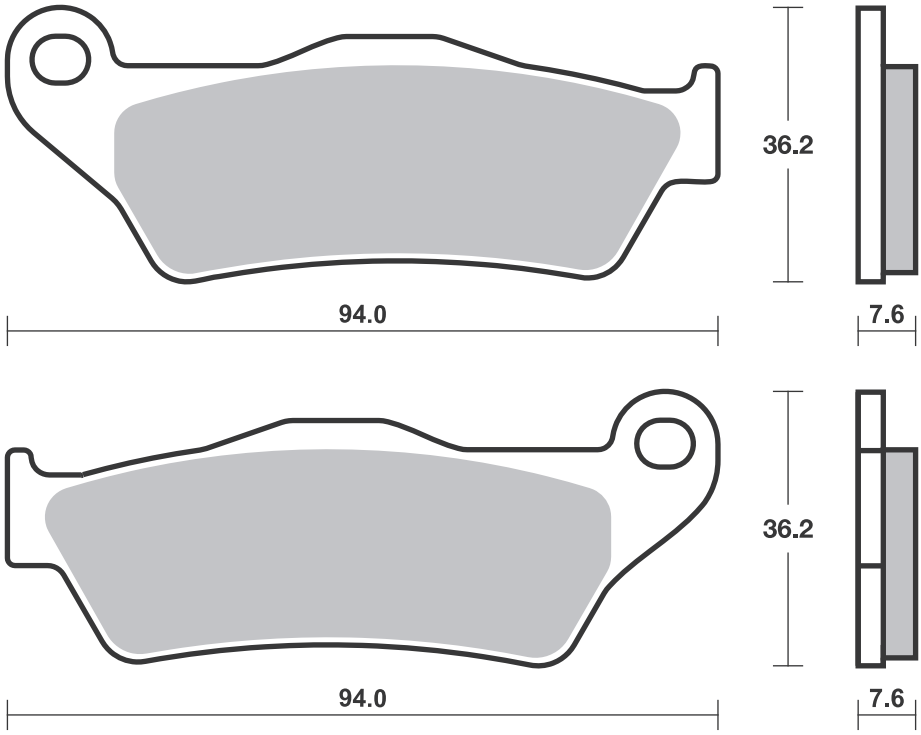

SBS 672 Recommended compound

BETA					
TR	125	34	92-92	**HF**	
TR	125	36	92-92	**HF**	

SBS 674 Recommended compound

APRILIA					
	650	Pegaso	95-00	**HS**	
ETV	1000	Caponord	01-08	**HS**	
ETV	1000	Caponord Rally Raid	04-08	**HS**	
BENELLI					
TRK	502	X	19-19	**HS**	
BIMOTA					
DBX	1100		13-18	**HS**	
BMW					
F	650	, ST	94-00	**HF**	
F	650	CS Scarver	02-06	**HS**	
F	650	GS	08-12	**HS**	
F	650	GS ABS	01-07	**HF**	
F	650	GS ABS	08-12	**HS**	
F	650	GS Dakar	01-07	**HF**	
F	650	GS, Rallye	01-07	**HF**	
F	650	ST Strada	97-01	**HF**	
G	650	GS	09-15	**HS**	
G	650	GS Sertao	12-14	**HS**	
G	650	Xchallenge	06-07	**HS**	
G	650	Xcountry	06-09	**HS**	
F	700	GS	13-16	**HS**	
F	750	GS	18-21	**HS**	
F	800	GS	08-20	**HS**	
F	850	GS	18-21	**HS**	
	1200	HP2 Enduro	04-06	**HS**	
R	1200	GS	13-18		**LS**
R	1200	GS Adventure	14-16		**LS**
R	1200	R	15-18		**LS**
R	1200	RS	14-18		**LS**
R	1200	RT	14-18		**LS**
R	1250	GS	19-21		**LS**
R	1250	GS Adventure	19-21		**LS**
R	1250	R	19-21		**LS**
R	1250	RS	19-21		**LS**
R	1250	RT	19-21		**LS**
R	1250	RT Sport	19-20		**LS**
K	1600	B	17-21		**LS**
K	1600	Grand America	18-20		**LS**
K	1600	GT	11-21		**LS**
K	1600	GTL	11-21		**LS**

CF MOTO					
	400	NK Efi	17-17	**HS**	
	650	NK	14-16	**HS**	
	650	NK Efi	17-17	**HS**	
	650	TK	14-15	**HS**	
DUCATI					
	400	Scrambler Sixty Two	16-20	**HS**	
	1000	Biposto	07-08	**HS**	
	1000	GT	05-10	**HS**	
	1000	GT Touring	09-10	**HS**	
	1000	Paul Smart	05-08	**HS**	
	1000	Sport	05-09	**HS**	
	1000	Sport S	05-09	**HS**	
	1200	Diavel	11-18		**LS**
	1200	Diavel Strada	11-14		**LS**
	1200	Xdiavel	16-18		**LS**
	1200	Xdiavel S	16-18		**LS**
	1260	Diavel	19-20		**LS**
	1260	Diavel S	19-20		**LS**
	1260	Xdiavel	19-19		**LS**
	1260	Xdiavel S	19-19		**LS**
HARLEY DAVIDSON					
XG	500	Street	16-18	**H.HF**	
XG	750	Street	16-17	**H.HF**	
XG	750	Street Rod	18-20	**H.HF**	
HONDA					
CBR	250	R (Bybre cal)	11-11	**HS**	
NT	650	V Deauville	98-01	**HS**	
HUSQVARNA					
TR	650	Strada	13-13	**HS**	
TR	650	Terra	13-13	**HS**	
	701	Enduro LR	20-20	**HS**	
FE	701	Enduro	17-20	**HS**	
INDIAN					
	1000	Scout Sixty	17-18	**H.HS**	
	1200	Scout	17-20	**H.HS**	
	1200	Scout Bobber	17-20	**H.HS**	

KTM					
	450	Rally	11-17	**SI**	
	450	Rally	19-19	**SI**	
LC4	640	Adventure	05-07	**HF**	
	690	Enduro	08-14	**HS**	
	690	Enduro R	09-21	**HS**	
	950	R Superenduro	06-08	**HS**	
LC8	950	Adventure	02-07	**HS**	
	990	Adventure R	10-12	**HS**	
	990	Adventure, Adventure S, ABS	06-11	**HS**	
MOTO-GUZZI					
	940	Custom	07-07		**LS**
	1100	California EV	06-06		**LS**
	1100	California EV Touring	06-06		**LS**
	1100	California Jackal	00-00		**HF**
	1100	California Jackal	01-06		**LS**
	1100	California Jackal Basic	00-00		**HF**
	1100	California Jackal Basic	01-06		**LS**
	1100	California Special	99-00		**HF**
	1100	California Special	01-01		**LS**
	1100	California Special Sport Alloy	02-06		**LS**
	1100	California Stone Metal	02-03		**LS**
	1100	California Stone, Stone Touring	02-05		**LS**
	1100	California Titanium	03-05		**LS**
	1100	California Vintage	06-13		**LS**
	1100	Griso	05-10		**LS**
ES	1100	Quota	99-03	**HF**	
	1400	Audace	15-17		**LS**

Brake Pad 1:1 Drawings, Compounds, Fitments

Applications for this part number continues on following page.

Available compounds **HF** **SBS 672**

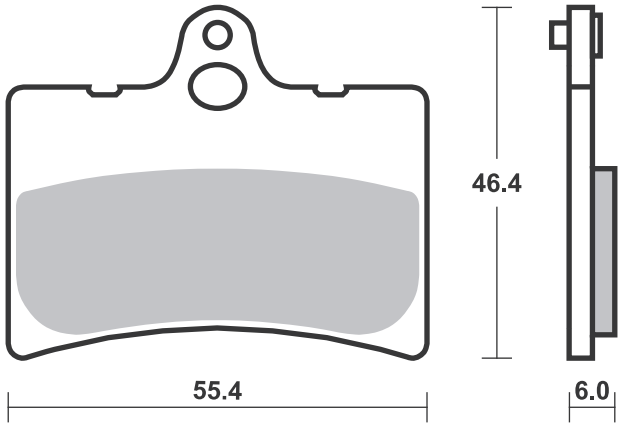

Available compounds **HF • HS • LS • SI • RSI • H.HF • H.CT • H.HS • H.LS** **SBS 674**

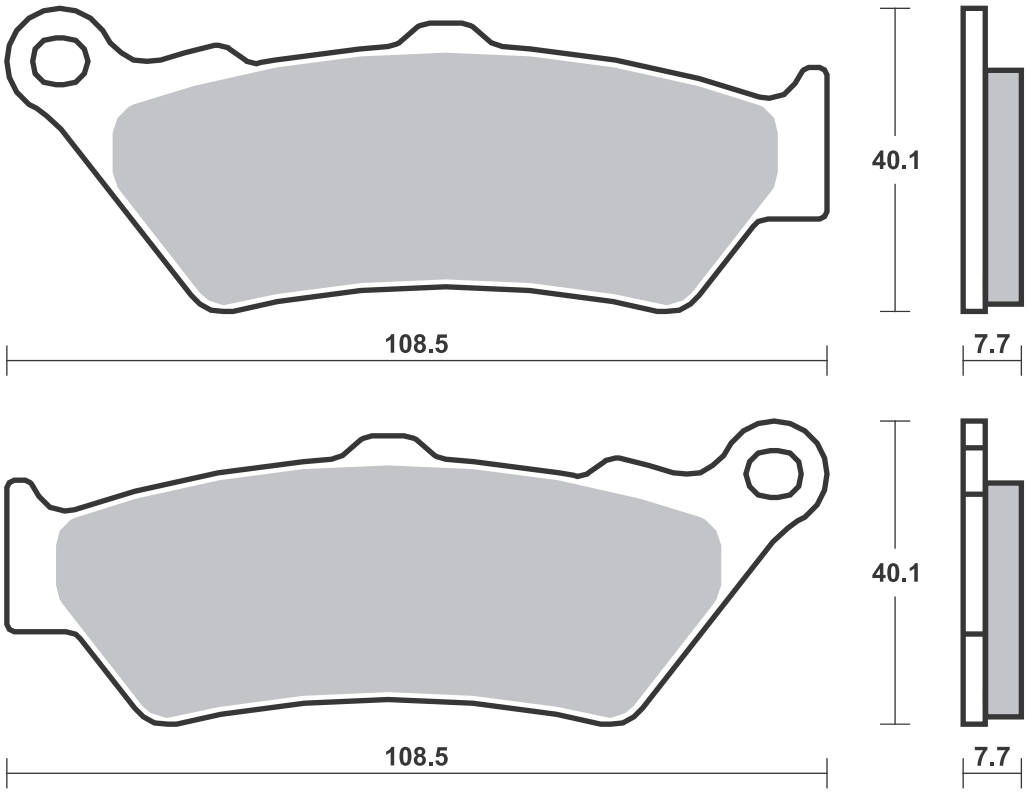

SBS 674 Recommended compound

MOTO-GUZZI				
	1400	California Custom	13-15	**LS**
	1400	California Touring	13-15	**LS**
	1400	California Touring SE	16-17	**LS**
	1400	Eldorado	15-17	**LS**
MGX-21	1400	Flying Fortress	15-17	**LS**
MOTO-MORINI				
	650	Seiemmezzo	20-20	**HS**
	650	X-Cape	20-20	**HS**
	1200	Granpasso	08-13	**HS**
	1200	GT	10-10	**HS**
	1200	Scrambler	09-10	**HS**
ROYAL ENFIELD				
	535	Continental GT	14-17	**HS**
	650	Continental GT	20-20	**HS**
	650	Interceptor	19-20	**HS**
SWM				
	600	Superdual GT Pack	18-18	**HS**
	600	Superdual T	18-20	**HS**
	600	Superdual X	18-20	**HS**
TRIUMPH				
	1200	Scrambler XC	19-20	**LS**
	1200	Scrambler XE	19-20	**LS**
	1600	Thunderbird	09-18	**LS**
	1700	Thunderbird Commander	14-18	**LS**
	1700	Thunderbird LT	14-18	**LS**
	1700	Thunderbird Nightstorm	14-18	**LS**
	1700	Thunderbird Storm	11-18	**LS**
	2300	Rocket III	04-13	**LS**
	2300	Rocket III Classic	07-13	**LS**
	2300	Rocket III Roadster	10-18	**LS**
	2300	Rocket III Touring	13-14	**LS**
	2300	Rocket X	15-15	**LS**
VICTORY				
	1200	Octane	17-17	**H.HS**
	1500	Kingpin	04-05	**H.LS**
	1500	Touring Cruiser	03-06	**H.LS**
	1500	V92C Cruiser	98-02	**H.LS**
	1500	V92C Deluxe	01-02	**H.LS**
	1500	V92SC Sport Cruiser	00-02	**H.LS**
	1500	Vegas	03-05	**H.LS**
	1500	Vegas 8-Ball	05-05	**H.LS**
	1634	Hammer	05-07	**H.LS**
VICTORY				
	1634	Hammer S	06-08	**H.LS**
	1634	Kingpin	06-07	**H.LS**
	1634	Kingpin Tour	06-07	**H.LS**
	1634	Vegas	06-07	**H.LS**
	1634	Vegas 8-Ball	06-07	**H.LS**
	1634	Vegas Jackpot	06-07	**H.LS**
YAMAHA				
XT	660	R	04-11	**HS**
ZERO				
DS		ZF12.5	15-15	**HS**
DS		ZF13.0	16-17	**HS**
DS		ZF9.4	15-15	**HS**
DS		ZF9.8	16-17	**HS**
DSR		ZF13.0	16-17	**HS**
FX		ZF3.3	16-17	**HS**
FX		ZF6.5	16-17	**HS**
FXS		ZF3.3	16-17	**HS**
FXS		ZF6.5	16-17	**HS**
S		ZF12.5	15-15	**HS**
S		ZF13.0	16-17	**HS**
S		ZF9.4	15-15	**HS**
S		ZF9.8	16-17	**HS**
SR		ZF12.5	15-15	**HS**
SR		ZF13.0	16-17	**HS**

SBS 675 Recommended compound

APRILIA				
	650	Pegaso Strada	05-09	**LS**
	750	Dorsoduro Factory	12-13	**LS**
SL	750	Shiver GT, ABS	09-12	**LS**
SL	750	Shiver, ABS	07-18	**LS**
SMV	750	Dorsoduro	08-18	**LS**
NA	850	Mana	07-07	**LS**
	1200	Caponord	13-19	**LS**
	1200	Caponord Rally	15-19	**LS**
	1200	Caponord Travel Pack	16-19	**LS**
	1200	Dorsoduro, ABS	11-14	**LS**
BENELLI				
BX	449	Cross	07-09	**RSI**
BX	505	Enduro	08-08	**SI**
BMW				
G	310	GS	17-21	**LS**
G	310	R	16-21	**LS**
F	650	, ST	94-00	**HF**
F	650	CS Scarver	02-06	**LS**
F	650	GS	08-12	**LS**
F	650	GS ABS	01-07	**HF**
F	650	GS ABS	08-12	**LS**
BMW				
F	650	GS Dakar	01-07	**HF**
F	650	GS, Rallye	01-07	**HF**
F	650	ST Strada	97-01	**HF**
G	650	GS	09-15	**LS**
G	650	GS Sertao	12-14	**LS**
G	650	Xchallenge	06-07	**LS**
G	650	Xcountry	06-09	**LS**
G	650	Xmoto	06-07	**LS**
F	700	GS	13-16	**LS**
F	750	GS	18-21	**LS**
F	800	GS	08-20	**LS**
F	800	GT	13-20	**LS**
F	800	R	09-18	**LS**
F	800	S	06-10	**LS**
F	800	ST	06-12	**LS**
F	800	ST Touring	11-12	**LS**
F	850	GS	18-21	**LS**
R	850	RT	96-01	**LS**
F	900	R	20-21	**LS**
F	900	XR	20-21	**LS**
S	1000	R	13-19	**LS**
S	1000	RR	09-21	**LS**
S	1000	RR HP4	12-14	**LS**
BREMBO RACING CALIPERS				
Motocross Caliper 22.2180.20				
CCM				
GP	450		16-16	**SI**
CCM				
604	600	RS	01-01	**HF**
604E	600	Sport	99-01	**SI**
604E	600	Supermoto	99-01	**SI**
C25	600		96-98	**SI**
	644	DS	03-06	**HF**
	644	R30	02-06	**HF**
CF MOTO				
	400	NK Efi	17-17	**LS**
	650	NK	14-16	**LS**
	650	NK Efi	17-17	**LS**
	650	TK	14-15	**LS**
DUCATI				
	400	Scrambler Sixty Two	16-20	**LS**
	797	Monster	17-21	**LS**
	797	Monster+	17-20	**LS**
	800	Scrambler	17-18	**LS**
	800	Scrambler Classic	15-18	**LS**
	800	Scrambler CR	17-21	**LS**
	800	Scrambler CR Cafe Racer	17-21	**LS**
	800	Scrambler Enduro	15-16	**LS**
	800	Scrambler Flat Track Pro	16-16	**LS**
	800	Scrambler Full		

Brake Pad 1:1 Drawings, Compounds, Fitments

Applications for this part number continues on following page.

Available compounds **HF • HS • LS • SI • RSI • H.HF • H.CT • H.HS • H.LS** **SBS 674**

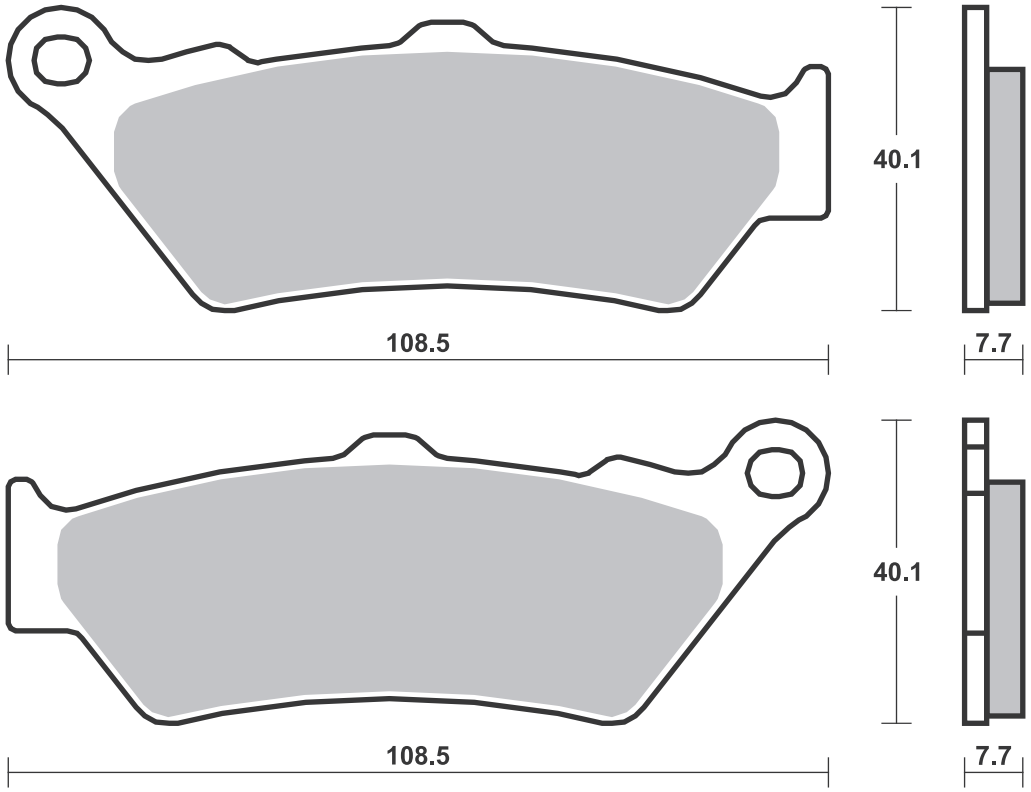

Available compounds **HF • LS • RQ • CS • SI • RSI • H.HF • H.CT • H.LS** **SBS 675**

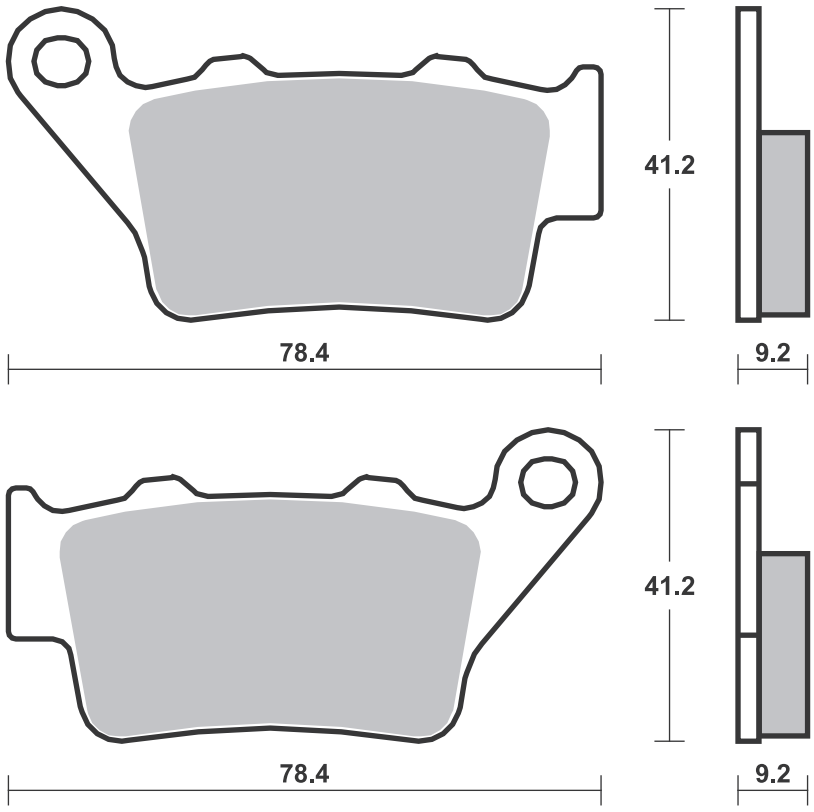

Dimensions in mm / Dimensions en mm • 1” = 25.4 mm , 1 mm = 0.04”

SBS 675 Recommended compound

DUCATI				
		Throttle	15-21	**LS**
	800	Scrambler Icon	15-21	**LS**
	800	Scrambler Icon Dark	20-21	**LS**
	800	Scrambler Mach 2.0	18-19	**LS**
	800	Scrambler SCR	20-20	**LS**
	800	Scrambler Street Classic	17-18	**LS**
	800	Scrambler Urban Enduro	16-16	**LS**
	800	Scrambler-X DS Desert Sled	17-21	**LS**
	1000	Biposto	07-08	**LS**
	1000	GT	05-10	**LS**
	1000	GT Touring	09-10	**LS**
	1000	Paul Smart	05-08	**LS**
	1000	Sport	05-09	**LS**
	1000	Sport S	05-09	**LS**
	1100	Scrambler	18-19	**LS**
	1100	Scrambler Desert X	20-20	**LS**
	1100	Scrambler Special	18-19	**LS**
	1100	Scrambler Sport	18-19	**LS**
FANTIC				
	125	Caballero Flat Track	17-17	**LS**
	500	Caballero	17-17	**LS**
GAS GAS				
EC	125		97-99	**SI**
EC	200		99-99	**SI**
EC	250		97-99	**SI**
MC	250		97-99	**RSI**
EC	300		99-99	**SI**
HARLEY DAVIDSON				
	975	Bronx	20-21	**H.LS**
	1250	Pan America	20-21	**H.LS**
HIGHLAND				
	450	MX	06-09	**RSI**
	950	V2 Motard	00-08	**HF**
	950	V2 Outback	99-08	**HF**
HONDA				
CBR	250	R (Bybre cal)	11-11	**LS**
HUSABERG				
FC	400		99-02	**RSI**
FE	400	,S,E	99-03	**SI**
FS	400	e, c	01-03	**RSI**
FC	450		03-08	**RSI**
FE	450	e	04-08	**SI**
FS	450	c	06-08	**RSI**
FS	450	e, c	03-05	**RSI**
FX	450	e	03-08	**RSI**
FC	470	, e	01-02	**RSI**
FX	470	e	01-02	**RSI**
FC	501		99-01	**RSI**
FE	501	,S,E	99-04	**SI**
FC	550		01-05	**RSI**
FE	550	e	04-08	**SI**
HUSABERG				
FC	600		99-01	**RSI**
FE	600	,S,E	99-02	**SI**
FE	650	e	01-08	**SI**
FS	650	e, c	01-08	**RSI**
FX	650	e	01-05	**RSI**
HUSQVARNA				
CR	125		96-04	**RSI**
SM	125	S	09-13	**HF**
SM	125	S 4T	11-13	**HF**
SM	125	Supermotard, S	99-13	**HF**
TE	125	4T	11-13	**HF**
WR	125		96-13	**SI**
WRE	125		96-13	**SI**
CR	250		96-04	**RSI**
TC	250		02-03	**RSI**
TE	250		02-13	**SI**
WR	250		96-13	**SI**
TE	350		96-13	**SI**
WR	360		98-13	**SI**
SM	400	R	02-02	**HF**
TE	400		01-13	**SI**
	401	Svartpilen	17-20	**LS**
	401	Vitpilen	17-20	**LS**
TE	410		96-13	**SI**
SM	450	R	03-04	**HF**
SM	450	R	05-05	**RSI**
TC	450		02-03	**RSI**
TE	450		02-10	**SI**
SM	510	R	05-05	**RSI**
TC	510		02-03	**RSI**
TE	510		02-10	**SI**
TE	510	Centennial	04-05	**SI**
	570	Nox	01-03	**HF**
SM	570	R	01-08	**HF**
TC	570		01-13	**RSI**
TE	570		01-13	**SI**
LT	610		00-02	**HF**
SM	610	Super Motard, S	98-00	**HF**
TC	610		96-13	**RSI**
TE	610	Rallye	96-13	**RSI**
SMR	630		04-08	**RSI**
TR	650	Strada	13-13	**LS**
TR	650	Terra	13-13	**LS**
	701	Enduro LR	20-20	**LS**
	701	Svartpilen	18-19	**LS**
	701	Vitpilen	18-20	**LS**
FE	701	Enduro	17-20	**LS**
SM	701	Supermoto	15-20	**LS**
	900	Nuda	12-13	**LS**
	900	Nuda R, ABS	12-13	**LS**
HYOSUNG				
RX	450	SM	08-11	**LS**
INDIAN				
	1000	Scout Sixty	17-18	**H.LS**
	1200	Scout	17-20	**H.LS**
	1200	Scout Bobber	17-20	**H.LS**
KTM				
	125	Duke	11-19	**LS**
	125	Sting	99-99	**HF**
	125	SuperMoto	00-03	**HF**
EXC	125	Enduro	99-03	**SI**
KTM				
EXE	125		00-00	**HF**
LC2	125		99-99	**HF**
RC	125		14-19	**LS**
SX	125		96-03	**RSI**
	200	Duke	12-17	**LS**
EXC	200	Enduro	99-03	**SI**
RC	200		14-19	**LS**
	250	Duke	14-15	**LS**
EXC	250	Enduro	99-03	**SI**
EXC	250	Enduro 4T	99-03	**SI**
RC	250		14-15	**LS**
SX	250		96-02	**RSI**
EXC	300	Enduro	99-03	**SI**
MX	360		96-97	**SI**
SX	360		96-97	**RSI**
XC	360		96-97	**SI**
EXC	380	Enduro	99-99	**SI**
MX	380		98-98	**SI**
SX	380		98-02	**RSI**
XC	380		98-03	**SI**
	390	Adventure	20-20	**LS**
	390	Duke	13-20	**LS**
RC	390		14-20	**LS**
EXC	400	Racing	00-03	**SI**
LC4-E	400	Enduro	99-02	**SI**
SC	400		99-00	**SI**
SX	400	Racing	00-02	**RSI**
SXC	400	Tiainen Replica	99-00	**SI**
	450	Rally	11-17	**SI**
EXC	520	Racing	00-02	**SI**
SX-F	520	Racing	00-02	**RSI**
EXC	525	Racing	03-03	**SI**
SX-F	525	Racing	03-03	**RSI**
SXC	540	Tiainen Replica	99-00	**SI**
LC4	620	Competition	99-02	**SI**
LC4	620	Competition SuperMoto	00-01	**HF**
LC4	620	RXC	95-95	**SI**
LC4	620	Supercompetition	01-01	**HF**
SC	620		99-00	**SI**
SX	620		95-99	**RSI**
LC4	625	SC Supermoto	02-04	**HF**
SMC	625		05-06	**HF**
SXC	625		03-04	**HF**
	640	Duke	03-06	**HF**
LC4	640	Adventure	99-07	**HF**
LC4	640	Supermoto	03-04	**HF**
LC4-E	640	Enduro	99-04	**HF**
LC4-E	640	Supermoto	99-02	**HF**
LC4	660	Rallye	01-03	**HF**
LC4	660	SM Factory Replica	02-02	**RSI**
SMC	660	Supermoto	03-07	**HF**
	690	Duke	08-11	**LS**
	690	Duke ABS	12-19	**LS**
	690	Duke R	10-11	**LS**
	690	Duke R	14-17	**LS**
	690	Enduro	08-14	**LS**
	690	Enduro R	09-21	**LS**
	690	SM	07-11	**LS**
	690	SMC	08-10	**LS**
	690	SMC R	14-20	**LS**
	690	Supermoto R	08-09	**LS**
	790	Duke	18-20	**LS**

Brake Pad 1:1 Drawings, Compounds, Fitments

Applications for this part number continues on following page.

Available compounds **HF • LS • RQ • CS • SI • RSI • H.HF • H.CT • H.LS** **SBS 675**

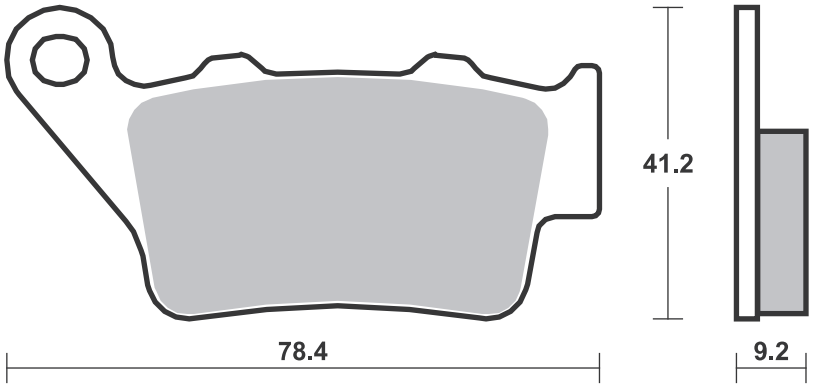

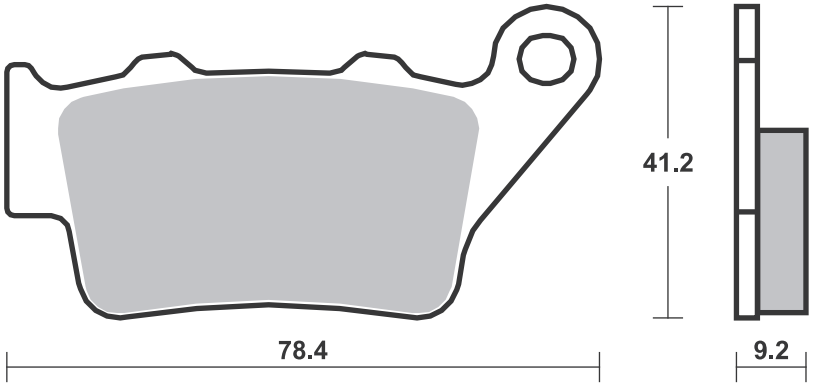

SBS 675 Recommended compound

KTM				
	890	Duke R	20-20	**LS**
	990	Super Duke	04-13	**LS**
	990	Super Duke R	09-13	**LS**
MAICO				
	250	Motocross/ Enduro	99-01	**SI**
	500	Motocross/ Enduro	99-99	**SI**
	500	Supermotard	99-99	**HF**
ROYAL ENFIELD				
	411	Himalayan	19-20	**HF**
	500	Bullet	20-20	**LS**
	500	Bullet Trials	20-20	**LS**
	500	Classic	19-19	**HF**
	535	Continental GT	14-17	**LS**
	650	Continental GT	20-20	**LS**
	650	Interceptor	19-20	**LS**
SWM				
	600	Superdual GT Pack	18-18	**LS**
	600	Superdual T	18-20	**LS**
	600	Superdual X	18-20	**LS**
	650	Superdual	15-18	**LS**
TM				
	80	Cross	96-00	**RSI**
MX	125		96-00	**RSI**
	250	E	95-00	**RSI**
EN	250	F Enduro	00-00	**SI**
MX	300		98-00	**RSI**
	320		96-97	**RSI**
	400	F	00-00	**RSI**
TRIUMPH				
	660	Street Triple S A2	17-20	**LS**
	675	Daytona R Triple	13-18	**LS**
	675	Daytona Triple	13-18	**LS**
	675	Street Triple	13-17	**LS**
	675	Street Triple R	13-17	**LS**
	675	Street Triple RX	15-16	**LS**
	765	Daytona Moto2	20-20	**LS**
	765	Street Triple R	17-20	**LS**
	765	Street Triple R Low	17-18	**LS**
	765	Street Triple RS	17-20	**LS**
	765	Street Triple S	17-20	**LS**
VERTEMATI				
C	500	Cross	02-04	**RSI**
E	501	Enduro	02-04	**SI**
S	501	Supermotard	02-04	**HF**
VICTORY				
	1200	Octane	17-17	**H.LS**
VOR				
	400	Cross	00-01	**RSI**
	400	Enduro	00-01	**SI**
EN	400		02-03	**SI**
MX	400		02-02	**RSI**
SM	400		02-02	**RSI**
EN	450		02-04	**SI**
MX	450		02-04	**RSI**
SM	450		02-04	**RSI**
	500	492 Enduro	99-99	**SI**
	500	492 Super Motard	00-01	**HF**
	500	495 Cross	99-99	**RSI**
EN	530		02-04	**SI**
MX	530		02-04	**RSI**
SM	530		02-04	**RSI**
YAMAHA				
WR	125	R, XY	09-16	**HF**
XT	660	R	04-11	**LS**
XT	660	X	04-13	**LS**
XT	660	Z Tenere	08-14	**LS**
XT	660	Z Tenere ABS	11-14	**LS**
XTZ	700	Tenere	19-21	**LS**
ZERO				
DS	ZF11.4		14-14	**LS**
DS	ZF12.5		15-15	**LS**
DS	ZF13.0		16-17	**LS**
DS	ZF8.5		14-14	**LS**
DS	ZF9.4		15-15	**LS**
DS	ZF9.8		16-17	**LS**
DSR	ZF13.0		16-17	**LS**
DSRBF	ZF14.4		19-21	**LS**
FX	ZF2.8		14-15	**LS**
FX	ZF3.3		16-17	**LS**
FX	ZF5.7		14-15	**LS**
FX	ZF6.5		16-17	**LS**
FXS	ZF3.3		16-17	**LS**
FXS	ZF6.5		16-17	**LS**
S	ZF11.4		14-14	**LS**
S	ZF12.5		15-15	**LS**
S	ZF13.0		16-17	**LS**
S	ZF8.5		14-14	**LS**
S	ZF9.4		15-15	**LS**
S	ZF9.8		16-17	**LS**
SR	ZF11.4		14-14	**LS**
SR	ZF12.5		15-15	**LS**
SR	ZF13.0		16-17	**LS**
SR/F	ZF14.4		19-21	**LS**
SR/S	ZF14.4		19-21	**LS**

SBS 676 Recommended compound

BRAKING				
Front Harley Davidson				
BUELL				
M2	1200	Cyclone	98-02	**HS**
S1	1200	Lightning	98-02	**HS**
S1	1200	Whitelightning	98-02	**HS**
S3	1200	Thunderbolt	98-02	**HS**
X1	1200	Lightning	01-02	**HS**
HHI				
6 Piston Caliper				
KAWASAKI				
ZX-7RR	750	Ninja	96-02	**HS**
MV AGUSTA				
	750	Brutale, Brutale S	01-05	**HS**
	750	F4 SPR	01-03	**HS**
	750	F4/F4S	99-02	**HS**
	910	Brutale	06-08	**HS**
	910	Brutale S	06-08	**HS**
	1000	F4 Mamba	04-06	**HS**
	1000	F4 Tamburini	04-06	**HS**
	1000	F4S	04-06	**HS**

Available compounds **HF • LS • RQ • CS • SI • RSI • H.HF • H.CT • H.LS** **SBS 675**

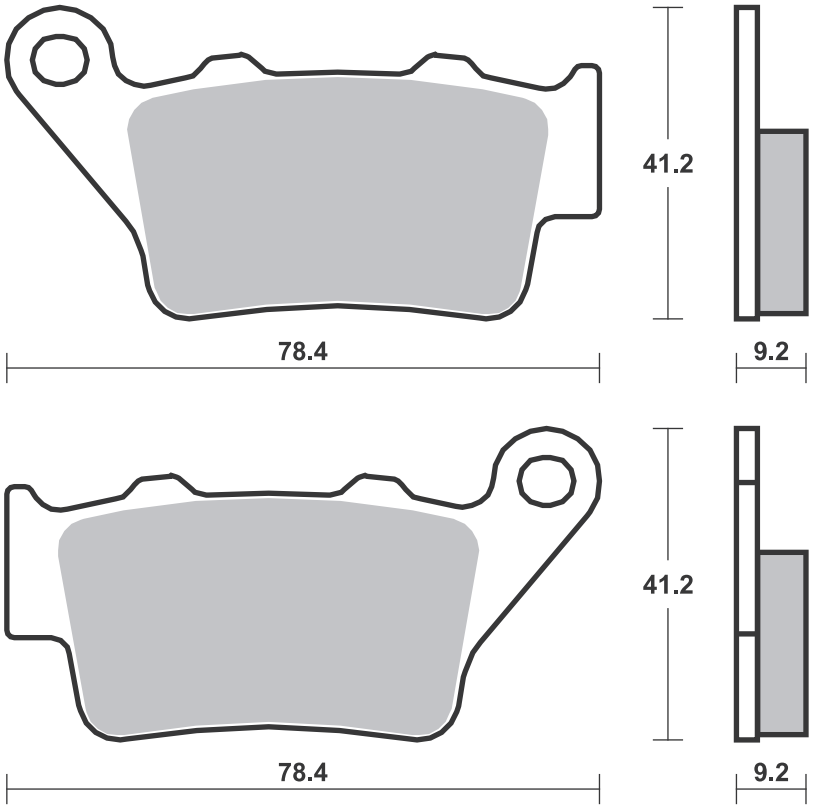

Available compounds **HF • HS • DC • RST • H.HF • H.CT • H.HS** **SBS 676**

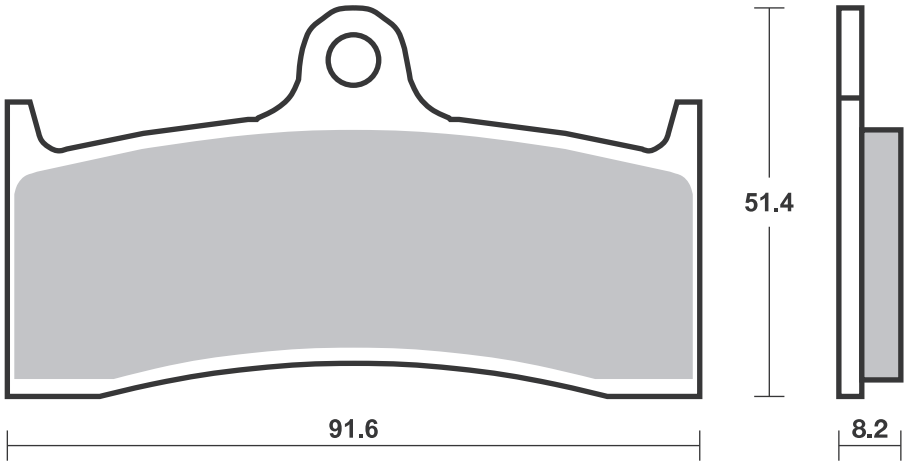

Dimensions in mm / Dimensions en mm • 1” = 25.4 mm , 1 mm = 0.04”

SBS 678 Recommended compound

HHI				
4 Piston Caliper				
INDIAN				
	Chief	01 - 08	**H.HS**	**H.LS**
	Scout	01 - 08	**H.HS**	**H.LS**
MOTOR FACTORY				
4 Piston Caliper front/rear				
PERFORMANCE MACHINE				
125 X 4R				
125 X 4RSPH				
137 X 4B				
4 Piston Vintage Caliper				

SBS 679 Recommended compound

HARLEY DAVIDSON				
FXB	Series	74 - 77	**H.HF**	
FXE	Series	74 - 77	**H.HF**	
XL	Series	74 - 77	**H.HF**	

Available compounds **HF • HS • LS • DC • H.HF • H.CT • H.HS • H.LS** **SBS 678**

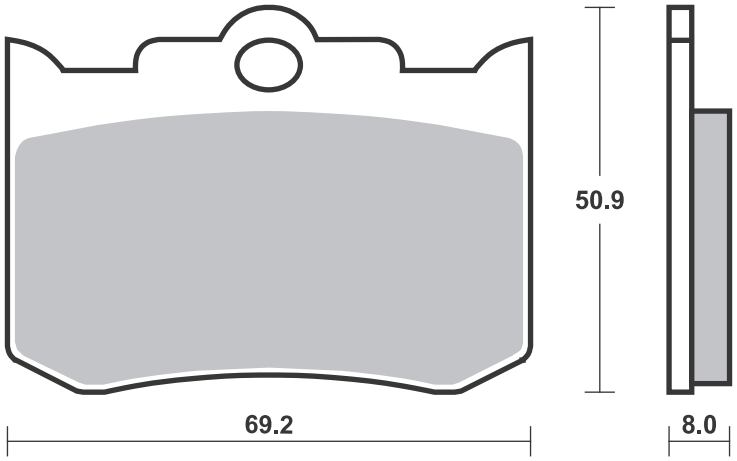

Available compounds **H.HF** **SBS 679**

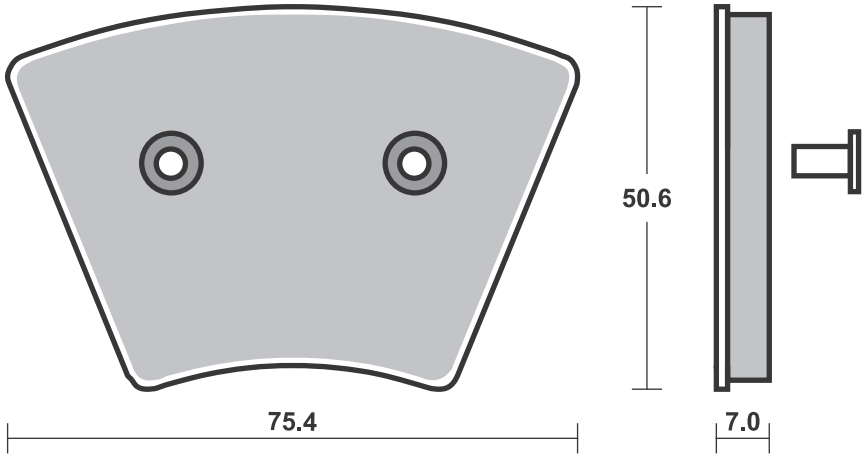

SBS 681 Recommended compound

APRILIA				
	650 Pegaso	92-94	**HF**	
MZ				
	660 (MUZ) Baghira	96-00	**HF**	
	660 (MUZ) Black Panther	00-06	**HF**	
	660 (MUZ) Mastiff	96-06	**HF**	
	660 (MUZ) Street Moto	00-06	**HF**	
	660 (MUZ) Super Moto	07-07	**HF**	

SBS 682 Recommended compound

YAMAHA				
GTS	1000	93-99	**HF**	

SBS 683 Recommended compound

PERFORMANCE MACHINE				
112 X 6RSB				
112 X 6SSB				
125 X 6QC				
TRIUMPH				
	900 Daytona Super III	94-98	**HS**	
YAMAHA				
YZF	750 R, SP	93-97	**HS**	
FZR	1000	94-95	**HS**	

Available compounds **HF** **SBS 681**

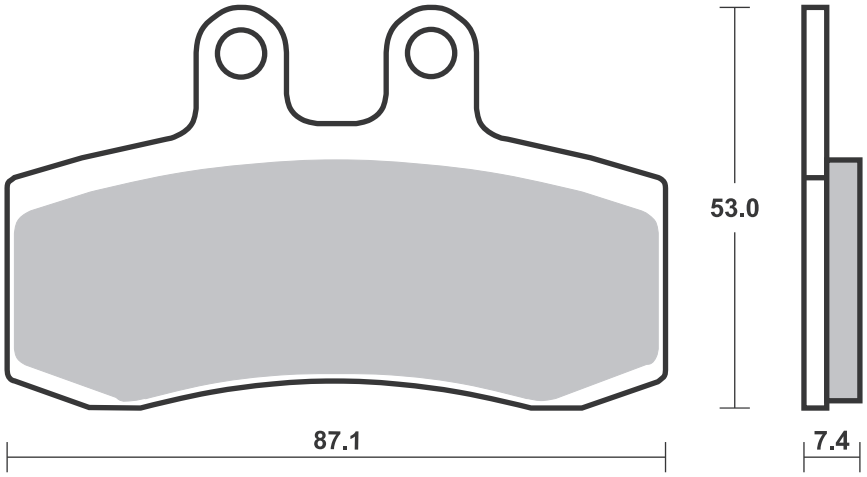

Available compounds **HF** **SBS 682**

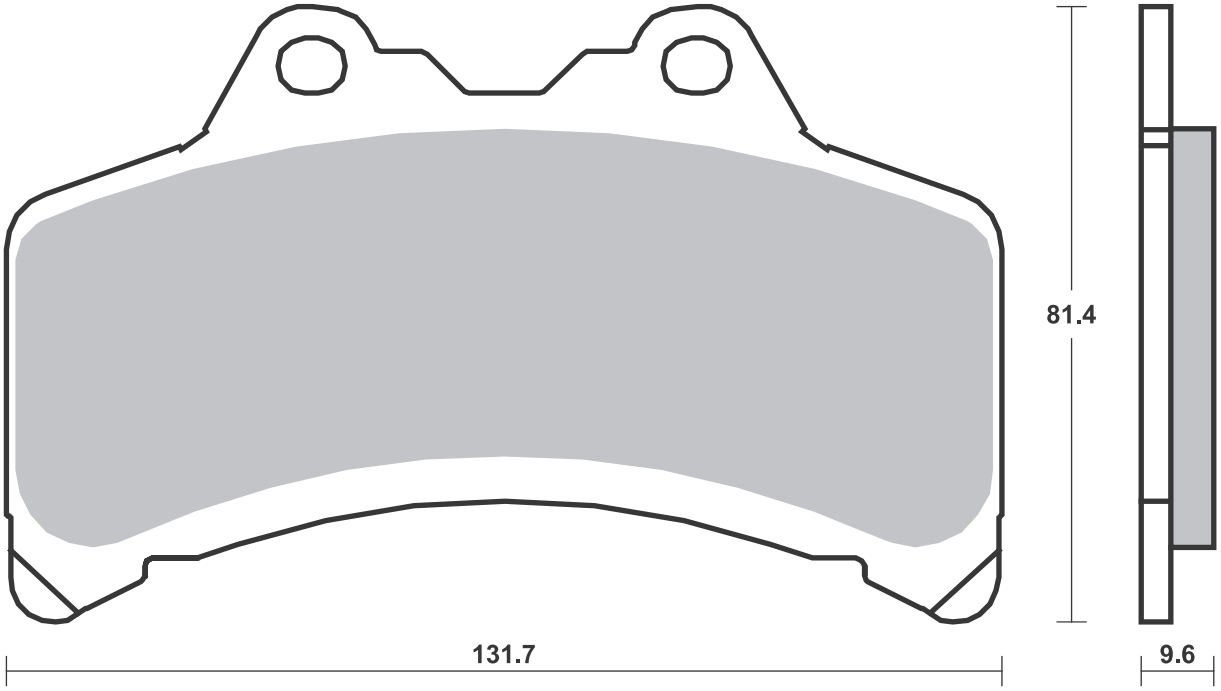

Available compounds **HF • HS • RST • H.HF • H.CT • H.HS** **SBS 683**

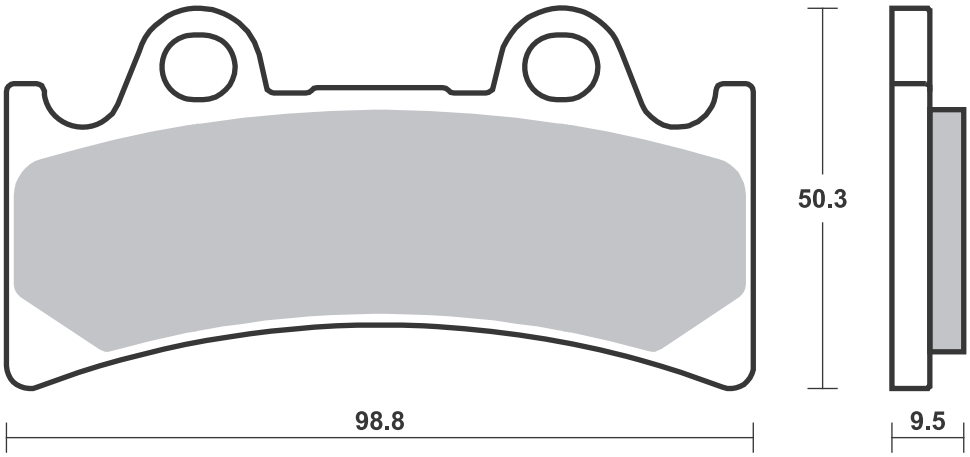

Dimensions in mm / Dimensions en mm • 1” = 25.4 mm , 1 mm = 0.04”

SBS 684 Recommended compound





MZ			
	660 (MUZ) Baghira	96-00	**HF**
	660 (MUZ) Black Panther	00-06	**HF**
	660 (MUZ) Mastiff	96-06	**HF**
	660 (MUZ) Street Moto	00-06	**HF**
	660 (MUZ) Super Moto	07-07	**HF**
SACHS			
	500 MadAss	05-08	**HF**

SBS 685 Recommended compound





HONDA				
CBR	1000 F, FP	93-99	**HS**	**LS**

Available compounds **HF** **SBS 684**

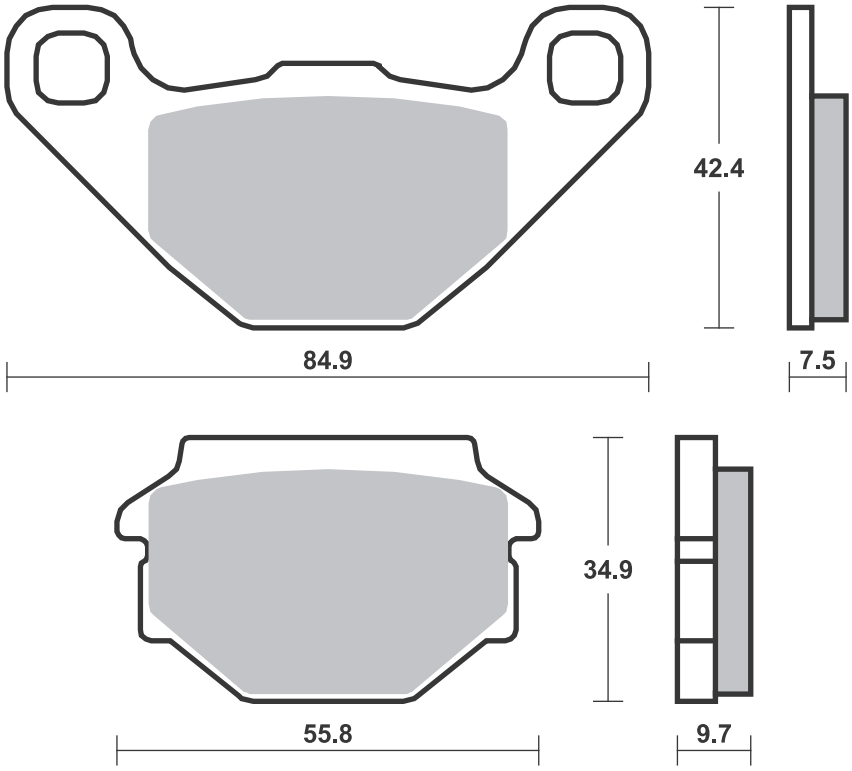

Available compounds **HF • HS • LS** **SBS 685**

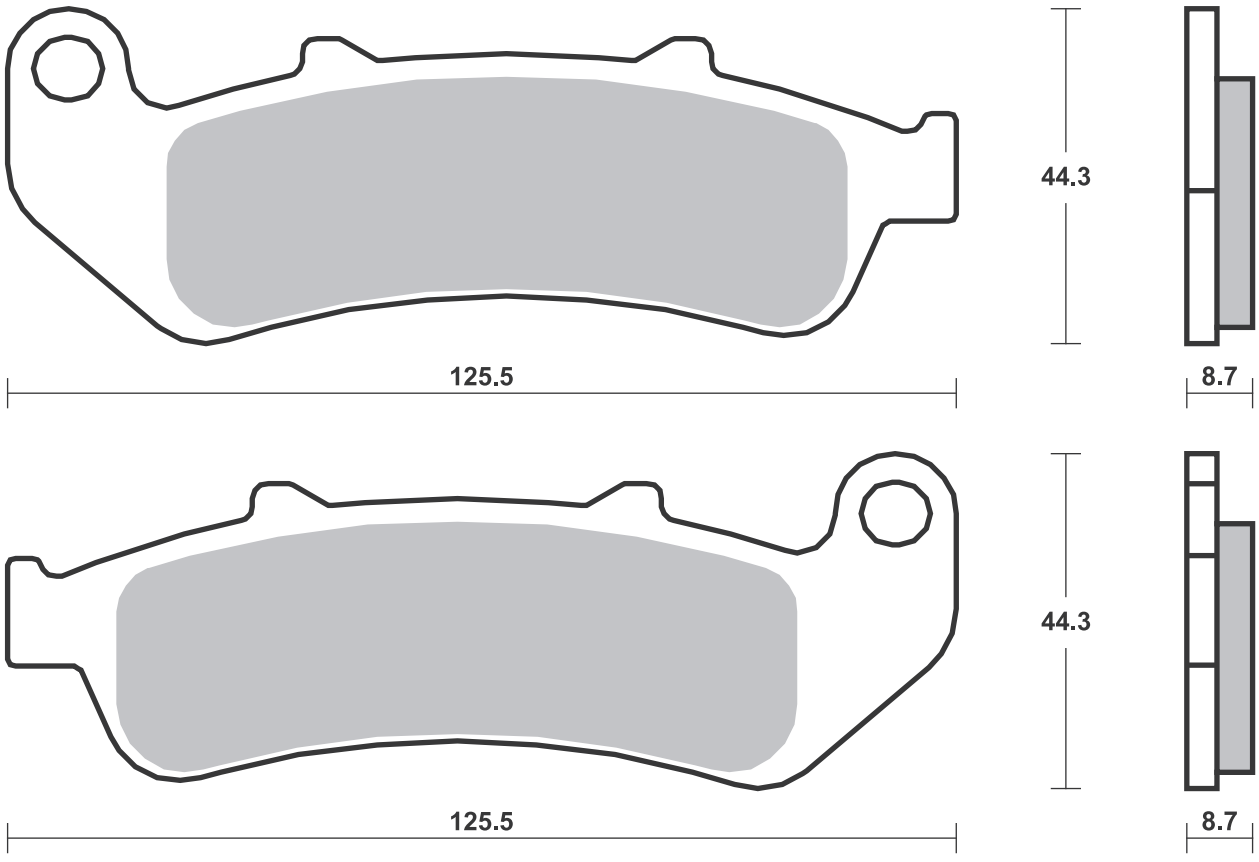

Dimensions in mm / Dimensions en mm • 1” = 25.4 mm , 1 mm = 0.04”

SBS 686 Recommended compound

JAYBRAKE				
4 Piston Caliper A4 P/L				
4 Piston J-Four Caliper				
KAWASAKI				
ZX-6R	600	Ninja	98-01	**HS**
ZX-6R	636	Ninja	02-02	**HS**
ZX-7R	750	Ninja	96-03	**HS**
ZX-9R	900	Ninja	96-01	**HS**
ZRX	1100		96-00	**HS**
ZRX	1200		01-04	**HS**
ZRX	1200	R	01-08	**HS**
ZRX	1200	S	01-07	**HS**
ZX-12R	1200	Ninja	00-03	**HS**
VN	1500	Mean Streak	02-03	**HS**
VN	1600	Mean Streak	04-04	**HS**
SUZUKI				
GSX-R	750		94-99	**HS**
GSX-R	1000		01-02	**HS**
TL	1000	RW	98-02	**HS**
GSX-R	1100		93-97	**HS**
GSF	1200	Bandit	01-05	**HS**

SUZUKI				
GSF	1200	S Bandit	01-05	**HS**
GSX-R	1300	Hayabusa	99-07	**HS**
GSX	1400		02-07	**HS**
VZ	1600	Marauder	04-04	**HS**

SBS 687 Recommended compound

KAWASAKI				
	400	Ninja R	11-11	**LS**
ZR	400	Zephyr	97-01	**LS**
ZR	550	Zephyr	93-99	**LS**
ZX-6R	600	(Ninja ZX6)	93-97	**LS**
ZX-6R	600	(Ninja ZX6R)	95-97	**LS**
ZX-6R	600	Ninja	98-01	**LS**
ZX-6R	600	Ninja	07-17	**LS**
ZX-6RR	600	Ninja	03-06	**LS**
ZX-6R	636	Ninja	02-06	**LS**
	650	R Ninja	06-08	**LS**
KLE	650	Versys	07-14	**LS**
Z	750		04-06	**LS**
Z	750	S	05-06	**LS**
ZX-9R	900	Ninja	94-01	**LS**
	1000	Ninja sx	20-20	**LS**
Z	1000	ABS	15-19	**LS**
Z	1000	Ninja	14-16	**LS**
Z	1000	SE	14-16	**LS**
Z	1000	SX	11-19	**LS**
ZX-10R	1000	Ninja	04-10	**LS**
GPZ	1100	(ZX 1100)	95-99	**LS**

Available compounds **HF • HS • DC • RST • H.HF • H.CT • H.HS** **SBS 686**

HF / HS - Th. 8.0
RST / DC - Th. 9.5

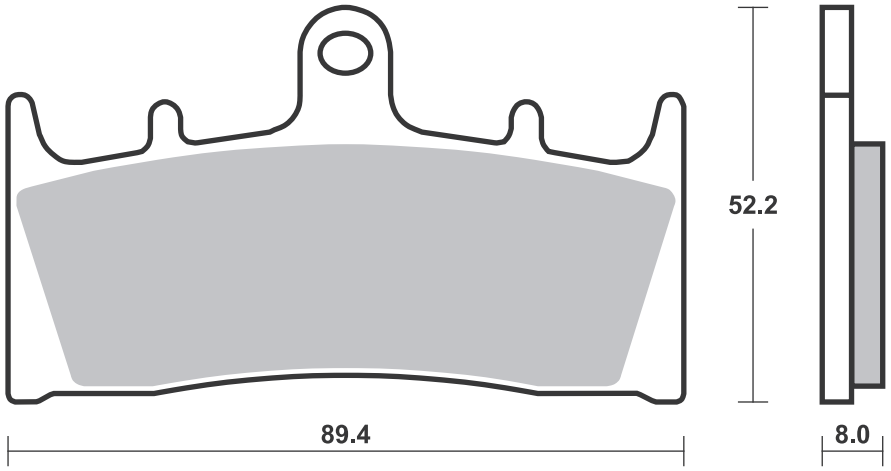

Available compounds **HF • LS • RQ** **SBS 687**

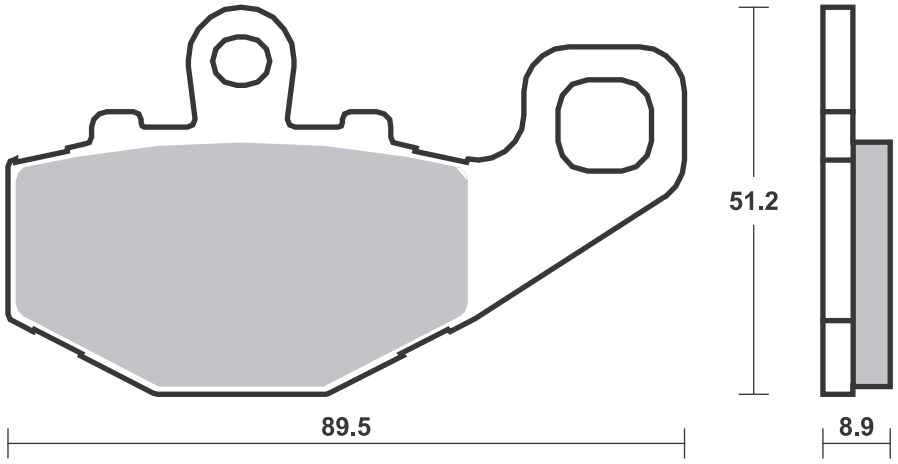

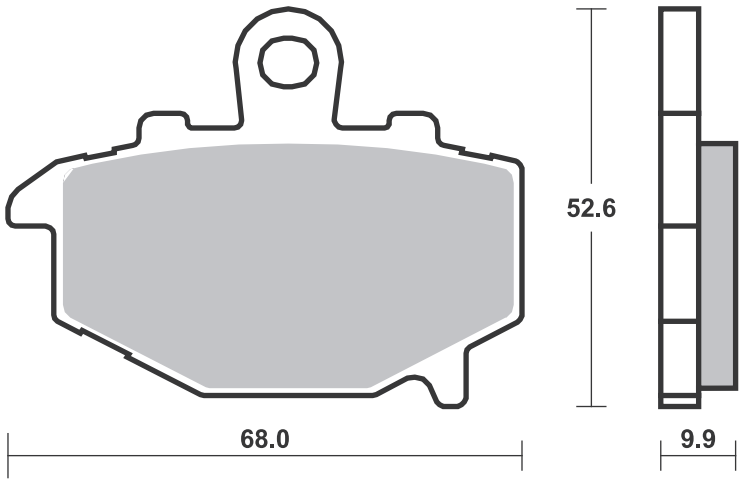

SBS 688 Recommended compound

CF MOTO					
	125	Papio	17-17	**HF**	
HONDA					
NSF	100		06-06	**DC**	
NSR	150		02-02	**HF**	
CBF	250		04-08	**HF**	
CB	300		10-10	**HF**	
KYMCO					
	125	K-Pipe	13-15	**HF**	
TGB					
	50	Buffalo	03-03		**HF**

SBS 691 Recommended compound

KEEWAY					
	250	Supershadow	06-09	**HF**	
MZ					
	1000	(MUZ) S	01-02		**HF**
YAMAHA					
XV	250	Route 66	95-97	**HF**	
XV	250	S Virago	95-07	**HS**	
XVS	250	V-Star	08-14	**HS**	
FZ6	600		04-08	**HS**	
FZ6	600	Fazer	04-08	**HS**	
FZ6R	600		09-14	**HS**	
XV	1100	Virago	99-99	**HS**	
XVS	1100	V-Star	99-06	**HS**	
XVS	1100	V-Star Classic	00-06	**HS**	
XVS	1300	A Midnight Star	07-11	**HS**	
XVS	1300	Custom	14-16	**HS**	
XVS	1300	V-Star	07-14	**HS**	
XVS	1300	V-Star Deluxe	07-14	**HS**	
XVS	1300	V-Star Tourer	07-14	**HS**	

Available compounds **HF • DC** **SBS 688**

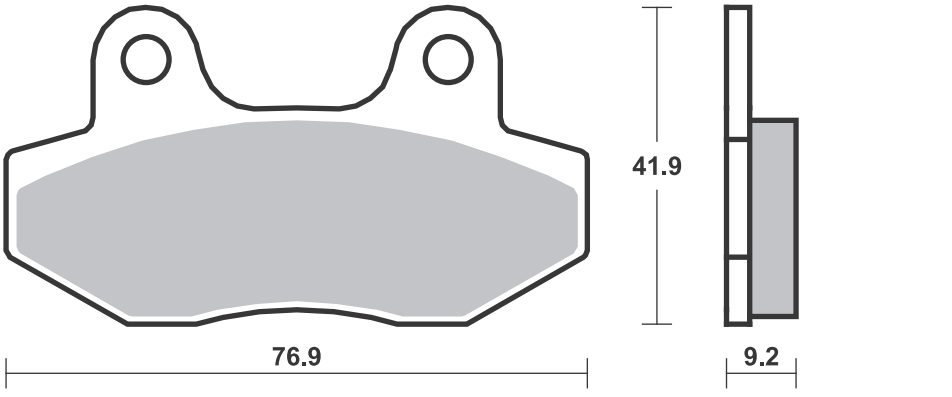

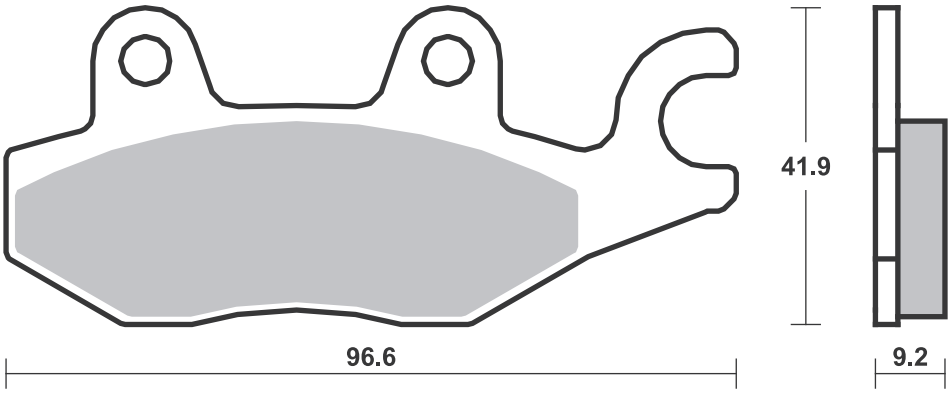

Available compounds **HF • HS** **SBS 691**

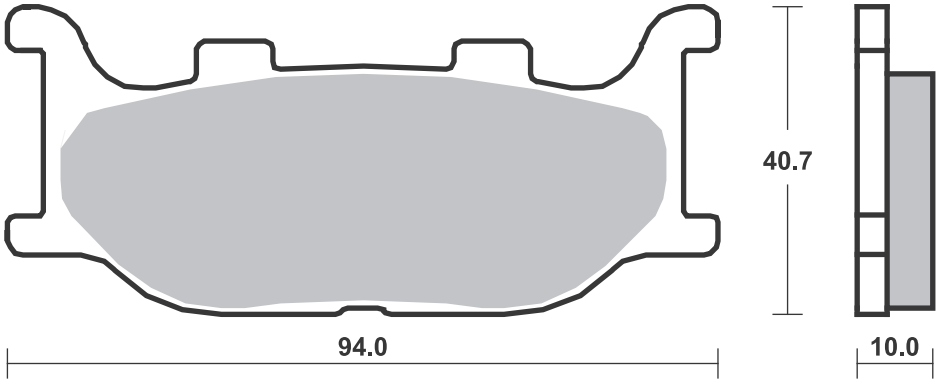

SBS 692 Recommended compound

APRILIA				
	650 Pegaso	95-00		**HF**
BUELL				
	all models	94-97		**HF**
RS	1200	12-12		**HF**
CAGIVA				
	125 Cross	86-86		**SI**
WMX	125	89-90	**SI**	**SI**
WMX	250	89-90		**SI**
HUSQVARNA				
CR/WR	125	91-91		**SI**
WR	240	87-91		**SI**
CR	250	91-91		**SI**
WR	260	90-93		**SI**
TC	610 Cross	91-91		**SI**
TE	610	91-95		**SI**
KTM				
MX	125	89-90		**SI**
MX	125	92-93		**SI**
MX	250	89-90		**SI**
MX	250	92-93		**SI**
MX	500	89-93		**SI**

SBS 694 Recommended compound

APRILIA				
MXV	450	09-13	**RSI**	
RXV	450	06-13	**SI**	
RXV	550	06-13	**SI**	
BETA				
RR	125	18-19	**SI**	
RR	250	05-09	**SI**	
	300 Crosstrainer	15-15	**SI**	
RR	300	13-19	**SI**	
RR	350 Efi	15-15	**SI**	
RR	350 Efi Racing	15-15	**SI**	
RR	350 Enduro	12-14	**SI**	
RR	390	15-19	**SI**	
RR	400 Enduro	05-05	**SI**	
RR	430	15-19	**SI**	
RR	430 Racing	15-19	**SI**	
RR	450 Cross Country	12-12	**SI**	
RR	450 Enduro	05-07	**SI**	
RR	480	15-19	**SI**	
RR	480 Racing	15-19	**SI**	
RR	498 Enduro	12-14	**SI**	
RR	525 Enduro	05-13	**SI**	
BIMOTA				
BBX	300 Enduro	12-12	**SI**	
BBX	508 Enduro	12-12	**SI**	
BRAKING				
Front Cross				
CANNONDALE				
MX	400	00-03	**RSI**	
C	440 R	03-03	**RSI**	
E	440 , A, R	03-03	**RSI**	
X	440	03-03	**RSI**	
CPI				
	125 Sahel	02-02	**HF**	
GAS GAS				
	125 Enducross	93-93	**SI**	
EC	125	00-06	**SI**	
MC	125	03-13	**RSI**	
EC	200	00-09	**SI**	
EC	200	17-17	**SI**	
EC	200 Hobby	07-16	**SI**	
XC	200	18-19	**SI**	
EC	250	00-20	**SI**	
EC	250 Enduro GP 18	18-19	**SI**	
EC	250 fse	02-11	**SI**	
MC	250	00-13	**SI**	
XC	250	17-19	**SI**	
EC	300	00-20	**SI**	
EC	300 Enduro GP 18	18-19	**SI**	
GAS GAS				
XC	300	18-19	**SI**	
	400 Pampera	06-09	**SI**	
EC	400 fse	02-02	**SI**	
EC	450 fse	03-15	**SI**	
EC	450 FSR	07-16	**SI**	
EC	515 fsr	08-16	**SI**	
HONDA				
CR	125 R	95-07	**RSI**	
CRE	125	02-07	**SI**	
CRF	125 F	14-21	**SI**	
XLR	125 R	98-01	**HF**	
XR	125 L	03-07	**HF**	
CRF	150 F	03-06	**SI**	
CTX	200	04-06	**SI**	
CRF	230	04-09	**SI**	
CRF	230 L	08-10	**SI**	
CRF	230 M	09-12	**SI**	
SL	230	97-01	**HF**	
CR	250 R	95-07	**RSI**	
CRE	250	02-07	**SI**	
CRF	250 R	04-09	**RSI**	
CRF	250 R Efi	10-21	**RSI**	
CRF	250 X	04-19	**SI**	
XR	250 L	93-97	**HF**	
XR	250 S	96-00	**HF**	

Applications for this part number continues on following page.

Available compounds **HF • SI • RSI** **SBS 692**

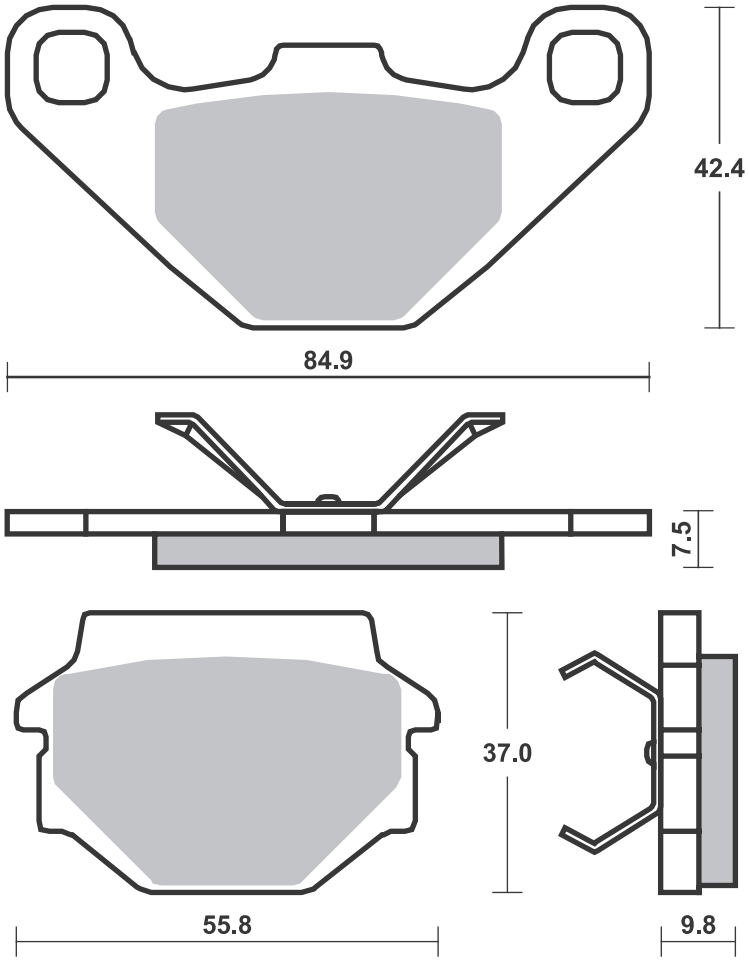

Available compounds **HF • HS • CS • SI • RSI** **SBS 694**

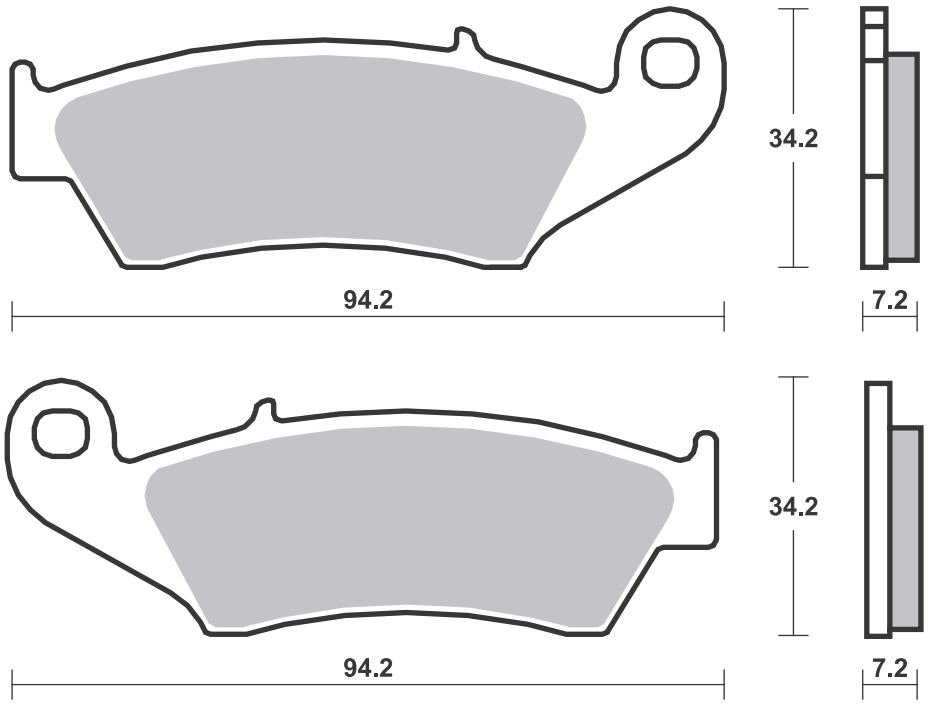

Dimensions in mm / Dimensions en mm • 1” = 25.4 mm , 1 mm = 0.04”

SBS 694 Recommended compound

HONDA				
XR	400 R	96-04	**SI**	
XR	440 R	00-03	**SI**	
CRE	450 F	02-06	**SI**	
CRF	450 Efi	09-12	**RSI**	
CRF	450 L	19-21	**RSI**	
CRF	450 R	02-08	**RSI**	
CRF	450 R Efi	13-21	**RSI**	
CRF	450 RX Efi	17-21	**SI**	
CRF	450 X	05-21	**SI**	
TRX	450 R	04-09	**SI**	
CR	500 R	95-01	**RSI**	
XR	600 R	93-00	**SI**	
XR	650 L	93-18	**HF**	
XR	650 R	00-11	**SI**	
TRX	700 XX	08-12	**SI**	
KAWASAKI				
KX	125	94-08	**RSI**	
KDX	200	94-99	**SI**	
KDX	220 R	97-05	**SI**	
KLX	250	93-96	**SI**	
KLX	250	98-07	**SI**	
KX	250	94-08	**RSI**	
KX-F	250	04-10	**RSI**	
KX-F	250 DFI	11-21	**RSI**	
KLX	300 R	97-07	**SI**	
KLX	400 R	03-04	**SI**	
KLX	400 SR	03-04	**HF**	
KLX	450 R	07-19	**SI**	
KX-F	450	06-08	**RSI**	
KX-F	450 DFI	09-21	**RSI**	
KX	500	94-04	**RSI**	
KLX	650	93-96	**SI**	
KLX	650 R	93-95	**SI**	
KLX	650 R D1	96-96	**SI**	
SUZUKI				
RM	125	96-09	**RSI**	
DR-Z	250	01-07	**SI**	
RM	250	96-09	**RSI**	
RMX	250	96-98	**RSI**	
RMX	250 X-K1	99-99	**SI**	

SUZUKI				
RM-Z	250	04-21	**RSI**	
DR	350 V, W, X	97-99	**SI**	
DR-Z	400 S /E	00-12	**HF**	
DR-Z	400 SM	05-10	**RSI**	
RMX	450 Z Efi	10-18	**SI**	
RM-Z	450	05-21	**RSI**	
DR	650 SE T-W	96-99	**HF**	
YAMAHA				
WR	125	98-02	**SI**	
YZ	125	98-07	**RSI**	
WR	250	98-02	**SI**	
WR	250 F	01-13	**SI**	
WR	250 F Efi	15-17	**SI**	
WR	250 R	08-15	**HS**	
YZ	250	98-07	**RSI**	
YZ	250 F	01-06	**RSI**	
WR	400 F	98-00	**SI**	
YZ	400	98-98	**RSI**	
YZ	400 F	99-99	**RSI**	
WR	426 F	01-02	**SI**	
YZ	426 F	00-02	**RSI**	
WR	450 F	03-15	**SI**	
YZ	450 F	03-07	**RSI**	
ZERO				
DS	ZF11.4	13-14	**HS**	
DS	ZF8.5	13-14	**HS**	
FX	ZF2.8	13-14	**HS**	
FX	ZF5.7	13-14	**HS**	
MX	ZF2.8	13-13	**RSI**	
MX	ZF5.7	13-13	**RSI**	
S	ZF11.4	13-14	**HS**	
S	ZF8.5	13-14	**HS**	
SR	ZF11.4	14-14	**HS**	
XU	ZF2.8	13-13	**HS**	
XU	ZF5.7	13-13	**HS**	

SBS 695 Recommended compound

APRILIA				
SXV	450 Van den			
	Bosch Rep.	08-10	**RST**	
SXV	550 Van den			
	Bosch Rep.	08-10	**RST**	
BREMBO RACING CALIPERS				
GP X10.48.13/14, racing				

Available compounds **HF • HS • CS • SI • RSI** **SBS 694**

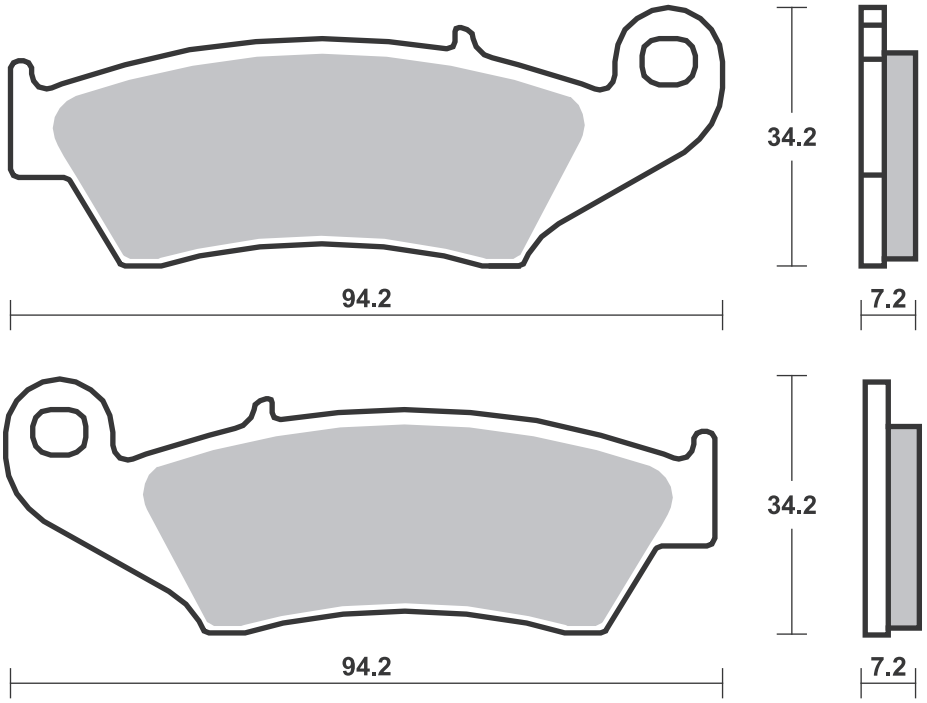

Available compounds **DC • RST • DS-1 • DS-2** **SBS 695**

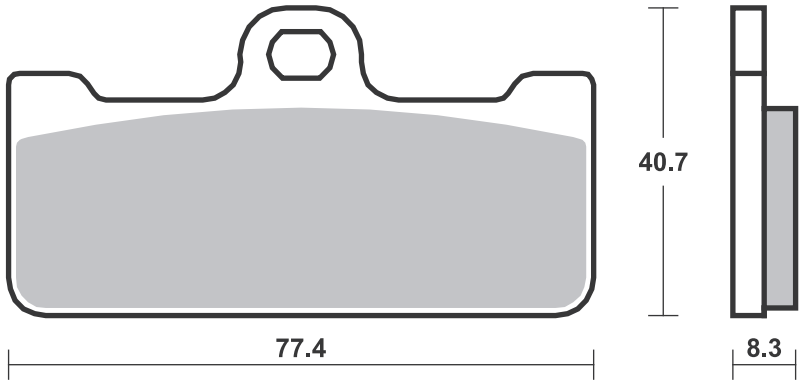

SBS 698 Recommended compound

A.P. RACING CALIPERS	
CP-2868-8E0/9E0	

SBS 699 Recommended compound

JAWA			
350	93-95	**HF**	

Available compounds **HF** **SBS 698**

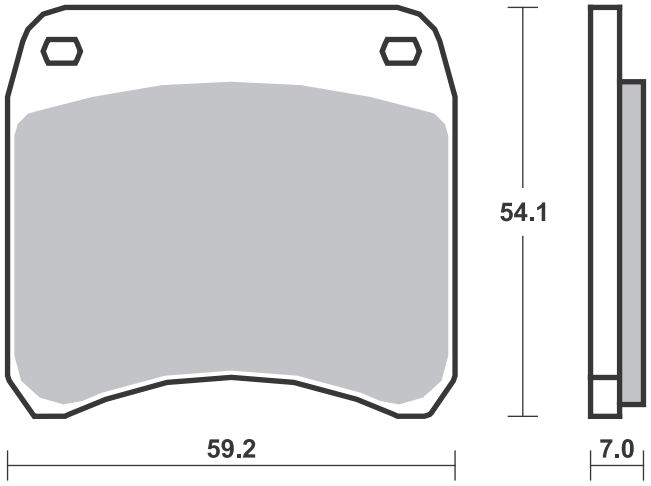

Available compounds **HF** **SBS 699**

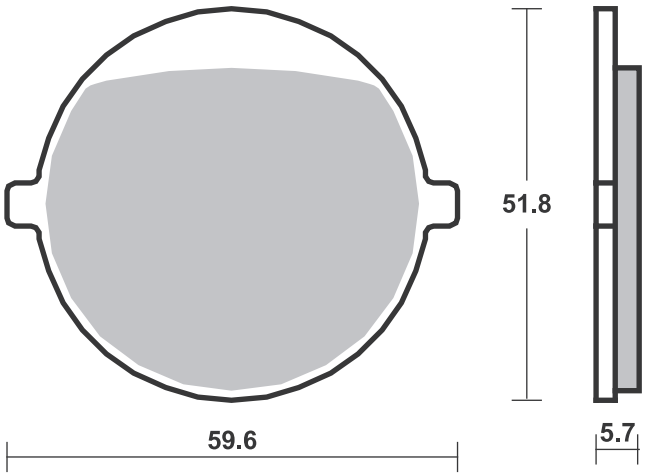

SBS 700 Recommended compound

HONDA					
CBR	250	RR	17-21	**HS**	
CBR	300	F	14-16	**HS**	
CBR	300	F ABS	14-17	**HS**	
CBR	300	R	14-21	**HS**	
CMX	300	Rebel	17-18	**HS**	
CB	500	F	13-21	**HS**	
CB	500	X	13-21	**HS**	
CBR	500	R	13-21	**HS**	
CMX	500	Rebel	17-21	**HS**	
CMX	500	Rebel S	20-20	**HS**	
CBR	650	F ABS	14-20	**HS**	
CTX	700		14-18	**HS**	
CTX	700	D ABS w/DCT	13-15	**HS**	
CTX	700	N	14-18	**HS**	
CTX	700	ND ABS w/DCT	14-15	**HS**	
NM4	700	Vultus ABS w/DCT	15-15	**HS**	
NC	750	D Integra	14-19	**HS**	
NC	750	S w/DCT	14-19	**HS**	
NC	750	X w/DCT	14-19	**HS**	
NC	750	XAE	14-19	**HS**	
VT	750	Black Widow	01-03	**HS**	
VT	750	C2 Shadow A.C.E.	97-03	**HS**	
VT	750	C2 Shadow Spirit	07-11	**HS**	
VT	750	C2B	11-18	**HS**	
VT	750	C2B Phantom	10-18	**HS**	
VT	750	C4 Shadow	04-05	**HS**	

HONDA					
VT	750	RS	11-13	**HS**	
VT	750	S	11-12	**HS**	
VT	750	Shadow Aero	13-18	**HS**	

SBS 701 Recommended compound

SUZUKI				
RF	900	RR,RS,RS2,T,V	94-97	**LS**

Available compounds **HF • HS • SP • DC • RST • DS-1 • DS-2** **SBS 700**

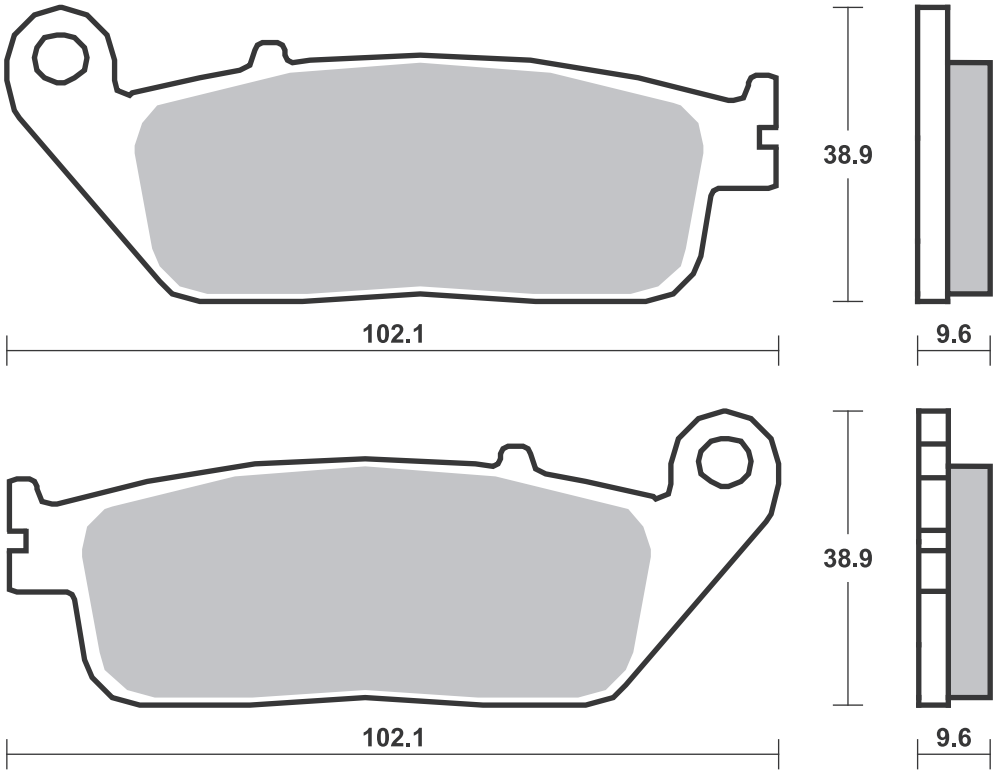

Available compounds **HF • LS** **SBS 701**

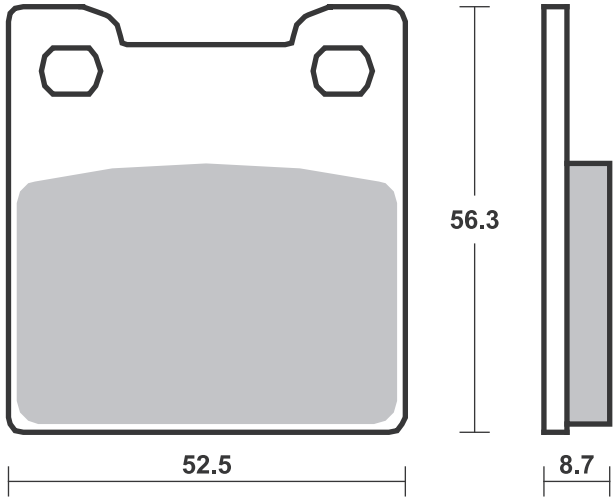

SBS 702 Recommended compound

KAWASAKI					
KLX	125	L	03-06	**SI**	
SUZUKI					
RM	80		96-01	**RSI**	
RM	85		02-04	**RSI**	
DR-Z	125	L	03-20	**SI**	

SBS 703 Recommended compound

BMW					
R	850	C	99-01	**HS**	
R	850	GS	99-07	**HS**	
R	850	R	96-02	**HS**	
R	850	RT	96-01	**HS**	
R	1100	GS	99-99	**HS**	
R	1100	R Cast wheels	99-01	**HS**	
R	1100	R Spoke wheels	99-06	**HS**	
R	1100	RT Cast wheels	95-01	**HS**	
R	1100	RT Spoke wheels	95-01	**HS**	
R	1100	S	99-00	**HS**	
R1100	1100	GS	94-01	**HS**	
R1100	1100	RS	94-01	**HS**	
R	1150	GS	00-01	**HS**	
K	1200	LT	99-00	**HS**	
K	1200	RS	97-00	**HS**	
R	1200	C	98-02	**HS**	

Available compounds **HF • CS • SI • RSI** **SBS 702**

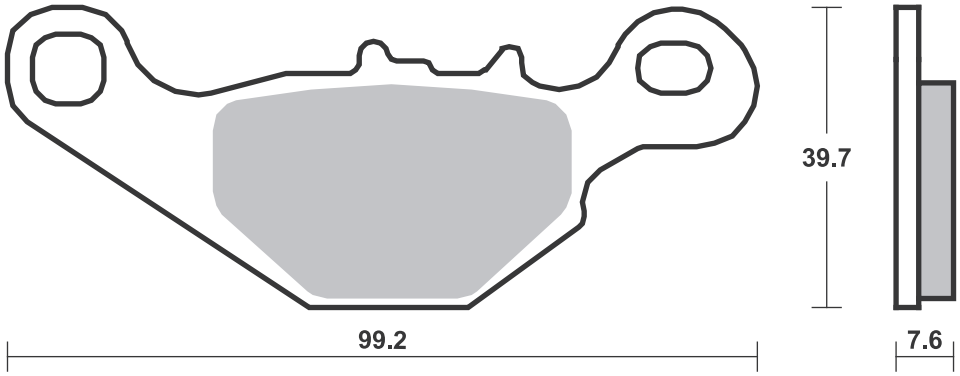

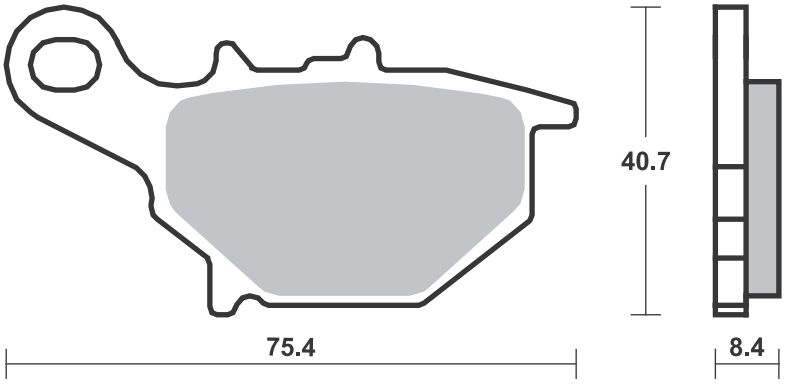

Available compounds **HF • HS** **SBS 703**

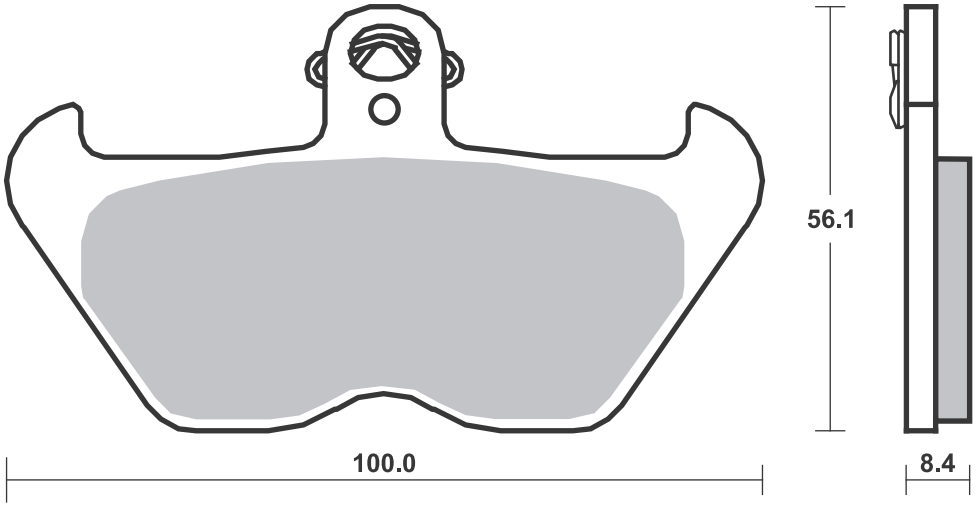

SBS 704 Recommended compound

KAWASAKI					
	400	Ninja R	11-11	**HS**	
	650	R Ninja	06-08	**HS**	
KLE	650	Versys	07-14	**HS**	
W	650		99-05	**HF**	
Z	750		04-06	**HS**	
Z	750	S	05-06	**HS**	
ZR	750	Zephyr	96-97	**HS**	
ZR-7S	750		01-04	**HS**	**LS**
ZR-7S	750		01-04		**LS**
VN	800	Vulcan Drifter	99-03		**LS**
W	800		11-16	**HS**	
W	800	Cafe	19-19	**HS**	
W	800	Street	19-19	**HS**	
KLV	1000		04-07	**HS**	
KZ	1000	Police	02-03	**HS**	
GPZ	1100	(ZX 1100)	95-99	**HS**	
VN	1500	Vulcan Drifter	99-02		**LS**
VN	1500	Vulcan Nomad	98-01	**HS**	
VN	1500	Vulcan Nomad			
		Fi	00-04	**HS**	
VN	1600	Nomad	05-05	**HS**	
VN	1600	Vulcan Classic	03-08	**HS**	
VN	1700	Voyager			
		Vaquero	09-14	**HS**	
VN	1700	Vulcan Classic	09-14	**HS**	
VN	1700	Vulcan Nomad	09-16	**HS**	

SUZUKI					
RV	125	VanVan	03-18	**HF**	
RV	200	VanVan	16-19	**HF**	
GS	500	F	04-08	**HS**	
GSF	600	Bandit /			
		S Bandit	00-04	**HS**	
GSX	600	FW	98-04	**HS**	
DL	650	V-Strom	04-20	**HS**	
DL	650	V-Strom XT	15-20	**HS**	
GSF	650	Bandit /			
		S Bandit	05-05	**HS**	
GSF	650	Bandit /			
		S Bandit ABS	06-06	**HS**	
SFV	650	Gladius	09-16	**HS**	
SV	650		16-18	**HS**	
SV	650	,S	99-12	**HS**	
SV	650	,S	03-12	**HS**	
SV	650	X	18-18	**HS**	
GSR	750		11-16	**HS**	
GSX	750		98-08	**HS**	
GSX	750	FW	98-02	**HS**	
GSX-S	750		15-16	**HS**	
GSX-S	750	Z	15-16	**HS**	
C50	800	Boulevard	05-18	**HS**	
M50	800	Boulevard	05-18	**HS**	
VL	800	Intruder LC			
		Volusia	01-04	**HS**	
VZ	800	Marauder	97-04	**HS**	
DL	1000	V-Strom	02-13	**HS**	

SUZUKI					
GSX	1100	G	96-98	**HS**	
C90	1500	Boulevard	05-18	**HS**	
M90	1500		09-18	**HS**	
VL	1500	Intruder LC	02-02	**HS**	

SBS 705 Recommended compound

KAWASAKI					
	400	Ninja R	11-11	**HS**	
	650	R Ninja	06-08	**HS**	
KLE	650	Versys	07-14	**HS**	
KLR	650		95-04	**HS**	
Z	750		04-06	**HS**	
Z	750	S	05-06	**HS**	
ZR	750	Zephyr	96-97	**HS**	
ZR-7S	750		01-04	**HS**	
VN	800	Vulcan Classic	96-06	**HS**	
VN	800	Vulcan Drifter	99-03	**HS**	
VN	900	Vulcan Classic	06-16	**HS**	
VN	900	Vulcan Classic			
		SE	11-16	**HS**	
VN	900	Vulcan			
		Custom	07-16	**HS**	
KLV	1000		04-07	**HS**	
KZ	1000	Police	02-03	**HS**	
GPZ	1100	(ZX 1100)	95-99	**HS**	
VN	1500	Vulcan Classic	97-99	**HS**	
VN	1500	Vulcan Classic			
		Fi	00-04	**HS**	
VN	1500	Vulcan Drifter	99-02	**HS**	
VN	1500	Vulcan Nomad	98-01	**HS**	
VN	1500	Vulcan Nomad			
		Fi	00-04	**HS**	
VN	1600	Nomad	05-05	**HS**	
VN	1600	Vulcan Classic	03-08	**HS**	
VN	1700	Voyager			
		Vaquero	09-14	**HS**	
VN	1700	Vulcan Classic	09-14	**HS**	
VN	1700	Vulcan Nomad	09-16	**HS**	

SUZUKI					
TU	250	X	09-19	**HF**	
GSF	600	Bandit /			
		S Bandit	00-04	**HS**	
GSX	600	FW	98-04	**HS**	
DL	650	V-Strom	04-20	**HS**	
DL	650	V-Strom XT	15-20	**HS**	
GSF	650	Bandit /			
		S Bandit	05-05	**HS**	
GSF	650	Bandit /			
		S Bandit ABS	06-06	**HS**	
SFV	650	Gladius	09-16	**HS**	
SV	650		16-18	**HS**	
SV	650	,S	99-12	**HS**	
SV	650	,S	03-12	**HS**	
SV	650	,S ABS	07-18	**HS**	
SV	650	X	18-18	**HS**	
GSR	750		11-16	**HS**	
GSX	750		98-08	**HS**	
GSX	750	FW	98-02	**HS**	
GSX-S	750		15-16	**HS**	
GSX-S	750	Z	15-16	**HS**	
DL	1000	V-Strom	02-13	**HS**	
GSX	1100	G	96-98	**HS**	
C90	1500	Boulevard	05-18	**HS**	
M90	1500		09-18	**HS**	
VL	1500	Intruder LC	02-02	**HS**	

Available compounds **HF • HS • LS • SP • RST** **SBS 704**

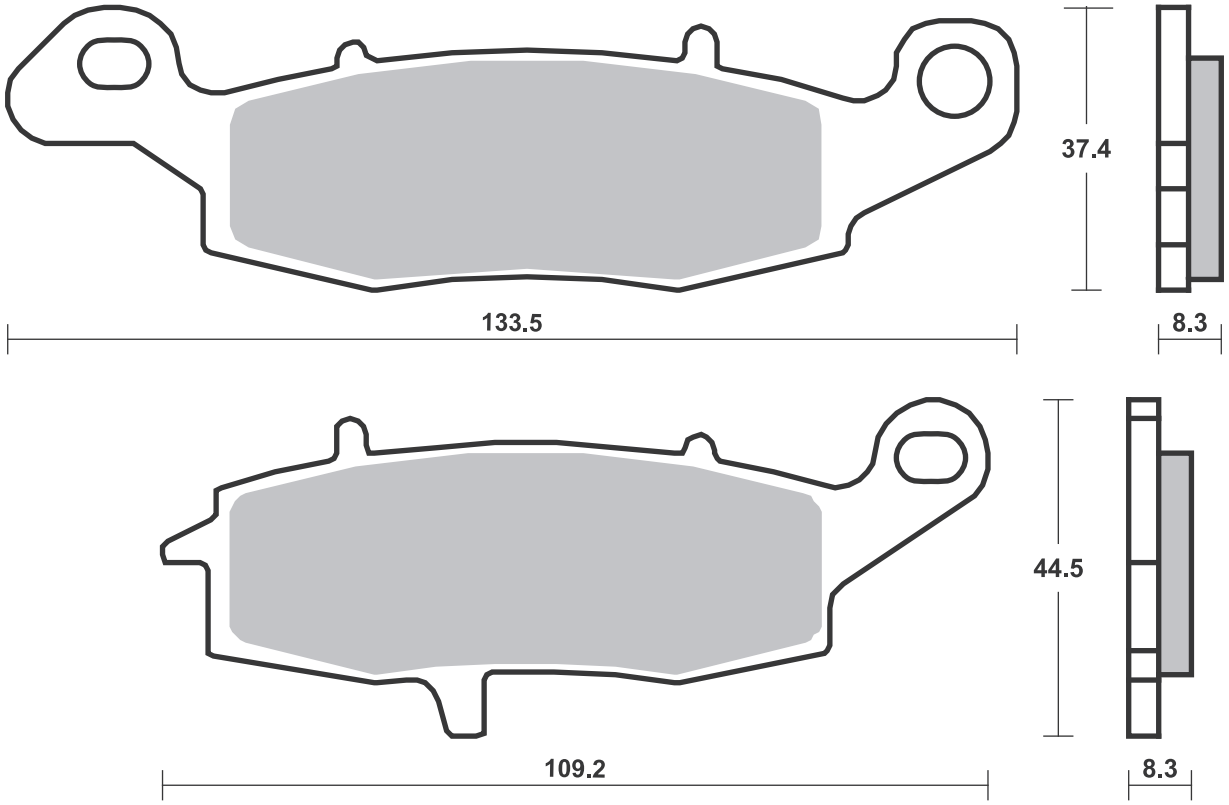

Available compounds **HF • HS • SP • RST** **SBS 705**

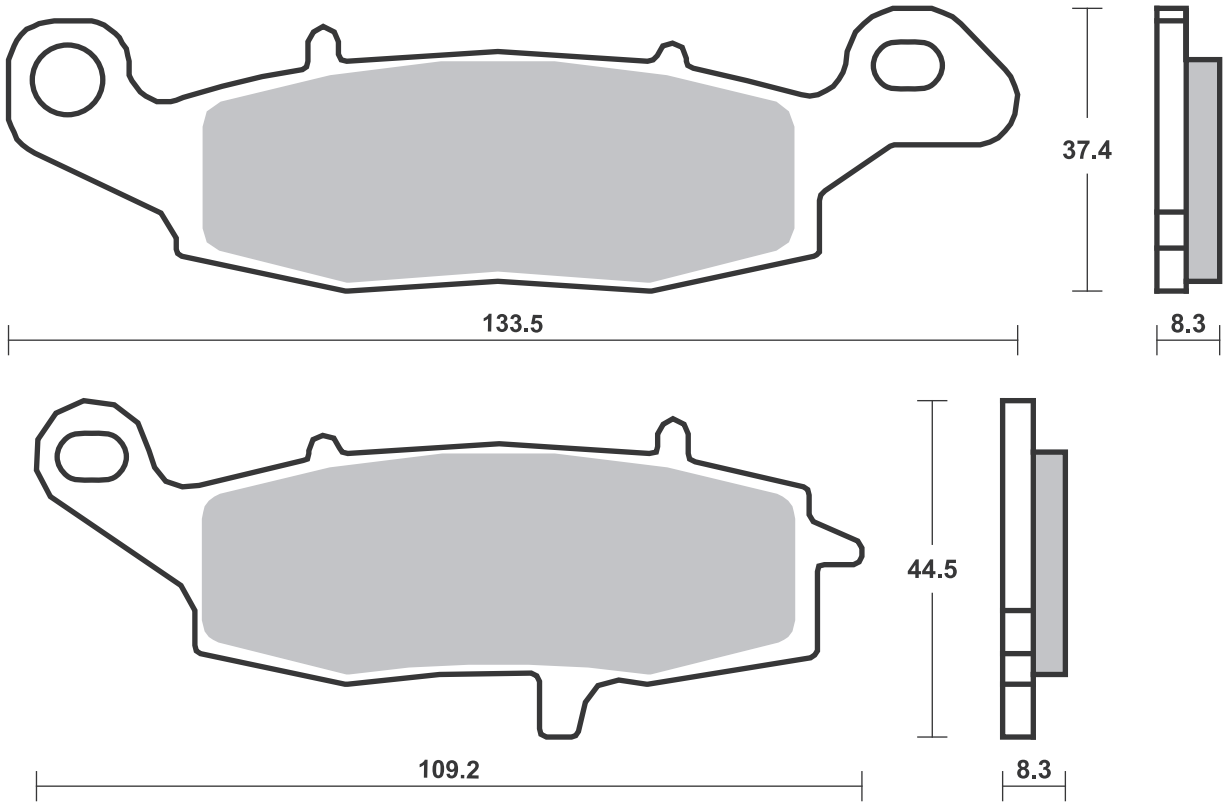

Dimensions in mm / Dimensions en mm • 1” = 25.4 mm , 1 mm = 0.04”

SBS 706 Recommended compound

APRILIA				
RS	250	Pista	04-04	**HF**
	650	Pegaso Strada	05-09	**HS**
	750	Dorsoduro Factory	12-13	**HS**
SMV	750	Dorsoduro	08-08	**HS**
	1000	Blue Marlin	02-02	**HS**
RST	1000	Futura	01-03	**HS**
RSV	1000	Falco SL, R	00-04	**HS**
RSV	1000	Mille	97-01	**HS**
RSV	1000	Mille R	00-00	**HS**
RSV	1000	Mille SP	00-00	**HS**
RSV	1000	Tuono Fighter	03-05	**HS**
RSV	1000	Tuono R, ABS	04-12	**HS**
RSV	1000	Tuono V4 R	11-13	**HS**
	1200	Dorsoduro, ABS	11-14	**HS**
BENELLI				
	500	Leoncino	16-17	**HS**
TRK	502		16-17	**HS**
BN	600		12-13	**HS**
	756	Cue	10-12	**HS**
	899	Trek	07-12	**HS**
TnT	899		07-15	**HS**
	900	Tornado 3	00-06	**HS**
TnT	1100		04-04	**HS**
TnT	1130		05-14	**HS**
TnT	1130	Trek	06-12	**SP**
TnT	1130	Trek Amazonas	07-15	**SP**
BIMOTA				
DB4	900		99-00	**HS**
SB8	1000	R	98-00	**HS**
SB8K	1000		06-06	**HS**
BMW				
G	650	Xmoto	06-07	**HS**
F	800	GT	13-20	**HS**
F	800	R	09-14	**HS**
F	800	S	06-10	**HS**
F	800	ST	06-12	**HS**
F	800	ST Touring	11-12	**HS**
R	1200	Nine-T Pure	17-21	**HS**
R	1200	Nine-T Racer	17-20	**HS**
R	1200	Nine-T Scrambler	16-21	**HS**
R	1200	Nine-T Urban GS	17-21	**SP**
BRAKING				
Street, Supermotard				
BRAMMO				
		Empulse	14-16	**H.HS**
BREMBO RACING CALIPERS				
100 mm Motard Radial XA78910, P4 30/34				
100 mm Radial 220A16810, P4 30/34				
100 mm Radial 220A80310, P4 30/34				
108 mm Motard Radial XA69510, P4 30/34				
108 mm Radial 220A01610, P4 30/34				
BREMBO RACING CALIPERS				
108 mm Radial 220A80210, P4 30/34 Goldline two pin 20.6800, road Radial 220A16820, P4 30/34				
CAGIVA				
	650	Raptor	01-08	**HS**
	650	V-Raptor	01-08	**HS**
	1000	Raptor	00-08	**HS**
	1000	V-Raptor	00-08	**HS**
	1000	Xtra Raptor	02-06	**HS**
DUCATI				
	400	Monster (Japan)	01-06	**HS**
	600	Monster	00-01	**HS**
	620	Monster Dark i.e.	02-06	**HS**
	620	Monster i.e., s i.e.	02-06	**HS**
	620	Multistrada Dark	05-06	**HS**
	620	Sport	03-06	**HS**
	696	Monster	08-12	**HS**
	748	, S	99-02	**HS**
	748	R	00-00	**HS**
	748	SPS	98-99	**HS**
	750	Monster	00-01	**HS**
	750	Monster i.e.	02-02	**HS**
	750	Sport	00-02	**HS**
	750	Super Sport	00-02	**HS**
	795	Monster	12-12	**HS**
	796	Hypermotard ABS	10-12	**HS**
	796	Monster	11-14	**HS**
	796	Monster ABS	11-14	**HS**
	800	Monster Dark i.e., s i.e.	03-07	**HS**
	800	Monster i.e., s i.e.	03-07	**HS**
	800	Sport	03-06	**HS**
	800	Supersport	03-06	**HS**
	848		08-10	**HS**
	848	Streetfighter	12-15	**HS**
	900	Monster	00-01	**HS**
	900	Monster i.e.	02-02	**HS**
	900	Super Sport	98-02	**HS**
MH	900		00-01	**HS**
	916	Monster S4	01-03	**HS**
	916	Sport Touring 4	99-01	**HS**
	916	SPS	97-98	**HS**
	944	Sport Touring	98-03	**HS**
	944	ST2	97-03	**HS**
	992	ST3	04-07	**HS**
	992	ST3s ABS	06-07	**HS**
	996	, SPS	99-01	**HS**
	996	Monster S4R	04-06	**HS**
	996	ST4s	02-06	**HS**
	996	ST4s ABS	03-06	**HS**
	998	, S	02-04	**HS**
	1000	Monster Dark i.e., s i.e.	03-06	**HS**
	1000	Monster i.e., s i.e.	03-06	**HS**
DUCATI				
	1000	Monster S2R	06-07	**HS**
	1000	Multistrada	07-07	**HS**
	1000	Multistrada DS	03-06	**HS**
	1000	Multistrada S DS	05-06	**HS**
	1000	Supersport DS	03-06	**HS**
	1100	Hypermotard EVO	10-13	**HS**
	1100	Monster	09-13	**HS**
	1100	Monster ABS	09-10	**HS**
	1100	Monster EVO	11-13	**HS**
	1100	Monster EVO ABS	11-13	**HS**
	1100	Monster S	09-13	**HS**
	1100	Monster S ABS	09-10	**HS**
	1100	Multistrada	07-09	**HS**
	1100	Multistrada S	07-09	**HS**
	1200	Multistrada	10-14	**SP**
	1200	Multistrada S GT	12-14	**SP**
	1200	Multistrada S Pikes Peak	11-14	**SP**
	1200	Multistrada S Sport	10-14	**SP**
	1200	Multistrada S Touring	10-14	**SP**
HUSQVARNA				
	570	Nox	01-03	**HF**
LT	610		00-02	**HF**
SM	610	Super Motard, S	98-00	**HF**
SMR	630		04-08	**RST**
	701	Svartpilen	18-19	**HS**
	701	Vitpilen	18-20	**HS**
	900	Norden	20-20	**SP**
	900	Nuda	12-13	**HS**
KTM				
SMC	625		05-06	**HF**
	640	Duke	03-06	**HF**
LC4	640	Supermoto	04-04	**HF**
SMC	660	Supermoto	04-07	**HF**
	690	Duke ABS	12-19	**HS**
	790	Adventure	19-20	**HS**
	790	Adventure R	19-20	**HS**
	790	Adventure R Rally	20-20	**HS**
	790	Duke	18-20	**HS**
	1050	Adventure	15-16	**SP**
	1090	Super Adventure	17-19	**SP**
	1090	Super Adventure R	17-20	**SP**
	1190	Adventure	13-16	**SP**
	1290	Super Adventure	15-16	**SP**
	1290	Super Adventure R	17-20	**SP**
	1290	Super Adventure S	17-20	**SP**
	1290	Super Adventure T	17-19	**SP**
MOTO-GUZZI				
	750	Breva	03-09	**HS**

Brake Pad 1:1 Drawings, Compounds, Fitments

Applications for this part number continues on following page.

Available compounds **HF • HS • SP • DC • RST • DS-1 • DS-2 • H.HF • H.CT • H.HS** **SBS 706**

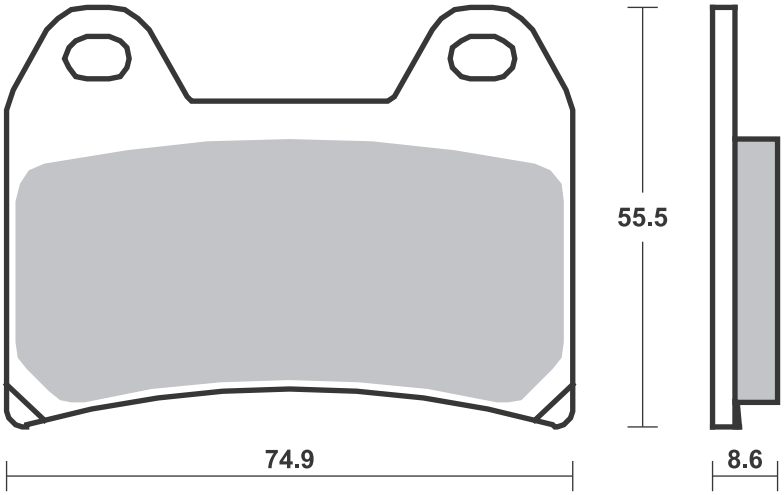

SBS 706 Recommended compound

MOTO-GUZZI

	750	Nevada Classic ie	06-11	**HF**
	750	Nevada, Nevada Club	03-16	**HF**
V7	750	Cafe Classic	10-13	**HS**
V7	750	Classic	09-12	**HS**
V7	750	Clubman Racer	10-10	**HS**
V7	750	Racer	11-14	**HS**
V7	750	Stone	12-14	**HS**
V7 II	750	Racer	15-16	**HS**
V7 II	750	Scrambler	16-16	**HS**
V7 II	750	Special	15-16	**HS**
V7 II	750	Stone	15-16	**HS**
V7 II	750	Stornello	16-16	**HS**
V7 II	750	Stornello Ltd. Edition	17-18	**HS**
V7 III	750	Anniversario	17-18	**HS**
V7 III	750	Carbon	18-19	**HS**
V7 III	750	Euro 4	17-19	**HS**
V7 III	750	Limited	19-19	**HS**
V7 III	750	Milano	18-20	**HS**
V7 III	750	Racer	17-20	**HS**
V7 III	750	Rough	18-20	**HS**
V7 III	750	Special	17-19	**HS**
V7 III	750	Stone	17-20	**HS**
	850	Breva	06-09	**HS**
V85	850	TT	19-19	**HS**
V85	850	TT travel	20-20	**HS**
V9	850	Bobber	16-17	**HS**
V9	850	Bobber Sports	19-20	**HS**
V9	850	Roamer	16-17	**HS**
V9	850	X-Track	17-17	**HS**
	940	Custom	07-07	**HS**
	1100	California EV	06-06	**HS**
	1100	California EV Touring	06-06	**HS**
	1100	California Jackal	01-06	**HS**
	1100	California Jackal Basic	01-06	**HS**
	1100	California Special	01-01	**HS**
	1100	California Special Sport Alloy	02-06	**HS**
	1100	California Stone Metal	02-03	**HS**
	1100	California Stone, Stone Touring	02-05	**HS**
	1100	California Titanium	03-05	**HS**
	1100	California Vintage	06-13	**HS**
	1100	Griso	05-10	**HS**
EV	1100	California, 80, Touring	01-01	**HS**
V	1100	Breva	04-04	**HS**
V	1100	Breva, ABS	05-07	**HS**
V11	1100	, Scura, Sport Scura	02-05	**HS**
V11	1100	Lemans, Lemans Tenni, Lemans Rosso Corsa	01-06	**HS**

MOTO-GUZZI

V11	1100	Sport Rosso Mandell	01-06	**HS**
V11	1100	Sport, Sport Naked	01-05	**HS**
	1200	Griso 8V	07-13	**HS**
	1200	Griso 8V SE	18-18	**HS**
	1200	Norge	06-14	**HS**
	1200	Norge GT 8V	10-13	**HS**
	1200	Sport	07-08	**HS**
	1200	Sport 4V	09-11	**HS**
	1200	Sport 8V	12-13	**HS**
	1200	Sport 8V SE	12-15	**HS**
	1200	Stelvio	08-11	**SP**
	1200	Stelvio 8V SE	12-16	**SP**
	1200	Stelvio NTX	09-11	**SP**
V	1200	Breva	08-13	**HS**
	1400	Audace	15-17	**HS**
	1400	California Custom	13-15	**HS**
	1400	California Touring	13-15	**HS**
	1400	California Touring SE	16-17	**HS**
	1400	Eldorado	15-17	**HS**
MGX-21	1400	Flying Fortress	15-17	**HS**

MOTO-MORINI

	1200	11 1/2	18-18	**HS**
	1200	9 1/2	06-09	**HS**
	1200	Corsaro	06-13	**HS**
	1200	Sport	08-13	**HS**

MOTUS

MST	1650		14-17	**HS**

MV AGUSTA

	675	Brutale	12-15	**HS**
	675	F3	11-14	**HS**
	800	Brutale	13-20	**HS**
	800	Brutale Dragster	15-19	**HS**
	800	Brutale Dragster RC	17-20	**HS**
	800	Brutale Dragster RR	15-19	**HS**
	800	Brutale Dragster RR LH44	18-20	**HS**
	800	Brutale Dragster RR Pirelli	18-20	**HS**
	800	Brutale RC	18-20	**HS**
	800	Brutale RR	16-20	**HS**
	800	RVS#1	18-20	**HS**
	920	Brutale	12-14	**HS**
	989	Brutale R	09-09	**HS**
	990	Brutale R	10-11	**HS**
	1090	Brutale R	12-15	**HS**

MZ

	1000	(MUZ) S	01-02	**HS**

NORTON

	961	Commando SE	10-11	**HS**
	961	Commando SF Sport	11-15	**HS**

VICTORY

		Empulse TT	16-17	**H.HS**
	1500	Kingpin	04-05	**H.HS**
	1500	Touring Cruiser	03-06	**H.HS**
	1500	V92C Cruiser	98-02	**H.HS**
	1500	V92C Deluxe	01-02	**H.HS**
	1500	V92SC Sport Cruiser	00-02	**H.HS**
	1500	Vegas	03-05	**H.HS**
	1500	Vegas 8-Ball	05-05	**H.HS**
	1634	Hammer	05-07	**H.HS**
	1634	Hammer S	06-08	**H.HS**
	1634	Kingpin	06-07	**H.HS**
	1634	Kingpin Tour	06-07	**H.HS**
	1634	Vegas	06-07	**H.HS**
	1634	Vegas 8-Ball	06-07	**H.HS**
	1634	Vegas Jackpot	06-07	**H.HS**

YAMAHA

XT	660	X	04-13	**HS**

ZERO

DSRBF		ZF14.4	19-21	**HS**
SR/F		ZF14.4	19-21	**HS**
SR/S		ZF14.4	19-21	**HS**

Available compounds **HF • HS • SP • DC • RST • DS-1 • DS-2 • H.HF • H.CT • H.HS** **SBS 706**

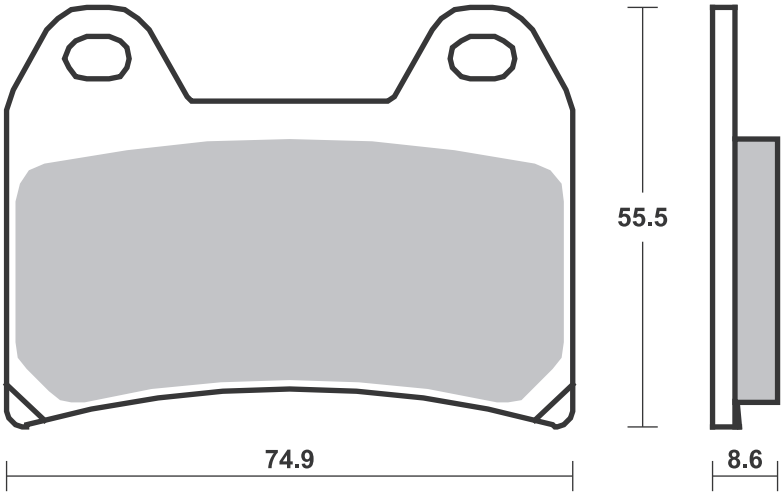

SBS 707 Recommended compound

A.P. RACING CALIPERS	
6 Piston 4466/4477 Series	
PFM	
6 Piston Racing Caliper	

SBS 708 Recommended compound

SYM				
	125	Attila	95-02	**HF**
H01	150		95-00	**HF**
ZERO				
DS		ZF6.0	10-12	**HF**
DS		ZF9.0	10-12	**HF**
MX			10-12	**HF**
S		ZF6.0	10-12	**HF**
X			10-12	**HF**
XU			11-12	**HF**

Available compounds **RST • DS-1 • RQ** **SBS 707**

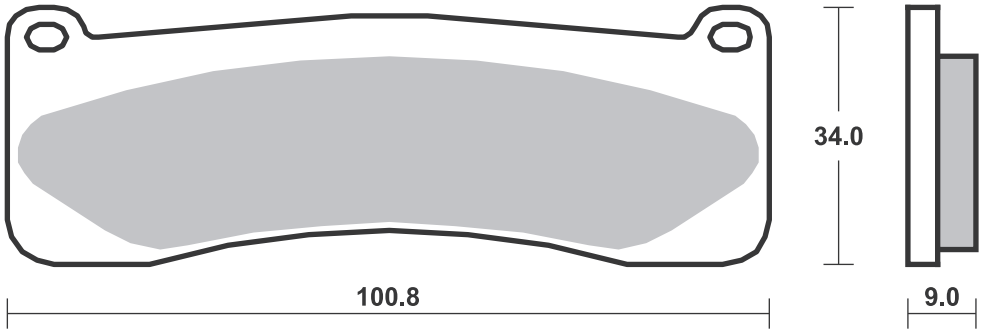

Available compounds **HF** **SBS 708**

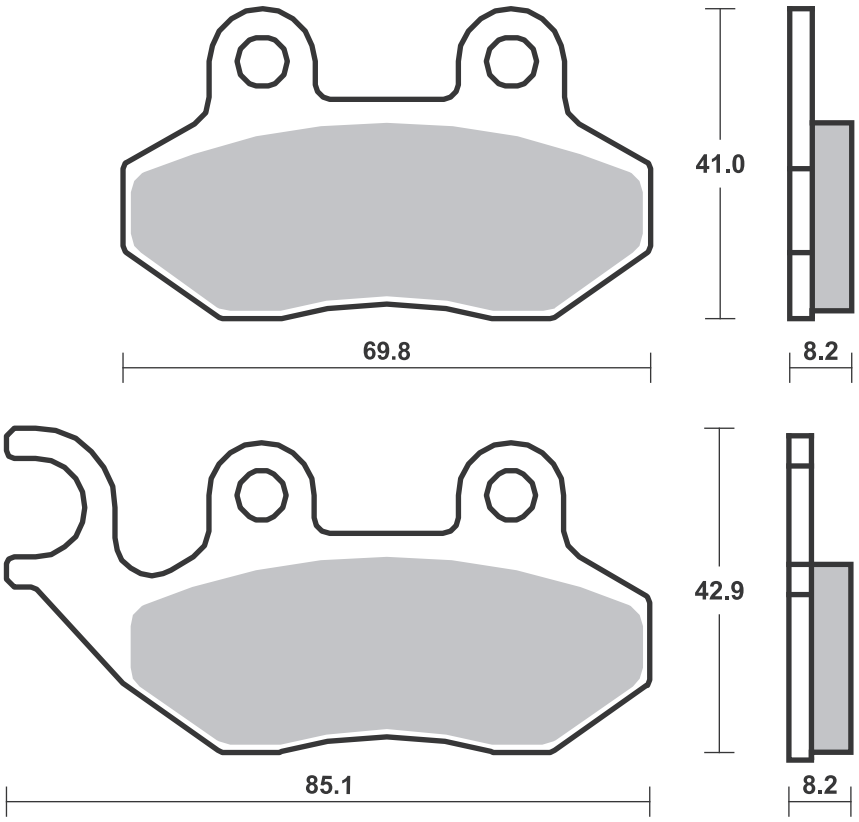

Dimensions in mm / Dimensions en mm • 1” = 25.4 mm , 1 mm = 0.04”

SBS 709 Recommended compound

YAMAHA			
YFZ	450 S	06-09	**SI**
YFM	700 Raptor	13-14	**SI**

SBS 711 Recommended compound

BREMBO RACING CALIPERS
100 mm Radial Monoblock
XA7G210/11, P4 32/36
100 mm Radial Monoblock
XA7G240/41, P4 32/36
Monoblock X101740/41,
P4 32/36
Radial Monoblock
X973760/61, P4 32/36
Radial Monoblock
XA93310/11
Radial XA3B830/31,
P4 32/36
Radial XA3B860/61,
P4 32/36
NISSIN
4 Piston Racing Caliper

Available compounds **HF • LS • SI • RSI** **SBS 709**

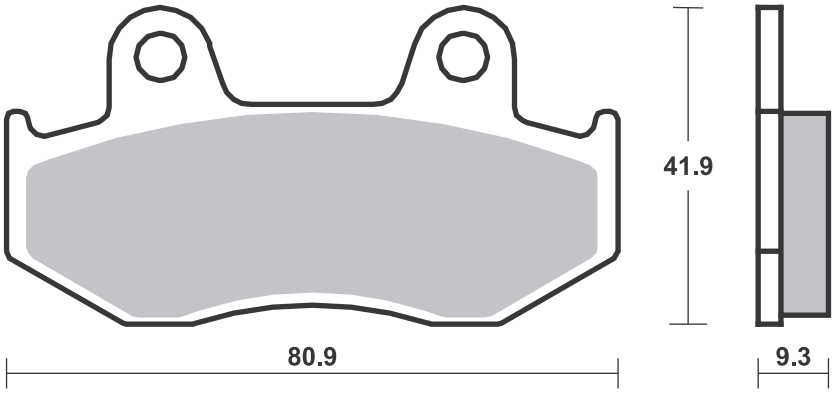

Available compounds **DC • RST • DS-1 • DS-2** **SBS 711**

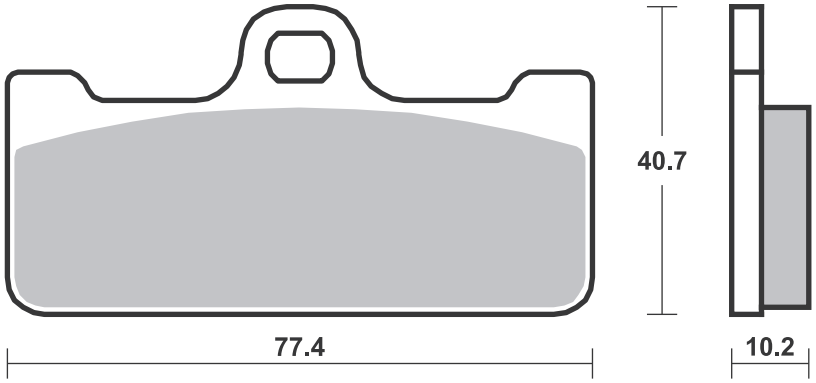

SBS 713 Recommended compound

HONDA				
CMX	250	C Rebel	96-00	**HF**
KEEWAY				
	125	Superlight	06-16	**HF**
	150	Superlight	06-16	**HF**
	250	Land Cruiser	06-14	**HF**

SBS 714 Recommended compound

SUZUKI				
RF	900	RR,RS,RS2,T,V	94-97	**HS**
GSF	1200	Bandit	97-00	**HS**

Available compounds **HF** **SBS 713**

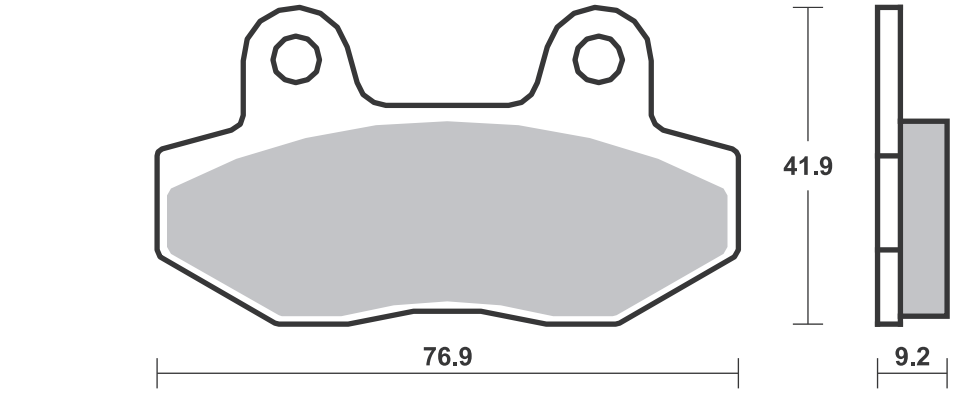

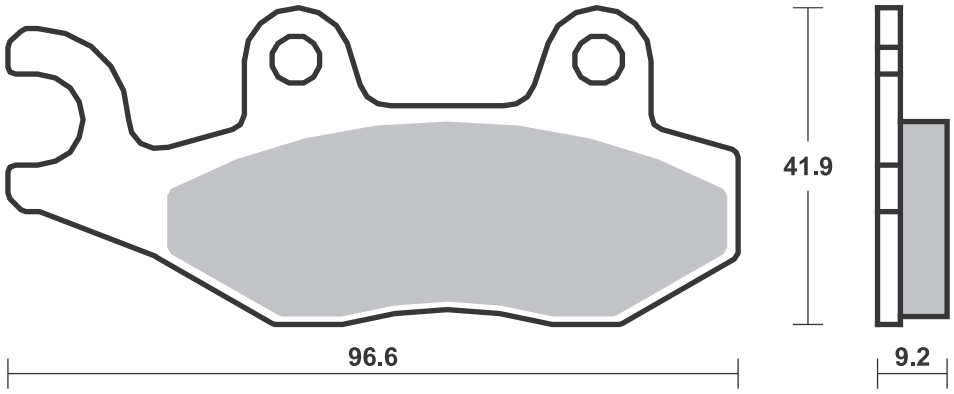

Available compounds **HF • HS** **SBS 714**

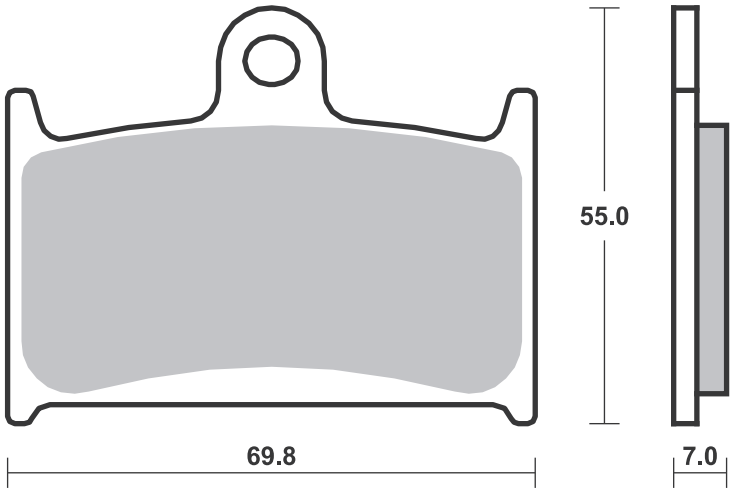

Dimensions in mm / Dimensions en mm • 1” = 25.4 mm , 1 mm = 0.04”

SBS 715 Recommended compound

HARLEY DAVIDSON					
XL	883	L Super Low	14-18		**H.LS**
XL	883	N Iron	14-18		**H.LS**
XL	883	R Roadster	14-15		**H.LS**
XL	1200	C, CA, CB, CP Custom	14-19		**H.LS**
XL	1200	CX	17-17		**H.LS**
XL	1200	Iron	18-20		**H.LS**
XL	1200	Roadster	18-20		**H.LS**
XL	1200	T Super Low	15-17		**H.LS**
XL	1200	V Seventy-Two	14-16		**H.LS**
XL	1200	X Forty-Eight	14-18		**H.LS**
XL	1200	X Forty-Eight Spec.	19-20		**H.LS**

HONDA					
VT	750	C2S ABS	13-14		**LS**
VT	750	CS ABS	13-14		**LS**
VT	750	Shadow Aero	13-18		**LS**
CB	1300	R	02-04		**LS**
KAWASAKI					
ZX-7RR	750	Ninja	96-02		**LS**
ZG	1400	Concours	07-10		**LS**
ZX-14R	1400	Ninja	06-15		**LS**
ZX-14R	1400	Ninja ABS	07-15		**LS**
ZX-14R	1400	SE	16-18		**LS**
MZ					
	1000	(MUZ) S	03-10		**LS**
	1000	(MUZ) SF	05-10		**LS**

MZ					
	1000	(MUZ) SFX	07-07		**LS**
	1000	(MUZ) SN	05-05		**LS**
	1000	(MUZ) ST	07-10		**LS**

SBS 716 Recommended compound

POLARIS					
	250	2x4, 4x4	90-93	**ATS**	
	250	Big Boss 4x6, 6x6	89-93	**ATS**	
	250	Trail Blazer	90-07	**ATS**	
	250	Trail Boss	91-99	**ATS**	
	250	Trail Boss 2x4, 4x4	91-92	**ATS**	
	250	Xplorer 4x4	00-02	**ATS**	
	300	2x4, 4x4	94-95	**ATS**	
	300	Big Boss 6x6	94-94	**ATS**	
	300	Hawkeye 2x4, 4x4	07-11	**ATS**	**ATS**
	300	Xplorer 4x4	96-99	**ATS**	
	300	Xpress 2x4	98-99	**ATS**	
	300	Xpress L	96-97	**ATS**	
	325	Magnum x4, 4x4	00-02	**ATS**	
	325	Trail Boss	00-02	**ATS**	
	330	ATP	04-05	**ATS**	**ATS**
	330	ATP	06-05	**ATS**	
	330	Magnum 2x4, 4x4	03-13	**ATS**	
	330	Trail Boss	03-14	**ATS**	
	335	Sportsman 4x4	99-02	**ATS**	
	350	Big Boss	93-93	**ATS**	
	350	L 2x4, 4x4	90-90	**ATS**	
	350	L 4x4	93-93	**ATS**	
	350	Sportsman 4x4	93-93	**ATS**	
	350	Trail Boss 2x4, 4x4	88-89	**ATS**	
	350	Trail Boss L 2x4	91-93	**ATS**	
	350	Trail Boss L 4x4	91-91	**ATS**	
	400	Big Boss L 6x6	96-96	**ATS**	
	400	L 2x4	94-95	**ATS**	
	400	L 4x4	94-94	**ATS**	
	400	Scrambler 2x4, 4x4	00-03	**ATS**	
	400	Scrambler 4x4	98-03	**ATS**	

POLARIS					
	400	Scrambler L 4x4	95-97	**ATS**	
	400	Sport	99-00	**ATS**	
	400	Sport L	94-98	**ATS**	
	400	Sportsman	01-13	**ATS**	
	400	Sportsman L 4x4	94-97	**ATS**	
	400	Trail Blazer	03-04	**ATS**	
	400	Xplorer L 4x4	95-02	**ATS**	
	400	Xpress L	96-97	**ATS**	
	425	2x4, 4x4 Magnum	95-98	**ATS**	
	425	Magnum 6x6	96-96	**ATS**	
	425	Xpedition 4x4	00-03	**ATS**	
	450	Sportsman	06-09	**ATS**	
	455	Diesel EBS 4x4	99-01	**ATS**	
	500	ATP HO	04-05	**ATS**	**ATS**
	500	Big Boss 6x6	98-99	**ATS**	
	500	Magnum 2x4, 4x4	02-07	**ATS**	
	500	Magnum 4x4	00-01	**ATS**	
	500	Outlaw	06-09	**ATS**	**ATS**
	500	Predator	03-13	**ATS**	**ATS**
	500	Predator e	06-13	**ATS**	
	500	Ranger 6x6	00-02	**ATS**	
	500	Scrambler 2x4	01-02	**ATS**	
	500	Scrambler 4x4	97-13	**ATS**	
	500	Sportsman 4x4	96-14	**ATS**	
	500	Sportsman 6x6	00-11	**ATS**	
	500	Sportsman EBS 4x4	98-02	**ATS**	
	500	Xplorer 4x4	97-97	**ATS**	

Available compounds **HF • LS • RQ • H.HF • H.CT • H.LS** **SBS 715**

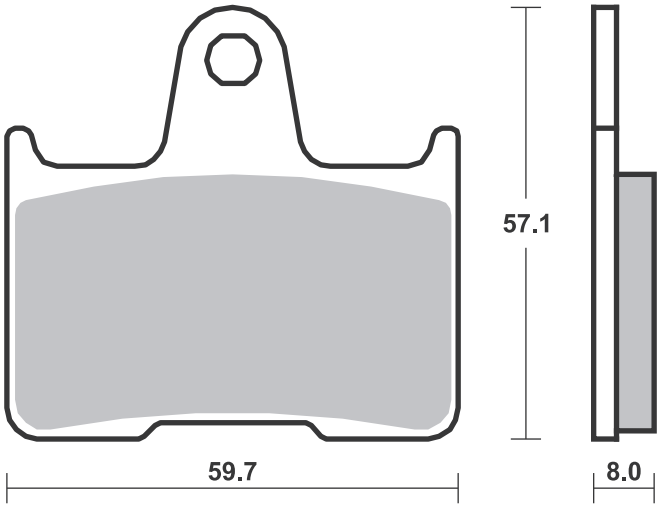

Available compounds **HF • SI • RSI • ATS** **SBS 716**

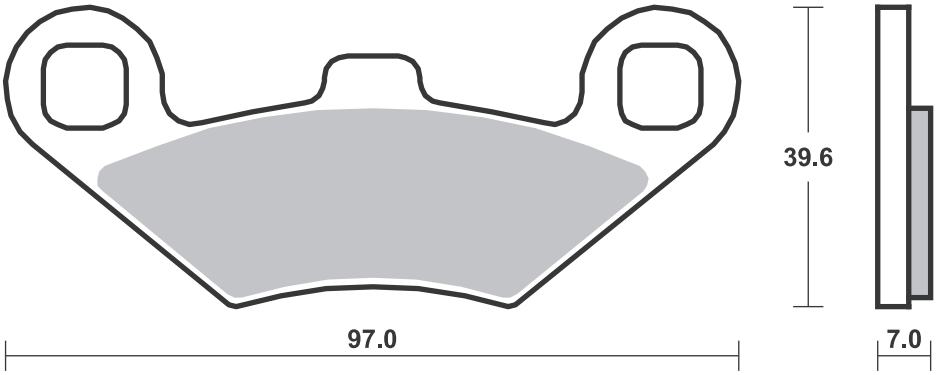

SBS 717 Recommended compound

POLARIS			
250	2x4, 4x4	90-93	**ATS**
250	Big Boss 4x6, 6x6	89-93	**ATS**
250	Big Boss 4x6, 6x6 Middle Axle Brake	89-93	**ATS**
250	Trail Blazer	90-98	**ATS**
250	Trail Boss	91-99	**ATS**
250	Trail Boss 2x4, 4x4	91-92	**ATS**
300	2x4, 4x4	94-95	**ATS**
300	Big Boss 6x6	94-94	**ATS**
300	Big Boss 6x6 Middle Axle Brake	94-94	**ATS**
300	Xplorer 4x4	96-99	**ATS**
300	Xpress 2x4	98-99	**ATS**
300	Xpress L	96-97	**ATS**
350	Big Boss	93-93	**ATS**
350	Big Boss Middle Axle Brake	93-93	**ATS**
350	L 2x4, 4x4	90-90	**ATS**
350	L 4x4	93-93	**ATS**
350	Sportsman 4x4	93-93	**ATS**
350	Trail Boss 2x4, 4x4	88-89	**ATS**
350	Trail Boss L 2x4	91-93	**ATS**
350	Trail Boss L 4x4	91-91	**ATS**
400	Big Boss L 6x6	96-96	**ATS**
400	L 2x4	94-95	**ATS**
400	L 4x4	94-94	**ATS**
400	Scrambler 4x4	98-98	**ATS**
400	Scrambler L 4x4	95-97	**ATS**
400	Sport L	94-98	**ATS**
400	Sportsman L 4x4	94-97	**ATS**
400	Xplorer L 4x4	95-99	**ATS**
400	Xpress L	96-97	**ATS**
425	2x4, 4x4 Magnum	95-98	**ATS**
425	Magnum 6x6	96-96	**ATS**
500	Big Boss 6x6	98-99	**ATS**
500	Big Boss 6x6 Middle Axle Brake	98-99	**ATS**
500	Scrambler 4x4	97-97	**ATS**
500	Sportsman 4x4	96-14	**ATS**
500	Xplorer 4x4	97-97	**ATS**

SBS 718 Recommended compound

A.P. RACING CALIPERS
CP-3548

Available compounds **HF • SI • RSI • ATS** **SBS 717**

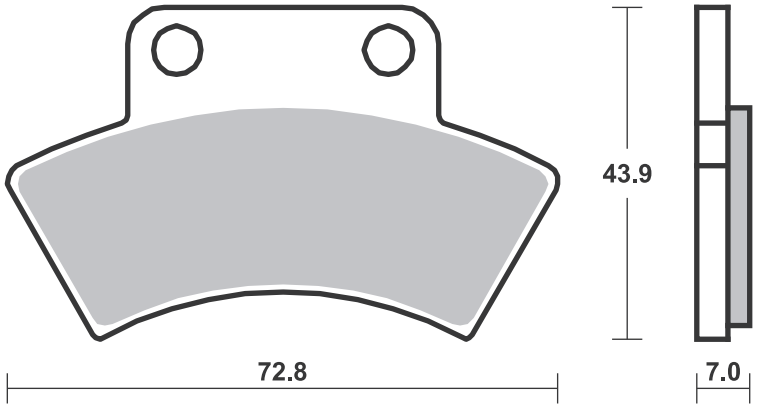

Available compounds **HF • SI • RSI** **SBS 718**

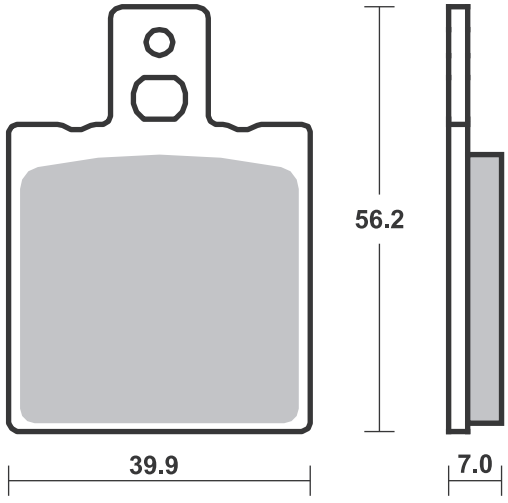

SBS 719 Recommended compound

A.P. RACING CALIPERS	
CP-4226-2S0/3S0	

SBS 720 Recommended compound

A.P. RACING CALIPERS	
CP-4484-2S0/3S0	

Available compounds **RST • RQ** **SBS 719**

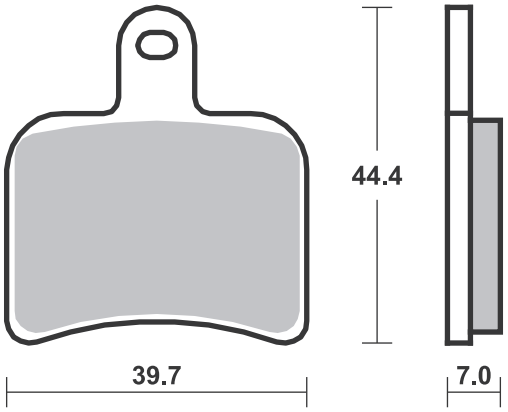

Available compounds **RQ** **SBS 720**

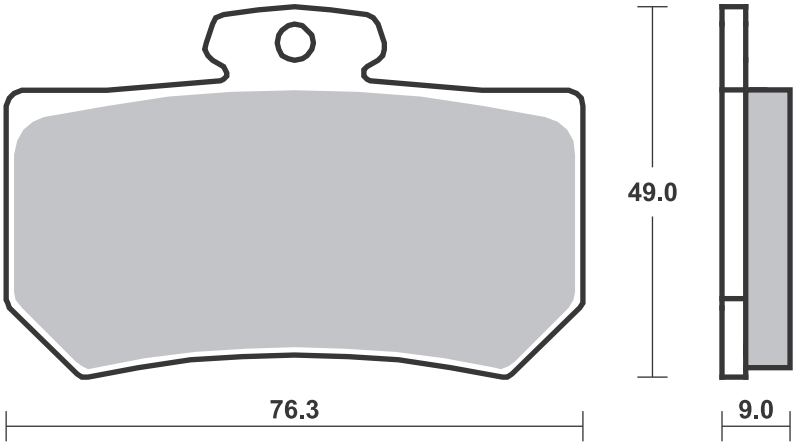

SBS 721 Recommended compound

HONDA	
ST 1100 A6	
ABS-TCS-CBS 96-01	**HS**

SBS 722 Recommended compound

HONDA	
ST 1100 A6	
ABS-TCS-CBS 96-01	**LS**
ST 1300 , ABS 02-13	**LS**

Available compounds **HF • HS** **SBS 721**

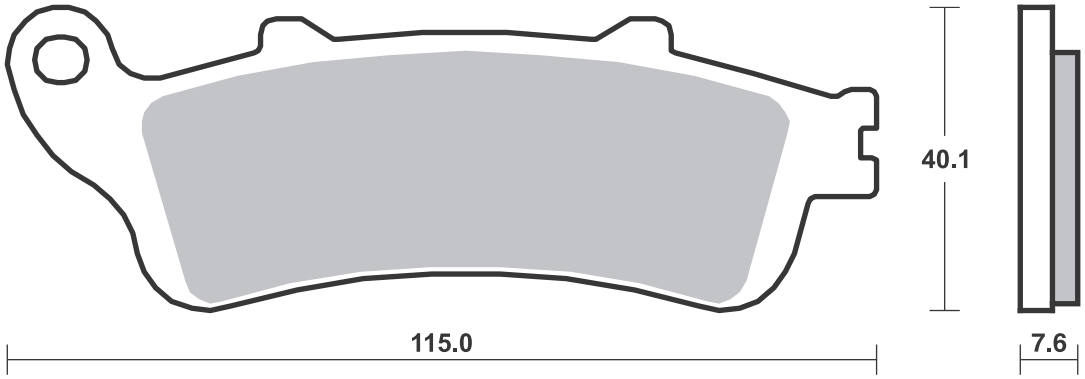

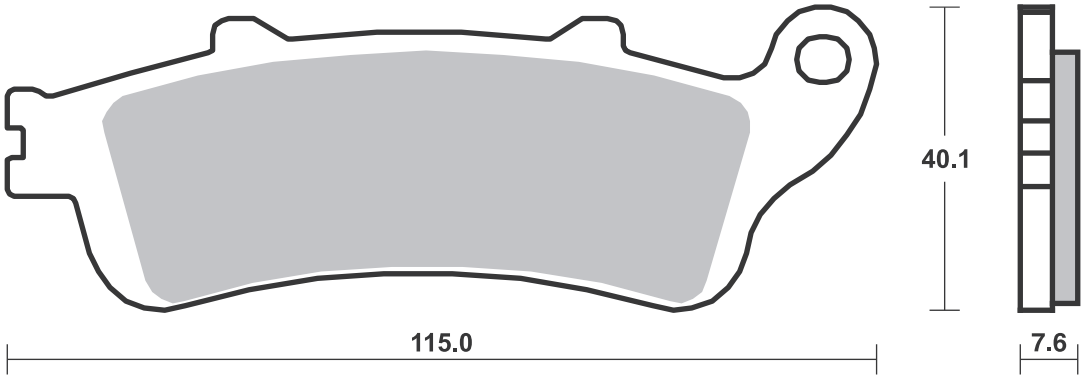

Available compounds **HF • LS** **SBS 722**

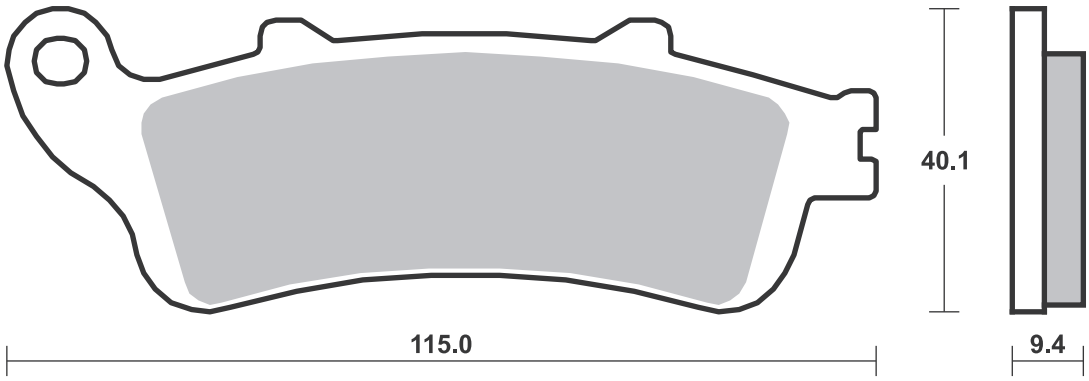

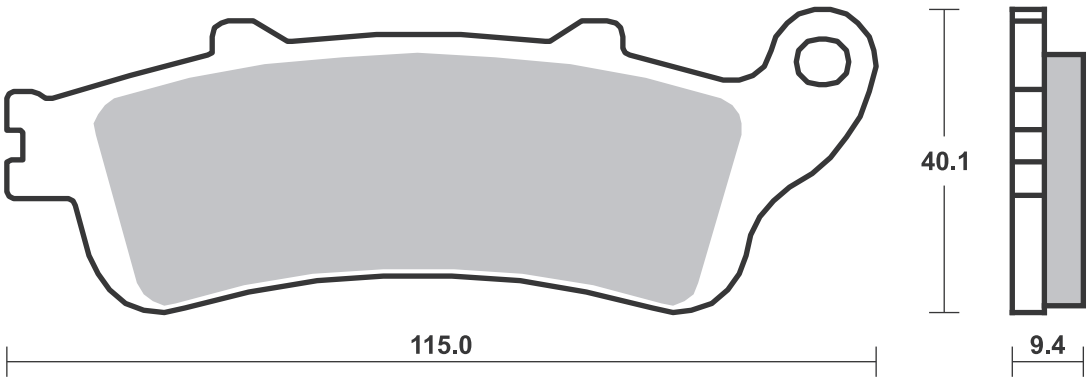

Dimensions in mm / Dimensions en mm • 1” = 25.4 mm , 1 mm = 0.04”

SBS 726 Recommended compound

KAWASAKI					
KX	80		97-00	**RSI**	
KX	85		01-21	**RSI**	
KX	85 II		01-21	**RSI**	
KX	100		97-21	**RSI**	
KL	250	Super Sherpa	00-02	**SI**	
SUZUKI					
RM	85		05-21	**RSI**	
RM	100		03-03	**RSI**	

SBS 728 Recommended compound

YAMAHA					
TW	125		99-07	**HF**	
DT	175		00-00	**HF**	
TW	200		01-21	**HF**	
XT	225		01-01	**HF**	
XG	250	Tricker	05-11	**HF**	
XT	250		08-08	**HF**	
YZF	600	R6	99-02		**LS**
YZF	1000	R1	02-03		**LS**

SBS 729 Recommended compound

NISSIN					
6 Piston Racing Caliper					
PERFORMANCE MACHINE					
112 X 6B					
112 X 6QC					
YAMAHA					
YZF	750	R7 OW02 Race kit	99-01	**HS**	

Available compounds **CS • SI • RSI** **SBS 726**

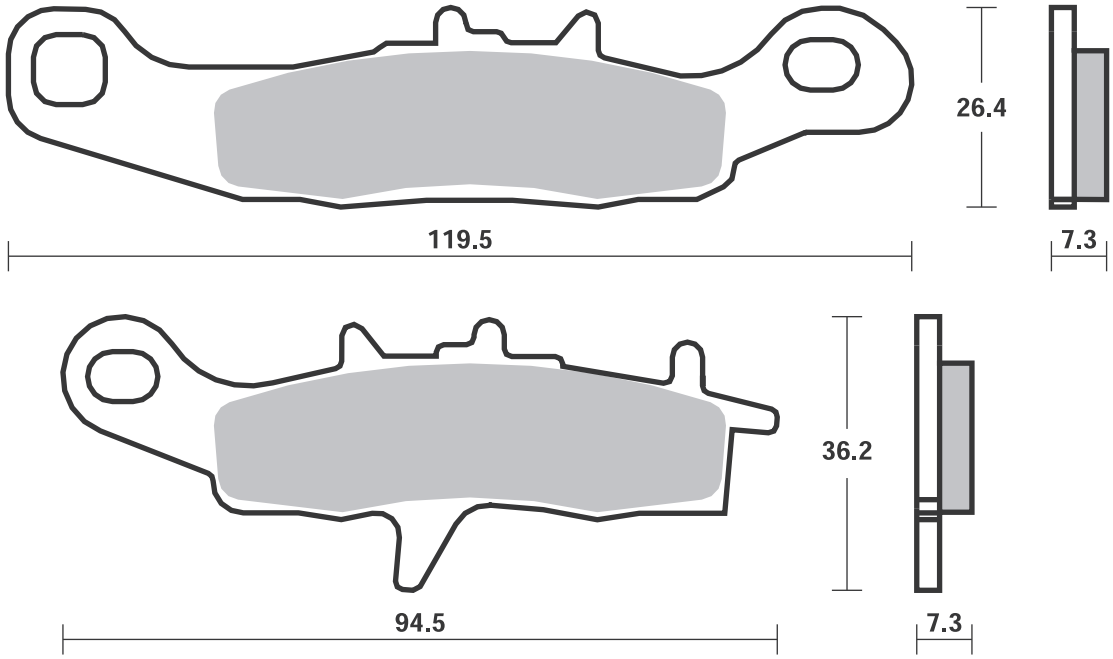

Available compounds **HF • LS • RQ** **SBS 728**

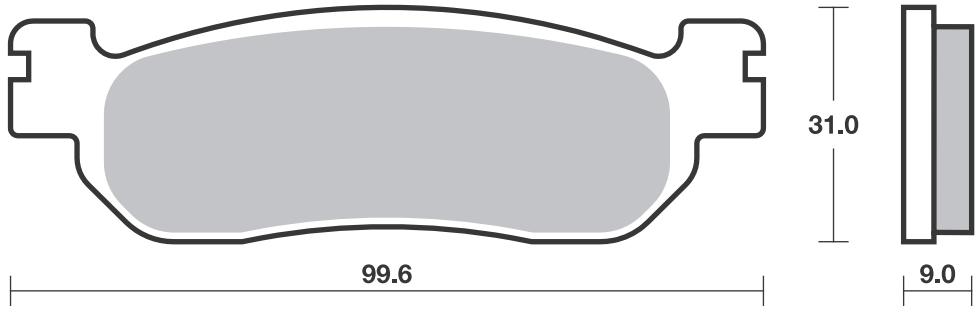

Available compounds **HF • HS • DC • H.HF • H.CT • H.HS** **SBS 729**

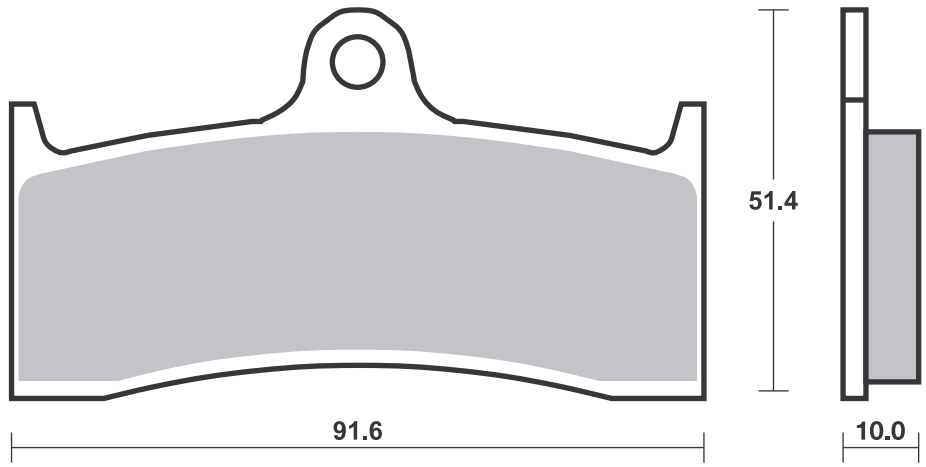

Dimensions in mm / Dimensions en mm • 1” = 25.4 mm , 1 mm = 0.04”

SBS 730 Recommended compound

APRILIA					
RS	660		20-21		**LS**
	1000	Blue Marlin	02-02		**LS**
ETV	1000	Caponord	01-08		**LS**
ETV	1000	Caponord Rally Raid	04-08		**LS**
RSV	1000	Factory Pista	04-04		**LS**
RSV	1000	Falco SL, R	00-04		**LS**
RSV	1000	Mille	97-03		**LS**
RSV	1000	Mille Nera	04-04		**LS**
RSV	1000	Mille R	00-07		**LS**
RSV	1000	Mille R Factory	04-05		**LS**
RSV	1000	Mille SP	00-00		**LS**
RSV	1000	Tuono Fighter	03-05		**LS**
RSV	1000	Tuono R	03-03		**LS**
RSV	1000	Tuono R Factory, ABS	06-12		**LS**
RSV	1000	Tuono R, ABS	04-12		**LS**
RSV	1000	Tuono V4 R	11-14		**LS**
RSV4	1000	, ABS	09-13		**LS**
RSV4-R	1000	, ABS APRC	10-10		**LS**
RSV4-RF	1000		15-20		**LS**
RSV4-RR	1000		15-20		**LS**
RSV	1100	Tuono V4	15-15		**LS**
RSV	1100	Tuono V4 Factory	15-18		**LS**
RSV	1100	Tuono V4 RR	15-19		**LS**
RSV4	1100	Factory	19-20		**LS**
BENELLI					
	500	C	19-19		**LS**
	500	Leoncino	16-17		**LS**
TRK	502		16-17		**LS**
BN	600		12-17		**LS**
BN	600	GT	14-15		**LS**
T	600	Tornado Naked	20-20		**LS**
	752	S	20-20		**LS**
	756	Cue	07-12		**LS**
	800	Leoncino	20-20		**LS**
	899	Trek	07-12		**LS**
TnT	899		07-15		**LS**
TnT	899	Century Racer	11-11		**LS**
	900	Tornado TRE	03-06		**LS**
	900	Tornado TRE RS	04-06		**LS**
TnT	1130		05-14		**LS**
TnT	1130	Cafe Racer	05-13		**LS**
TnT	1130	Century Racer	11-12		**LS**
TnT	1130	Officine	07-07		**LS**
TnT	1130	R	17-17		**LS**
TnT	1130	Sport	05-08		**LS**
TnT	1130	Titanium	05-08		**LS**
TnT	1130	Trek	06-12		**LS**
TnT	1130	Trek Amazonas	07-15		**LS**
BIMOTA					
3D	800	Tesi	16-16		**LS**
BB3	1000		14-18		**LS**
DB5	1000	Mille	05-11		**LS**
DB5	1000	S	07-11		**LS**

BIMOTA					
DB6	1000	Delirio	07-09		**LS**
DB10	1078	Bimotard	12-12		**LS**
DB5	1078	RE	12-12		**LS**
DB7	1098		08-08		**LS**
3D	1100	Tesi	07-11		**LS**
DB6R	1100	Delirio	08-09		**LS**
DB8	1198		10-14		**LS**
	1200	Impeto	16-17		**LS**
DB11	1200	VLX	13-13		**LS**
DB12	1200		12-12		**LS**
DB9	1200	Brivido	12-18		**LS**
BOMBARDIER					
	500	Traxter 4x4	99-00	**HF**	**HF**
BRAMMO					
		Empulse	14-16		**LS**
BREMBO RACING CALIPERS					
Goldline 20.6951.50, road					
Supersport 120A44110,					
P2 34					
CAGIVA					
	650	Raptor	01-08		**LS**
	650	V-Raptor	01-08		**LS**
	1000	Raptor	00-08		**LS**
	1000	V-Raptor	00-08		**LS**
	1000	X3 Raptor	04-04		**LS**
	1000	X-Raptor	03-04		**LS**
	1000	Xtra Raptor	02-06		**LS**
DERBI					
GP1	50		05-05	**HF**	
GPR	50	Nude	04-10	**HF**	
GPR	50	Racing	04-13	**HF**	
GP1	125		05-06	**HF**	
GP1	250		05-09	**HF**	
	659	Mulhacen	05-07		**LS**
	659	Mulhacen Cafe	08-08		**LS**
DUCATI					
	620	Multistrada	05-06		**LS**
	620	Multistrada Dark	05-06		**LS**
	620	Sport	03-06		**LS**
	696	Monster	08-12		**LS**
	749	, S	03-07		**LS**
	749	R	04-07		**LS**
	750	Sport	00-02		**LS**
	750	Super Sport	00-02		**LS**
	795	Monster	12-12		**LS**
	796	Hypermotard ABS	10-12		**LS**
	796	Monster	11-14		**LS**
	796	Monster ABS	11-14		**LS**
	800	Sport	03-06		**LS**
	800	Supersport	03-06		**LS**
	821	Hypermotard	13-16		**LS**
	821	Hypermotard ABS	13-16		**LS**
	821	Hypermotard SP	13-16		**LS**
	821	Hypermotard SP ABS	13-16		**LS**
	821	Hyperstrada	13-16		**LS**

DUCATI					
	821	Hyperstrada ABS	13-16		**LS**
	821	Monster	14-21		**LS**
	821	Monster Dark	15-16		**LS**
	821	Monster Stealth	19-21		**LS**
	848		08-10		**LS**
	848	EVO	11-12		**LS**
	848	Streetfighter	12-15		**LS**
	848	Streetfighter S	12-15		**LS**
	899	Panigale	14-15		**LS**
	900	Super Sport	98-02		**LS**
	916	Sport Touring 4	99-01		**LS**
	939	Hypermotard	16-18		**LS**
	939	Hypermotard SP	16-18		**LS**
	939	Hyperstrada	16-16		**LS**
	939	SuperSport	17-21		**LS**
	939	SuperSport S	17-21		**LS**
	944	Sport Touring	98-03		**LS**
	944	ST2	97-03		**LS**
	950	Hypermotard	19-19		**LS**
	950	Hypermotard SP	19-19		**LS**
	955	Panigale V2	20-21		**LS**
	959	Panigale	16-20		**LS**
	959	Panigale Corse	18-20		**LS**
D16RR	990	Desmosedici RR	07-08		**LS**
	992	ST3	04-07		**LS**
	992	ST3s ABS	06-07		**LS**
	996	ST4s	02-06		**LS**
	996	ST4s ABS	03-06		**LS**
	998	Monster S4Rs	06-06		**LS**
	998	Panigale V4 R	19-20		**LS**
	999		03-07		**LS**
	999	Monster S4R	07-08		**LS**
	999	Monster S4RS	07-08		**LS**
	999	R	03-07		**LS**
	999	S	03-07		**LS**
	1000	Hypermotard	06-06		**LS**
	1000	Monster S2R	06-07		**LS**
	1000	Multistrada	07-07		**LS**
	1000	Multistrada DS	03-06		**LS**
	1000	Multistrada S DS	05-06		**LS**
	1000	Supersport DS	03-06		**LS**
	1098		07-08		**LS**
	1098	R	08-10		**LS**
	1098	R Bayliss LE	09-10		**LS**
	1098	S	07-08		**LS**
	1098	Streetfighter	09-14		**LS**
	1098	Streetfighter S	09-13		**LS**
	1100	Hypermotard	07-13		**LS**
	1100	Hypermotard EVO	10-13		**LS**
	1100	Hypermotard EVO SP	10-12		**LS**
	1100	Monster	09-13		**LS**
	1100	Monster ABS	09-10		**LS**
	1100	Monster EVO	11-13		**LS**
	1100	Monster EVO ABS	11-13		**LS**
	1100	Monster S	09-13		**LS**
	1100	Monster S ABS	09-10		**LS**
	1100	Multistrada	07-09		**LS**

Applications for this part number continues on following page.

Available compounds **HF • LS • RQ** **SBS 730**

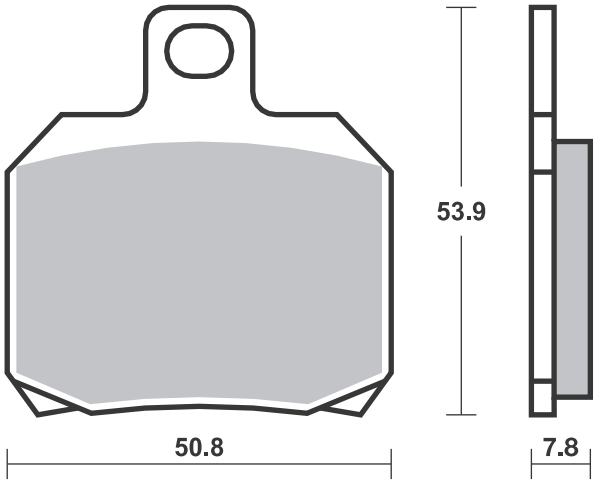

Dimensions in mm / Dimensions en mm • 1” = 25.4 mm , 1 mm = 0.04”

SBS 730 Recommended compound

DUCATI

	1100	Multistrada		
		S	07-09	LS
	1100	Panigale V4	18-20	LS
	1100	Panigale V4		
		S	18-20	LS
	1100	Panigale V4		
		S Corse	19-19	LS
	1100	Panigale V4		
		Speciale	18-19	LS
	1100	Streetfighter		
		V4 S	20-21	LS
	1198		09-13	LS
	1198	S	09-12	LS
	1198	SP	11-12	LS
	1199	Panigale	12-14	LS
	1199	Panigale R	13-15	LS
	1199	Panigale S	12-14	LS
	1199	Superleggera		
			14-14	LS
	1200	Monster	14-21	LS
	1200	Monster 25		
		Anniversario	19-19	LS
	1200	Monster R	16-19	LS
	1200	Monster S	14-21	LS
	1200	Multistrada	10-14	LS
	1200	Multistrada		
		S GT	12-14	LS
	1200	Multistrada		
		S Pikes Peak	11-14	LS
	1200	Multistrada		
		S Sport	10-14	LS
	1200	Multistrada		
		S Touring	10-14	LS
	1299	Panigale	15-17	LS
	1299	Panigale R	15-17	LS
	1299	Panigale R		
		Final Edition	17-20	LS
	1299	Panigale S	15-17	LS
	1299	Panigale S		
		Anniversario	17-17	LS
	1299	Superleggera		
			17-17	LS

ENERGICA

		Ego	15-21	LS
		Eva		
		EsseEsse9	18-21	LS
		Eva Ribelle	15-21	LS

GILERA

	600	Supersport	02-02	LS

HARLEY DAVIDSON

		Livewire	19-21	LS

HONDA

CBR	1000	RR-R		
		Fireblade	20-21	LS
CBR	1000	RR-R SP		
		Fireblade	20-21	LS
RC213V-S	1000		16-18	LS

INDIAN

FTR	1200		19-20	LS
FTR	1200	S	19-20	LS

KAWASAKI

ZX	1000	H2 Carbon		
		Ninja	17-20	LS
ZX	1000	H2 Ninja	15-21	LS
ZX	1000	H2R Ninja	15-20	LS

KTM

RC8	1190		08-11	LS
RC8	1190	R	09-15	LS
RC8	1190	R Track	11-15	LS
	1290	Super Duke GT	16-20	LS
	1290	Super Duke R	14-20	LS
	1290	Superduke R		
		Black	20-20	LS

LAVERDA

TTS	800		99-99	HF
SFC	1000		04-04	LS

MONDIAL

	1000	EVO	04-04	LS
	1000	Piega	03-04	LS
	1000	RZ Nuda	04-04	LS
	1000	Starfighter	04-04	LS

MOTO-GUZZI

	750	Breva	03-09	LS
	750	Nevada		
		Classic ie	06-11	HF
	750	Nevada,		
		Nevada Club	03-16	HF
V7	750	Cafe Classic	10-13	LS
V7	750	Classic	09-12	LS
V7	750	Clubman		
		Racer	10-10	LS
V7	750	Racer	11-11	LS
	850	Breva	06-09	LS
V	1100	Breva	04-04	LS
	1200	MGS-01		
		Corsa	05-13	LS
	1200	Sport 4V	09-11	LS

MOTO-MORINI

	1200	11 1/2	18-18	LS
	1200	9 1/2	06-09	LS
	1200	Corsaro	06-13	LS
	1200	Corsaro ZT	20-20	LS
	1200	Corsaro ZZ	18-20	LS
	1200	Milano	18-19	LS
	1200	Scrambler	18-18	LS
	1200	Sport	08-13	LS
	1200	Super		
		Scrambler	20-20	LS

MOTUS

MST	1650		14-17	LS
MST-R	1650		14-17	LS

MV AGUSTA

	675	Brutale	12-15	LS
	675	F3	13-20	LS
	675	F3 RC	16-20	LS
	800	Brutale	13-20	LS
	800	Brutale		
		Dragster	15-19	LS
	800	Brutale		
		Dragster RC	17-20	LS

MV AGUSTA

	800	Brutale		
		Dragster RR	15-19	LS
	800	Brutale		
		Dragster RR		
		LH44	18-20	LS
	800	Brutale		
		Dragster RR		
		Pirelli	18-20	LS
	800	Brutale RC	18-20	LS
	800	Brutale RR	16-20	LS
	800	F3 RC	16-20	LS
	800	Rivale	13-17	LS
	800	RVS#1	18-20	LS
	800	Stradale	15-16	LS
	800	Superveloce	19-20	LS
	800	Turismo Veloce	14-19	LS
	800	Turismo Veloce		
		Lusso	14-20	LS
	800	Turismo Veloce		
		RC	17-20	LS
	1000	Brutale RR	20-20	LS

NORTON

	961	Commando		
		Cafe Racer	11-14	LS
	961	Commando		
		Cafe Racer		
		MKII	18-19	LS
	961	Commando SE	10-14	LS
	961	Commando SF	13-15	LS
	961	Commando SF		
		Sport	11-15	LS
	961	Commando		
		Sport	18-19	LS
	961	Dominator		
		Naked	17-19	LS
	1200	V4 RR	18-19	LS

VICTORY

		Empulse TT	16-17	LS

Available compounds **HF • LS • RQ** **SBS 730**

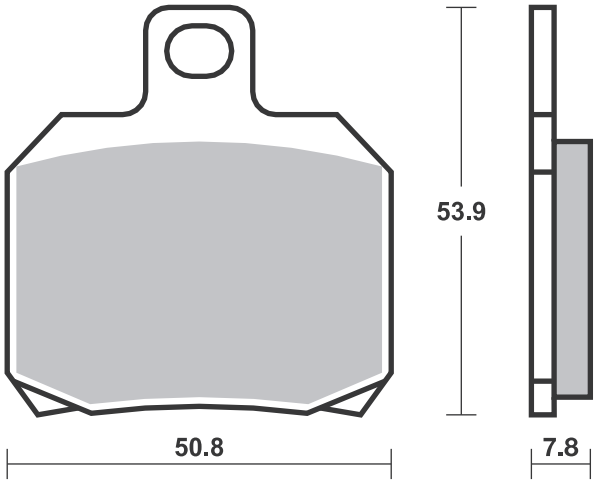

Dimensions in mm / Dimensions en mm • 1” = 25.4 mm , 1 mm = 0.04”

SBS 732 Recommended compound

BREMBO RACING CALIPERS	
Billet P2.24 X20.60.01, racing	

SBS 733 Recommended compound

YAMAHA				
YZF	750	R7 OW02	99-02	**LS**
YZF	1000	R1	98-01	**LS**

SBS 734 Recommended compound

HONDA				
CBR	600	F4, F4 Sport	99-06	**HS**
CBR	600	RR	03-04	**HS**
CBR	900	RR	98-99	**HS**
CBR	900	RR Fireblade	98-03	**HS**
CBR	929	RR	00-01	**HS**
CBR	954	RR	02-03	**HS**
RVT	1000	RC51	00-06	**HS**
VTR	1000	SP-1, SP-2	00-06	**HS**
CB	1100	, EX	14-19	**HS**
CB	1100	EX ABS	17-19	**HS**
CB	1300		05-13	**HS**
CB	1300	R	02-04	**HS**
GL	1800	C Valkyrie	14-15	**HS**

HYOSUNG				
GD	125	EXIV	12-16	**HF**
GD	250	EXIV-R	15-17	**HS**

HYOSUNG				
GT	250	iR	15-15	**HS**
GV	250		17-18	**HS**
GT	300	R	16-17	**HS**
GV	300		16-17	**HS**
GT	650	i	13-13	**HS**
GT	650	i Naked	15-15	**HS**
GT	650	iR	13-15	**HS**
ST	700		11-13	**HS**
ST	700	i Deluxe	13-13	**HS**

Available compounds **RQ** **SBS 732**

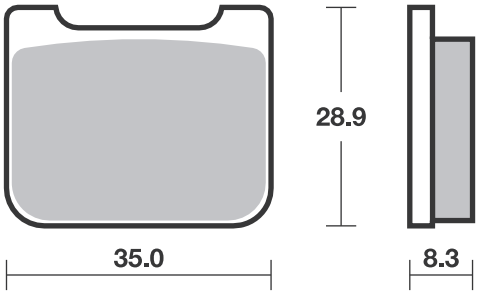

Available compounds **HF • LS • RQ** **SBS 733**

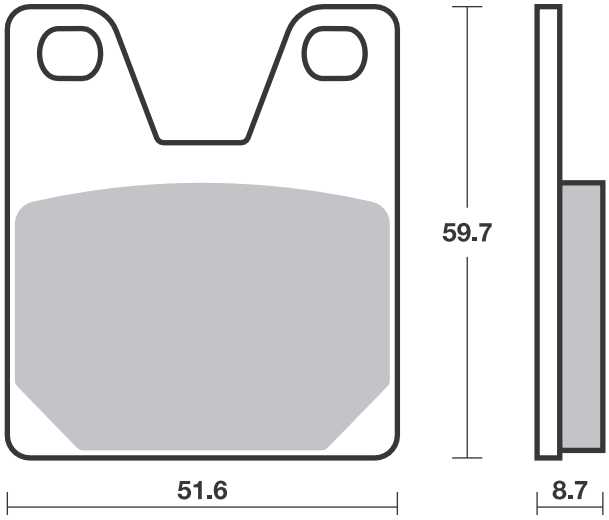

Available compounds **HF • HS • SP • DC • RST** **SBS 734**

HF / HS / SP - Th. 7.2
RST / DC - Th. 8.0

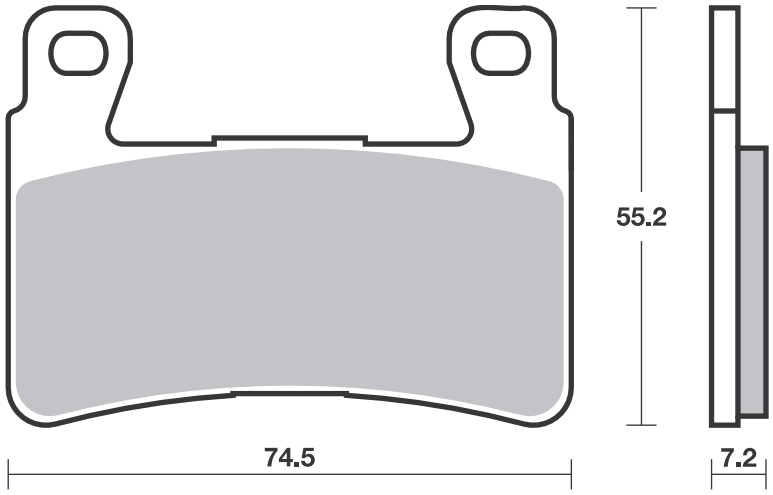

SBS 735 Recommended compound

HONDA					
NT	650	V Deauville	02-05	**HS**	
VFR	800	FI Interceptor, ABS	02-05	**HS**	
VFR	800	Interceptor	98-01	**HS**	
CB	1100	X-11	00-03	**HS**	
CBR	1100	XX Super Blackbird	96-07	**HS**	
ST	1300	, ABS	02-07	**HS**	
GL	1800	Gold Wing	01-17	**HS**	
GL	1800	Gold Wing F6B	13-16	**HS**	
NRX	1800	Valkyrie Rune	04-05	**HS**	
VTX	1800		01-12	**HS**	
KAWASAKI					
EN	650	Vulcan S	15-19	**HS**	
EN	650	Vulcan S Cafe	17-19	**HS**	
EN	650	Vulcan S SE	17-18	**HS**	
VICTORY					
	1731	Vision all models	08-17	**H.HS**	

SBS 736 Recommended compound

HONDA					
NT	650	V Deauville	02-05		**LS**
NT	700	Deauville ABS	06-12		**LS**
NT	700	V Varadero, ABS	10-13		**LS**
VFR	800	FI Interceptor, ABS	02-05		**LS**
VFR	800	Interceptor	98-01		**LS**
VFR	800	Interceptor	06-18		**LS**
VFR	800	Interceptor ABS	06-18		**LS**
CB	1100	X-11	00-03		**LS**
CBR	1100	XX Super Blackbird	96-07		**LS**
VT	1300	CXA A Fury ABS	10-18		**LS**
NRX	1800	Valkyrie Rune	04-05		**LS**
VTX	1800		01-12		**LS**

Available compounds **HF • HS • SP • H.HF • H.CT • H.HS** **SBS 735**

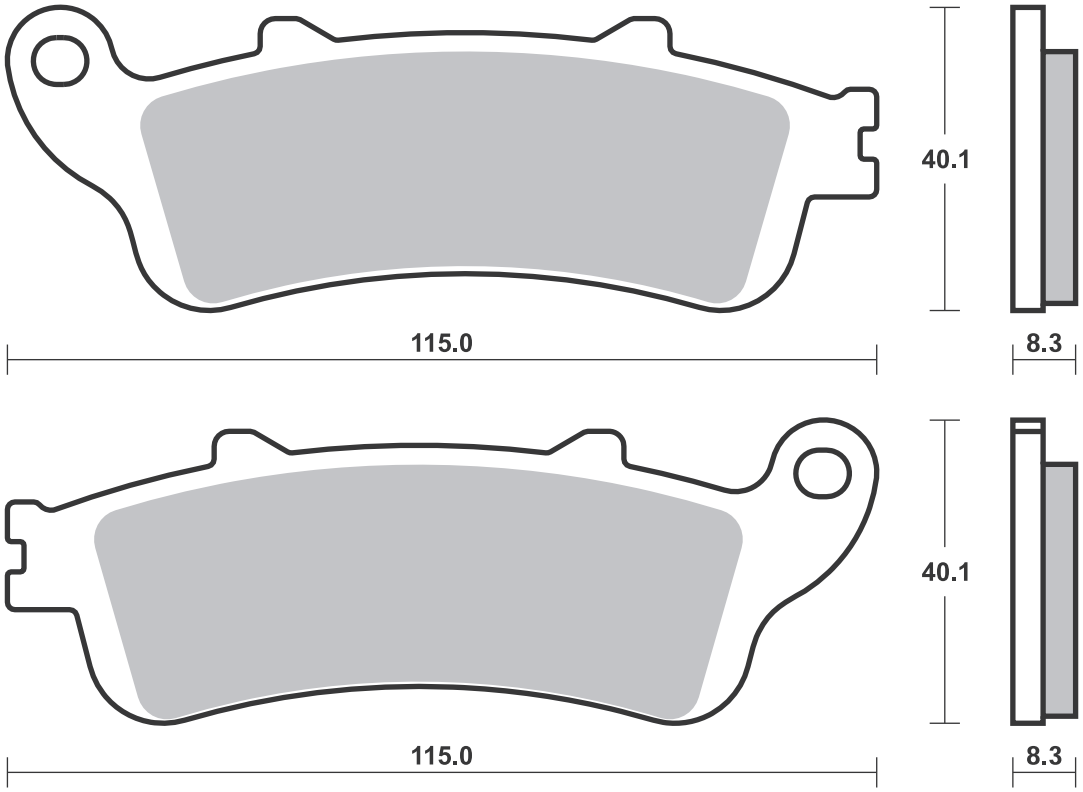

Available compounds **HF • LS** **SBS 736**

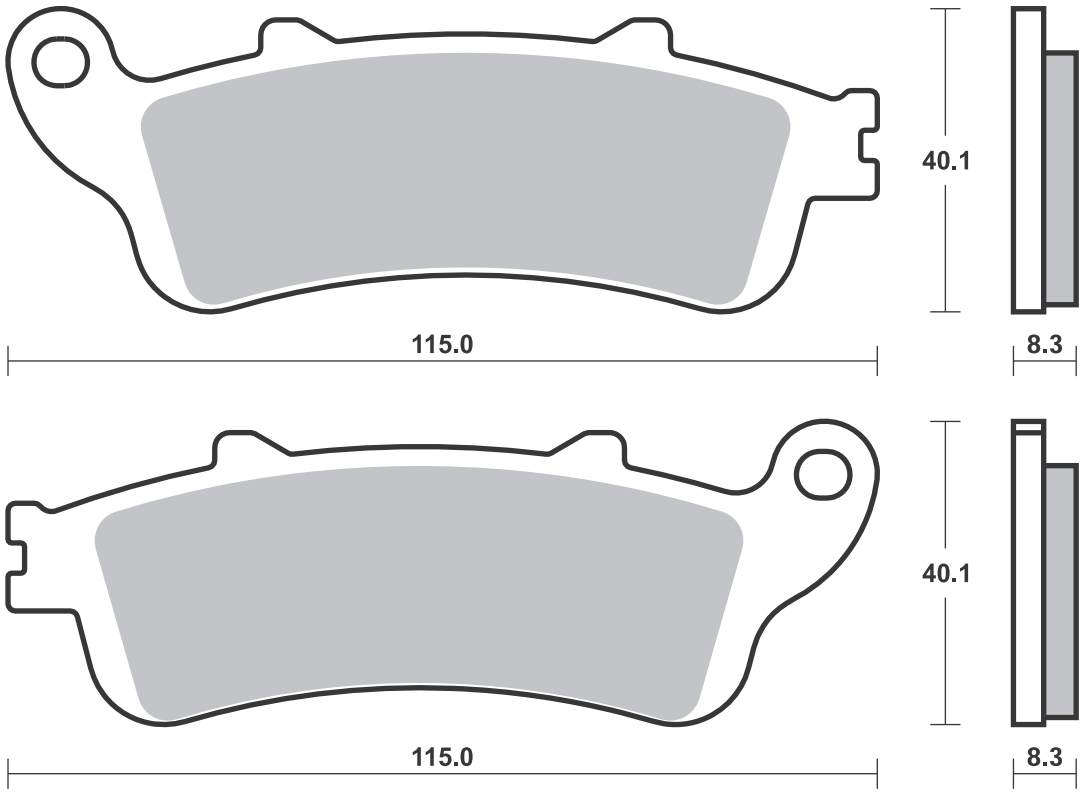

Dimensions in mm / Dimensions en mm • 1” = 25.4 mm , 1 mm = 0.04”

SBS 737 Recommended compound

HARRISON/BILLET CALIPERS	
4 Piston Billet	
Big-6	

SBS 739 Recommended compound

EXCELSIOR-HENDERSON				
1386	Deadwood Special	00-00	**H.HS**	**H.LS**
1386	Super X all models	99-99	**H.HS**	**H.LS**

SBS 740 Recommended compound

TRIUMPH				
1200	Trophy SE	13-18	**HS**	
YAMAHA				
FJR	1300 A	13-20	**HS**	
FJR	1300 ABS	06-12	**HS**	
FJR	1300 AE	16-19	**HS**	
FJR	1300 AS	13-19	**HS**	

Available compounds **HF • H.HF • H.CT** **SBS 737**

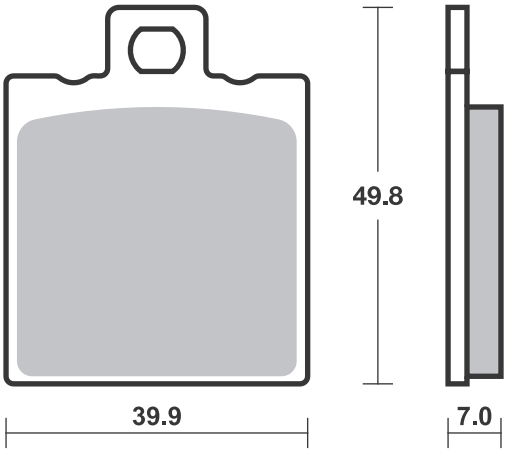

Available compounds **H.HS • H.LS** **SBS 739**

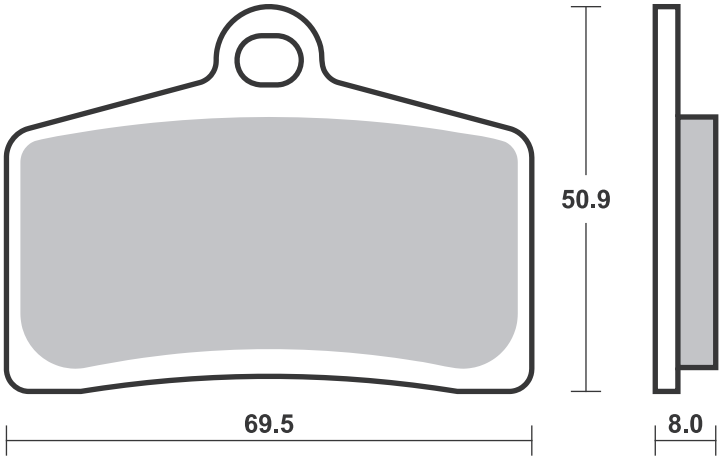

Available compounds **HF • HS • SP** **SBS 740**

1 set = 4 pcs.

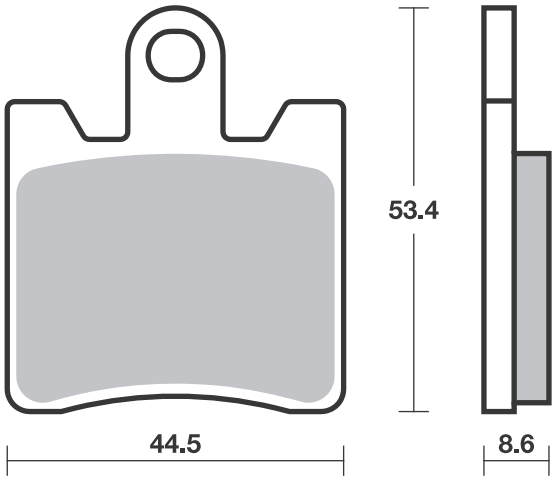

SBS 742 Recommended compound

BMW				
R	850	C	99-01	**LS**
R	850	GS	99-07	**LS**
R	850	R	96-07	**LS**
R	850	RT With		
		Integral ABS	01-06	**LS**
R	900	RT	05-13	**LS**
S	1000	XR	15-21	**LS**
R	1100	GS	99-99	**LS**
R	1100	R Cast		
		wheels	99-01	**LS**
R	1100	R Spoke		
		wheels	99-06	**LS**
R	1100	RT Cast		
		wheels	95-01	**LS**
R	1100	RT Spoke		
		wheels	95-01	**LS**
R	1100	S	99-00	**LS**
R	1100	S With		
		Integral ABS	01-05	**LS**
R	1100	S Without		
		Integral ABS	01-05	**LS**
R1100	1100	GS	94-01	**LS**
R	1150	GS	00-01	**LS**
R	1150	GS		
		(Brembo cal.)	02-05	**LS**
R	1150	GS Adventurer		
		(Tokico cal.)	02-05	**LS**
R	1150	R	01-06	**LS**
R	1150	R Rockster	03-05	**LS**
R	1150	RS	01-04	**LS**

BMW				
R	1150	RT With		
		Integral ABS	01-06	**LS**
	1200	HP2		
		Megamoto	06-08	**LS**
K	1200	R	05-08	**LS**
K	1200	R Sport	05-07	**LS**
K	1200	S	05-08	**LS**
R	1200	C	98-02	**LS**
R	1200	C Classic	03-04	**LS**
R	1200	C Independent	03-04	**LS**
R	1200	C Montauk	02-04	**LS**
R	1200	GS	04-12	**LS**
R	1200	GS Adventure	08-13	**LS**
R	1200	GS Tripple		
		Black	11-16	**LS**
R	1200	R	07-14	**LS**
R	1200	RT	06-13	**LS**
R	1200	S	06-07	**LS**
R	1200	ST	06-07	**LS**
K	1300	R	09-15	**LS**
K	1300	R Dynamic	11-15	**LS**
K	1300	S	09-15	**LS**

SBS 746 Recommended compound

BMW				
K	1200	LT	99-00	**HF**
K	1200	LT With		
		Integral ABS	01-08	**HF**
R	1200	CL	03-04	**HF**

Available compounds **HF • LS • RQ** **SBS 742**

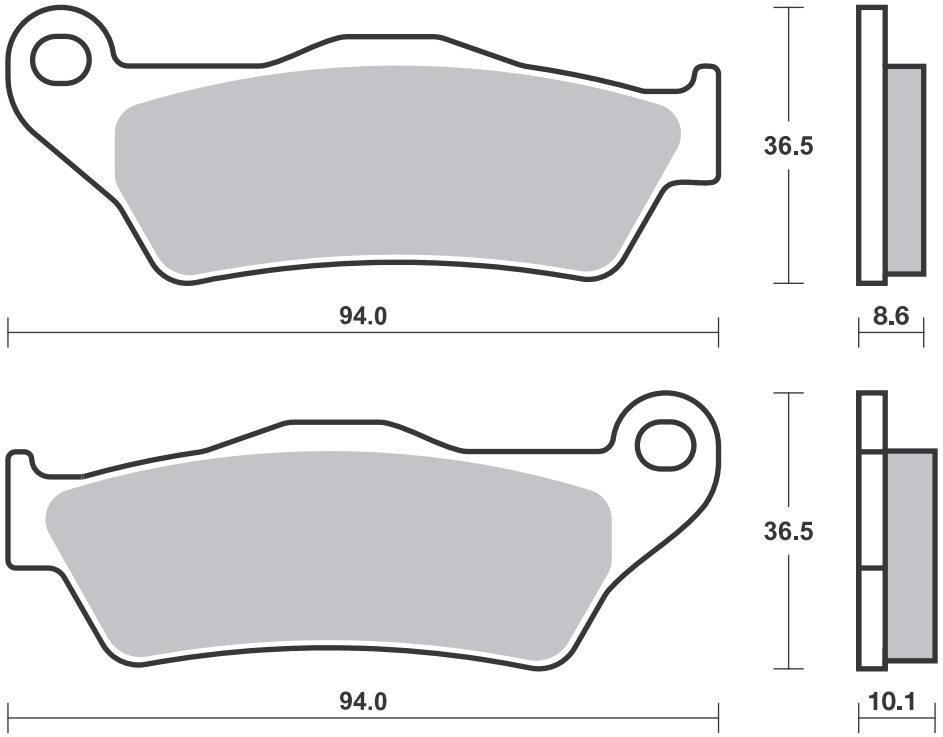

Available compounds **HF** **SBS 746**

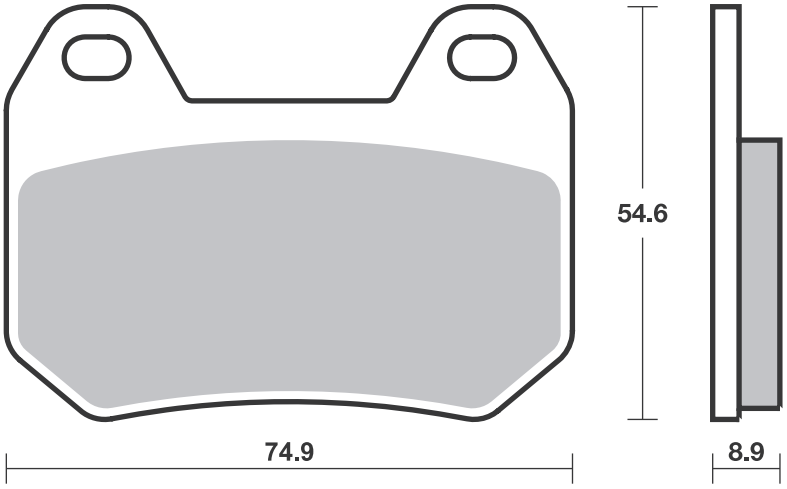

SBS 747 Recommended compound

HYOSUNG			
GD	250 EXIV-R	15-17	**HF**
GT	250 iR	15-15	**HF**
GT	300 R	16-17	**HF**
GT	650 iR	15-15	**HF**

SBS 749 Recommended compound

KYMCO			
	50 MXU	05-10	**HF**
	150 MXU	05-17	**HF**

Available compounds **HF • RQ** **SBS 747**

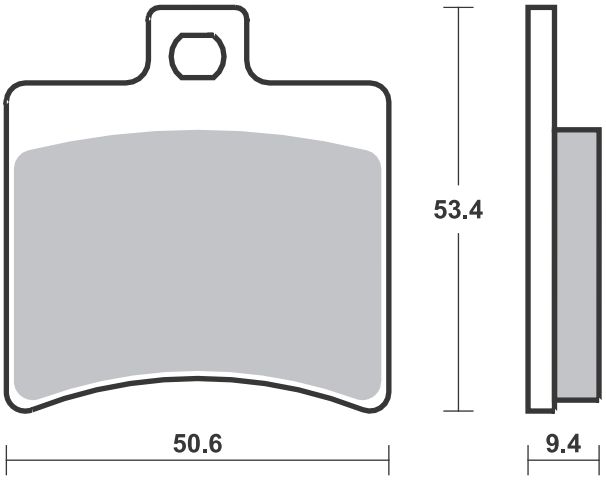

Available compounds **HF • SI** **SBS 749**

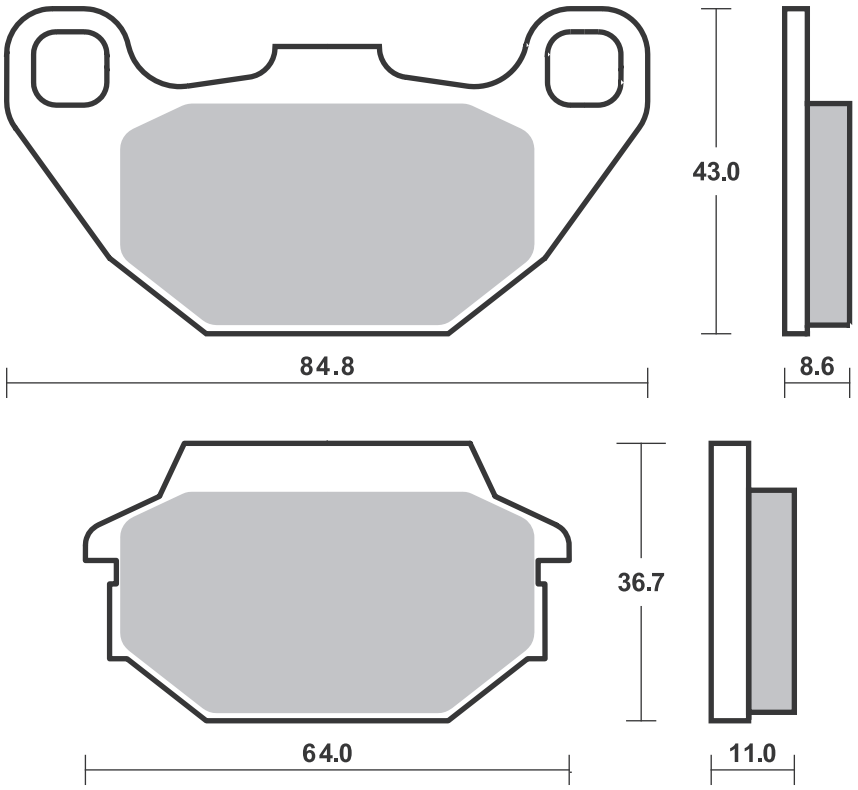

Dimensions in mm / Dimensions en mm • 1” = 25.4 mm , 1 mm = 0.04”

SBS 752 Recommended compound

KAWASAKI					
KX	65		00-21	**RSI**	
SUZUKI					
RM	65		03-06	**RSI**	

SBS 754 Recommended compound

BOMBARDIER					
DS	250		06-06	**SI**	**SI**
	330	Outlander	03-06	**SI**	**SI**
	400	Outlander	03-06	**SI**	**SI**
	400	Outlander Max	03-06	**SI**	**SI**
	500	Quest	02-06	**SI**	**SI**
	500	Traxter 4x4	01-06	**SI**	
	500	Traxter Max	03-05	**SI**	
	650	Quest	02-06	**SI**	**SI**
	650	Quest	02-06	**SI**	**SI**
	650	Quest	02-06		**SI**
	650	Quest	02-06		**SI**
	650	Quest Max	03-06	**SI**	
	650	Traxter Max	03-05	**SI**	
DS	650		01-06	**SI**	**SI**
	800	Outlander	06-06	**SI**	**SI**
	800	Outlander XT	06-06	**SI**	**SI**
CAN-AM					
	400	Outlander EFi	09-14	**SI**	**SI**
	400	Outlander MAX STD	07-13	**SI**	**SI**
	400	Outlander MAX XT	07-13	**SI**	**SI**
	400	Outlander STD	07-14	**SI**	**SI**
	400	Outlander XT	07-14	**SI**	**SI**
	500	Outlander MAX STD	07-12	**SI**	**SI**
	500	Outlander MAX XT	07-12	**SI**	**SI**
	500	Outlander STD	07-12	**SI**	**SI**
	500	Outlander XT	07-12	**SI**	**SI**
	500	Renegade	08-11	**SI**	**SI**
	650	Outlander MAX STD	07-12	**SI**	**SI**
	650	Outlander MAX XT	07-12	**SI**	**SI**
	650	Outlander STD	07-12	**SI**	**SI**
	650	Outlander XT	07-12	**SI**	**SI**
	800	Commander MAX R EFI	18-20		**PSI**
	800	Commander R EFI	18-18		**PSI**
	800	Outlander MAX LTD	07-11	**SI**	**SI**
	800	Outlander MAX STD	07-11	**SI**	**SI**
	800	Outlander MAX XT	07-11	**SI**	**SI**
	800	Outlander STD	07-11	**SI**	**SI**
	800	Outlander XT	07-11	**SI**	**SI**
	800	Renegade	08-11	**SI**	**SI**
	800	Renegade EFi	07-11	**SI**	**SI**
	800	Renegade X	08-11	**SI**	**SI**
	1000	Commander	16-17		**PSI**
	1000	Commander MAX	14-17		**PSI**
	1000	Commander MAX R EFI	18-19		**PSI**
	1000	Commander R EFI	18-20		**PSI**
	1000	Maverick	14-18		**PSI**
	1000	Maverick MAX	14-18		**PSI**
CANNONDALE					
	440	Blaze	03-03	**SI**	**SI**
	440	Cannibal	03-03	**SI**	**SI**
	440	Glamis	03-03	**SI**	**SI**
	440	Moto	03-03	**SI**	**SI**
	440	Speed	03-03	**SI**	**SI**
JOHN DEERE					
	500	Buck	05-05	**SI**	
	500	Buck EX, EXT	05-05	**SI**	
	500	Trail Buck	05-05	**SI**	
	650	Trail Buck	05-05	**SI**	
	650	Trail Buck EX, EXT	05-05	**SI**	
YAMAHA					
YFM	400	FAM Kodiak	00-02		**SI**
YFM	400	FWN Big Bear 4WD	00-11		**SI**
YFM	400	FWNH Big Bear-Buckmaster 4WD	00-11		**SI**
YFM	400	N Big Bear 2WD	00-11		**SI**
YFM	450	FA Kodiak	03-07		**SI**
YFM	450	Wolverine	06-10		**SI**

Available compounds **CS • SI • RSI** **SBS 752**

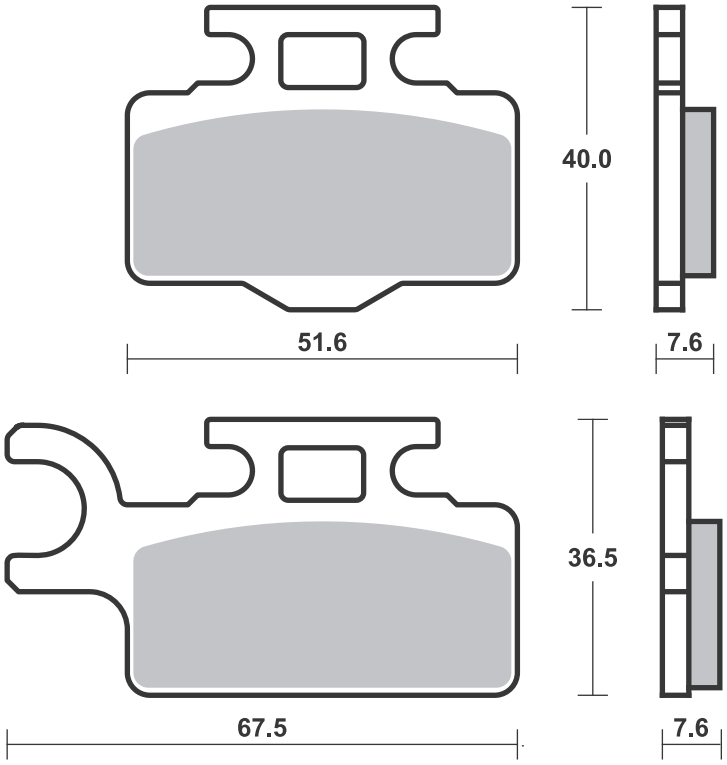

Available compounds **HF • SI • RSI • PSI** **SBS 754**

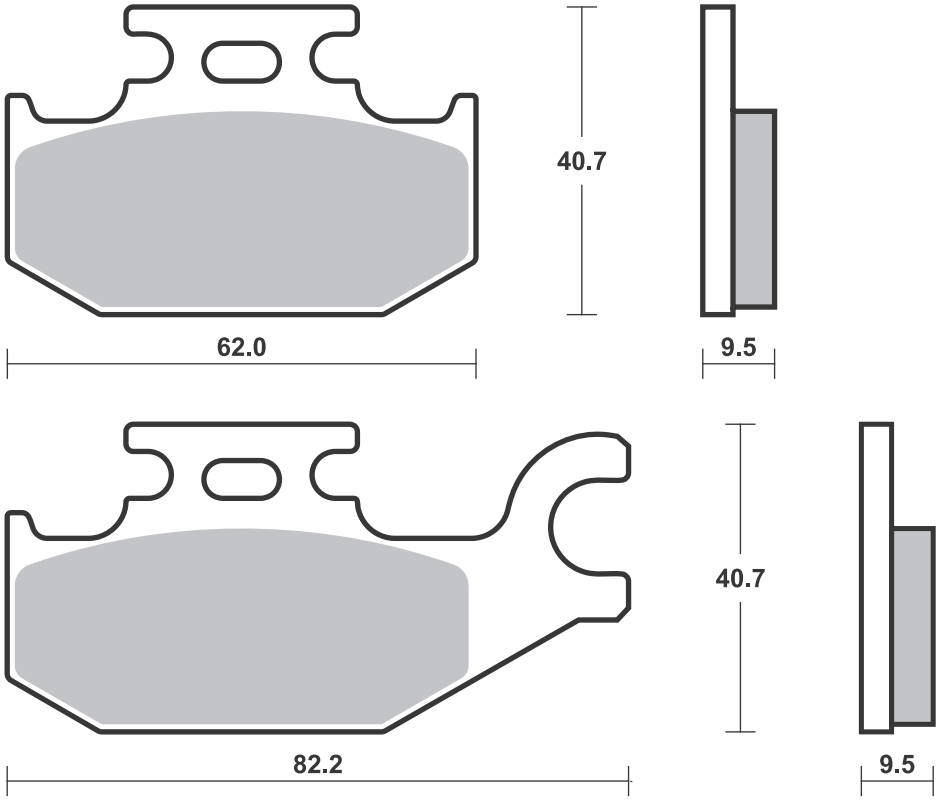

SBS 755 Recommended compound

POLARIS			
250	Trail Blazer	99-07	**ATS**
250	Xplorer 4x4	00-02	**ATS**
325	Magnum 2x4,		
	4x4	00-02	**ATS**
325	Trail Boss	00-02	**ATS**
325	Xpedition	00-01	**ATS**
330	Trail Boss	03-14	**ATS**
335	Sportsman		
	4x4	99-02	**ATS**
400	Scrambler 2x4,		
	4x4	00-03	**ATS**
400	Scrambler 4x4	99-03	**ATS**
400	Sport	99-00	**ATS**
400	Sportsman	01-13	**ATS**
400	Trail Blazer	03-04	**ATS**
400	Xplorer L 4x4	00-02	**ATS**
425	Xpedition 4x4	00-03	**ATS**
455	Diesel EBS		
	4x4	99-01	**ATS**
500	Magnum 4x4	00-01	**ATS**
500	Scrambler 2x4	01-02	**ATS**
500	Scrambler 4x4	98-13	**ATS**
500	Sportsman		
	EBS 4x4	98-02	**ATS**

SBS 756 Recommended compound

POLARIS			
400	Big Boss L 6x6		
	Middle Axle		
	Brake	96-96	**ATS**
425	Magnum 6x6		
	Middle Axle		
	Brake	96-96	**ATS**

Available compounds **SI • RSI • ATS** **SBS 755**

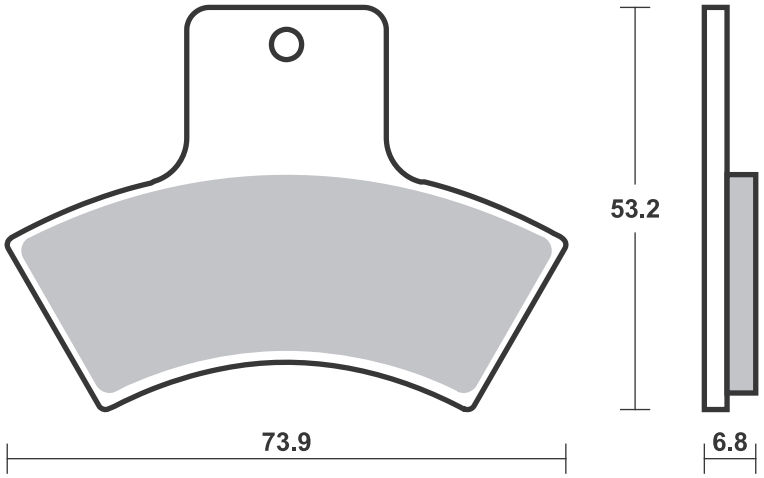

Available compounds **SI • RSI • ATS** **SBS 756**

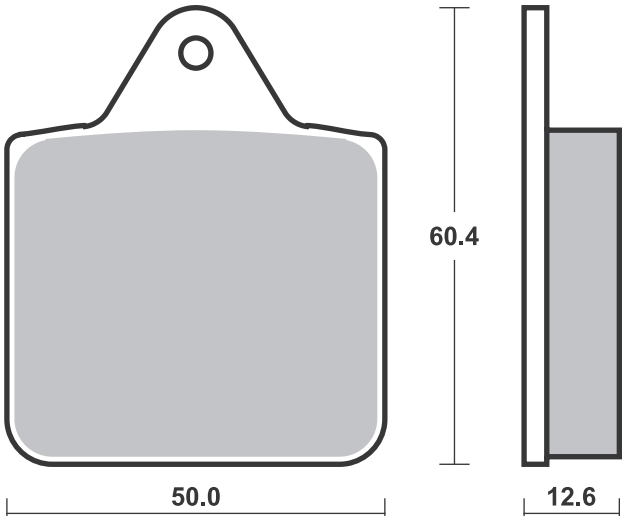

Dimensions in mm / Dimensions en mm • 1” = 25.4 mm , 1 mm = 0.04”

SBS 757 Recommended compound

POLARIS	
500 Sportsman 6x6 00-11	**ATS**

SBS 758 Recommended compound

ARCTIC CAT				
250	2x4/4x4	99-04	**ATS**	**ATS**
300	2x4/4x4	98-04	**ATS**	**ATS**
375	2x4/4x4	02-02	**ATS**	**ATS**
400	2x4/4x4	98-04	**ATS**	**ATS**
400	2x4/4x4 (FIS)	02-04	**ATS**	**ATS**
400	2x4/4x4 (FIS) (Man. Hand Brake)	05-08		**ATS**
400	TBX 4x4	04-04	**ATS**	**ATS**
440	Bear Cat	96-97		**ATS**
454	Arctic Cat 4x4	98-98	**ATS**	**ATS**
454	Bear Cat 2x4/4x4	96-98	**ATS**	**ATS**
500	2x4/4x4	98-04	**ATS**	**ATS**
500	2x4/4x4 (FIS)	02-04	**ATS**	**ATS**
500	TBX 4x4	02-04	**ATS**	**ATS**
500	TRV 4x4	03-04	**ATS**	**ATS**
LAVERDA				
HP 125	Quasar	04-04		**ATS**
HP 180	Quasar	04-04		**ATS**
400	Quasar 4x4	04-04	**ATS**	**ATS**
500	Quasar 4x4	04-04	**ATS**	**ATS**
500	Quasar 4x4 C	04-04	**ATS**	**ATS**

Available compounds **SI • RSI • ATS** **SBS 757**

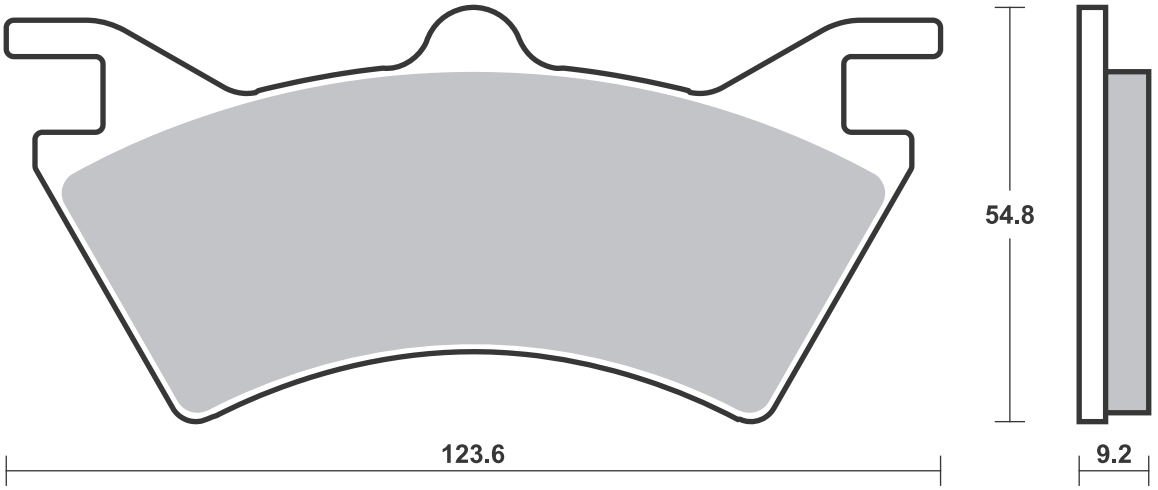

Available compounds **SI • RSI • ATS** **SBS 758**

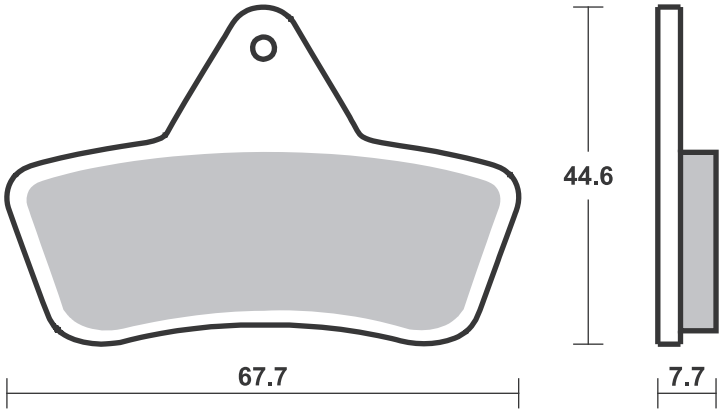

SBS 759 Recommended compound

BREMBO RACING CALIPERS	
Racing rear X206001, P2 24	

SBS 762 Recommended compound

APRILIA					
RSV	1000	Factory Pista	04-04	**HS**	
RSV	1000	Mille	02-03	**HS**	
RSV	1000	Mille Nera	04-04	**HS**	
RSV	1000	Mille R	01-07	**HS**	
RSV	1000	Mille R Factory	04-05	**HS**	
RSV	1000	Tuono R	03-03	**HS**	
RSV	1000	Tuono R Factory, ABS	06-12	**HS**	
BENELLI					
	500	C	19-19	**HS**	
TRK	502		18-19	**HS**	
BN	600		14-17	**HS**	
BN	600	GT	14-15	**HS**	
T	600	Tornado Naked	20-20	**HS**	
	756	Cue	07-09	**HS**	
TnT	899	Century Racer	11-11	**HS**	
	900	Tornado TRE	03-06	**HS**	
	900	Tornado TRE RS	04-06	**HS**	
TnT	1130	Cafe Racer	05-13	**HS**	
TnT	1130	Century Racer	11-12	**HS**	
TnT	1130	Officine	07-07	**HS**	
TnT	1130	Sport	05-08	**HS**	
TnT	1130	Titanium	05-08	**HS**	
BIMOTA					
DB5	1000	Mille	05-11	**SP**	
DB5	1000	S	07-11	**SP**	
DB6	1000	Delirio	07-09	**HS**	
SB8K	1000	Santamonica	07-09	**HS**	
DB10	1078	Bimotard	12-12	**HS**	
DB5	1078	RE	12-12	**HS**	
DB7	1098		08-08	**HS**	
3D	1100	Tesi	07-11	**SP**	
DB6R	1100	Delirio	08-09	**HS**	
DB12	1200		12-12	**HS**	
DB9	1200	Brivido	12-18	**HS**	
BMW					
G	450	SMR	09-10	**RST**	

BREMBO RACING CALIPERS					
Goldline 4 pad 20.7850.11/21, road					
Motard Axial XA32950, P4 34					
CAGIVA					
	1000	X3 Raptor	04-04	**HS**	
	1000	X-Raptor	03-04	**HS**	
DERBI					
	659	Mulhacen	06-07	**HS**	
	659	Mulhacen Cafe	08-08	**HS**	
DUCATI					
	748	R	01-02	**HS**	
	749	, S	03-07	**HS**	
	749	R	04-07	**HS**	
	996	R	01-01	**HS**	
	998	Monster S4Rs	06-06	**HS**	
	998	R	02-04	**HS**	
	999		03-07	**HS**	
	999	Monster S4R	07-08	**HS**	
	999	Monster S4RS	07-08	**HS**	
	999	R	03-07	**HS**	
	999	S	03-07	**HS**	
	1000	Hypermotard	06-06	**HS**	
GILERA					
	600	Supersport	02-02	**HS**	
SMR	449		11-13	**RST**	
SM	450	R	05-13	**RST**	
SM	450	RR	06-10	**RST**	
SM	510	Centennial	06-06	**RST**	
SM	510	R	05-10	**RST**	
SMR	511		11-13	**RST**	
SM	610	ie	07-10	**RST**	
SM	630		10-10	**HS**	
STR	650	CRC	07-07	**HF**	
SM	701	Supermoto	15-20	**HS**	

HYOSUNG					
RX	450	SM	08-11	**HS**	
KTM					
	690	Duke	08-11	**HS**	
	690	Duke R	10-11	**HS**	
	690	SM	07-11	**HS**	
	690	SMC	08-10	**HS**	
	690	SMC R	14-20	**HS**	
	690	Supermoto R	08-09	**HS**	
	950	SM	05-07	**HS**	
	950	SM R	07-09	**HS**	
	990	Super Duke	04-13	**HS**	
	990	Super Duke R	09-13	**HS**	
	990	Supermoto	07-11	**HS**	
	990	Supermoto T	09-13	**HS**	
LAVERDA					
SFC	1000		04-04	**HS**	
MONDIAL					
	1000	EVO	04-04	**HS**	
	1000	Piega	03-04	**HS**	
	1000	RZ Nuda	04-04	**HS**	
	1000	Starfighter	04-04	**HS**	
MOTO-GUZZI					
	1200	MGS-01 Corsa	05-13	**SP**	
MOTO-MORINI					
	1200	Granferro	10-10	**HS**	
MV AGUSTA					
	910	Brutale R	06-08	**HS**	
	1000	F4 R	06-07	**HS**	
NORTON					
	961	Commando Cafe Racer	11-14	**HS**	
	961	Commando SE	12-14	**HS**	
	961	Commando SF	13-15	**HS**	

Applications for this part number continues on following page.

Available compounds **RQ** **SBS 759**

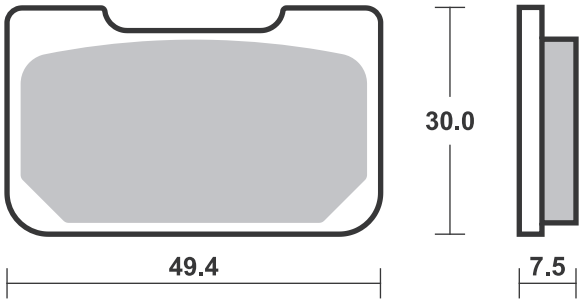

Available compounds **HF • HS • SP • DC • RST • DS-1** **SBS 762**

1 set = 4 pcs.

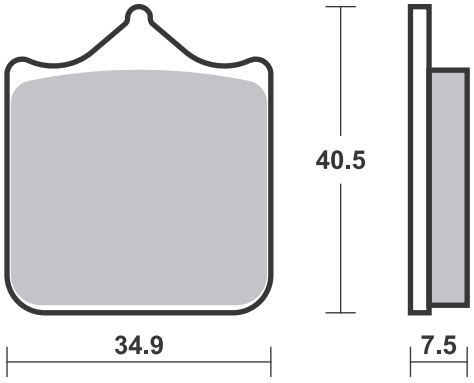

SBS 762 Recommended compound

SHERCO					
SM	450	4.5i			
		Supermotard	06-06	**RST**	
SWM					
	440	Gran Milano	18-18	**HS**	
SM	450	R	15-17	**HS**	
	500	Ace of Spades	20-20	**HS**	
	500	Gran Milano			
		Outlaw	20-20	**HS**	
SM	500	R	18-20	**HS**	
	650	Superdual	15-18	**HS**	
TM					
SMX	450	F	04-04	**RST**	
SMX	660	F	04-04	**RST**	

TRIUMPH					
	900	Street			
		Scrambler	19-20	**HS**	
	900	Street Twin	19-20	**HS**	
	1050	Speed 94	15-16	**HS**	
	1050	Speed Triple	08-15	**HS**	
	1200	Speed Twin	20-20	**SP**	

SBS 763 Recommended compound

MV AGUSTA				
	675	F3	11-12	**LS**
	750	Brutale,		
		Brutale S	01-05	**LS**
	750	F4 SPR	01-03	**LS**
	750	F4/F4S	99-02	**LS**
	800	F3	14-20	**LS**
	910	Brutale	06-08	**LS**
	910	Brutale R	06-08	**LS**
	910	Brutale S	06-08	**LS**
	920	Brutale	12-14	**LS**
	989	Brutale R	09-09	**LS**
	990	Brutale R	10-11	**LS**
	1000	F4 LH44	18-20	**LS**
	1000	F4 Mamba	04-06	**LS**
	1000	F4 R	06-07	**LS**
	1000	F4 R	12-19	**LS**
	1000	F4 RC	15-20	**LS**

MV AGUSTA				
	1000	F4 RR	12-20	**LS**
	1000	F4 Tamburini	04-06	**LS**
	1000	F4S	04-06	**LS**
	1078	Brutale RR	09-09	**LS**
	1078	F4 CC	08-11	**LS**
	1078	F4 RR	08-11	**LS**
	1090	Brutale Corse	14-16	**LS**
	1090	Brutale R	12-15	**LS**
	1090	Brutale RR	10-17	**LS**

SBS 765 Recommended compound

SUZUKI				
GSX-R	600		04-05	**LS**
GSF	650	Bandit /		
		S Bandit	05-05	**LS**
GSX-R	750		04-05	**LS**
GSX-R	1000		01-06	**LS**
GSX	1400		02-07	**LS**

Available compounds **HF • HS • SP • DC • RST • DS-1** **SBS 762**

1 set = 4 pcs.

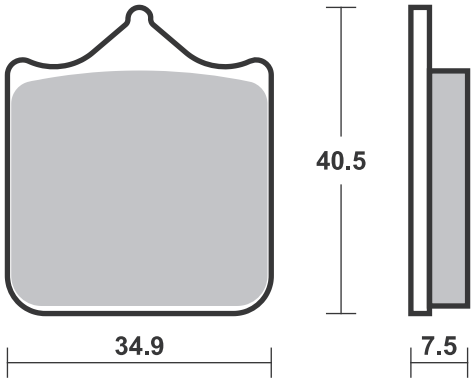

Available compounds **HF • LS • RQ** **SBS 763**

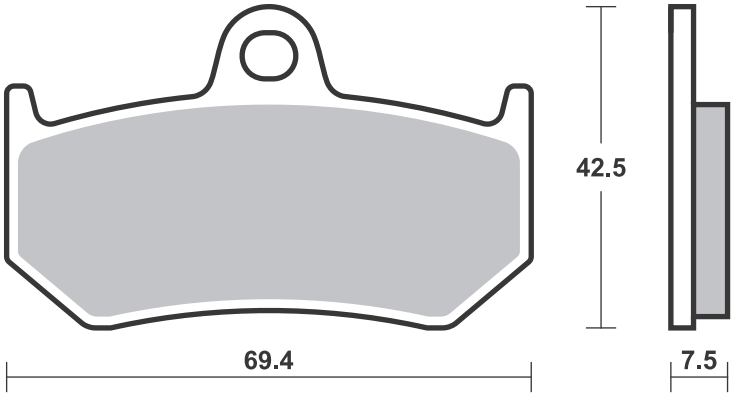

Available compounds **HF • LS • RQ** **SBS 765**

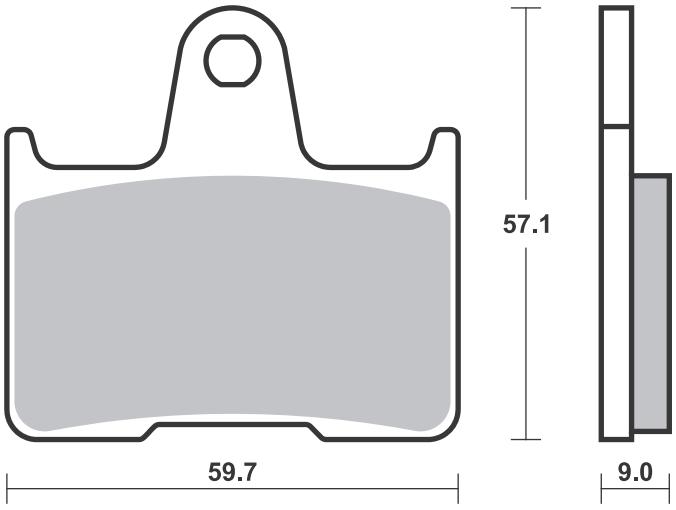

SBS 766 Recommended compound

NISSIN	
3 Piston Racing Rear Caliper	

SBS 767 Recommended compound

BOMBARDIER					
DS	250	06-06	**SI**		
	330 Outlander	03-06	**SI**		
	400 Outlander	03-06	**SI**		
	400 Outlander Max	03-06	**SI**		
	500 Quest	02-06	**SI**		
	500 Traxter 4x4	01-06	**SI**	**SI**	
	500 Traxter Max	03-05	**SI**	**SI**	
	650 Quest	02-06	**SI**		
	650 Quest	02-06	**SI**		
	650 Quest Max	03-06	**SI**	**SI**	
	650 Traxter Max	03-05	**SI**	**SI**	
DS	650	01-06	**SI**		
	800 Outlander	06-06	**SI**		
	800 Outlander XT	06-06	**SI**		
CAN-AM					
	400 Outlander EFi	09-14	**SI**		
	400 Outlander MAX STD	07-13	**SI**		
	400 Outlander MAX XT	07-13	**SI**		
	400 Outlander STD	07-14	**SI**		
	400 Outlander XT	07-14	**SI**		
	500 Outlander MAX STD	07-12	**SI**		
	500 Outlander MAX XT	07-12	**SI**		
	500 Outlander STD	07-12	**SI**		
	500 Outlander XT	07-12	**SI**		
	500 Renegade	08-11	**SI**		
	650 Outlander MAX STD	07-12	**SI**		
	650 Outlander MAX XT	07-12	**SI**		
	650 Outlander STD	07-12	**SI**		
	650 Outlander XT	07-12	**SI**		
	800 Outlander MAX LTD	07-11	**SI**		
	800 Outlander MAX STD	07-11	**SI**		
	800 Outlander MAX XT	07-11	**SI**		

CAN-AM					
	800 Outlander STD	07-11	**SI**		
	800 Outlander XT	07-11	**SI**		
	800 Renegade	08-11	**SI**		
	800 Renegade EFi	07-11	**SI**		
	800 Renegade X	08-11	**SI**		
CANNONDALE					
	440 Blaze	03-03	**SI**		
	440 Cannibal	03-03	**SI**		
	440 Glamis	03-03	**SI**		
	440 Moto	03-03	**SI**		
	440 Speed	03-03	**SI**		
HISUN					
HS	400 UTV	15-17		**SI**	
HS	500 UTV	15-17		**SI**	
HS	700 UTV	15-17		**SI**	
JOHN DEERE					
	500 Buck	05-05	**SI**	**SI**	
	500 Buck EX, EXT	05-05	**SI**	**SI**	
	500 Trail Buck	05-05	**SI**	**SI**	
	650 Trail Buck	05-05	**SI**	**SI**	
	650 Trail Buck EX, EXT	05-05	**SI**	**SI**	

Available compounds **LS** **SBS 766**

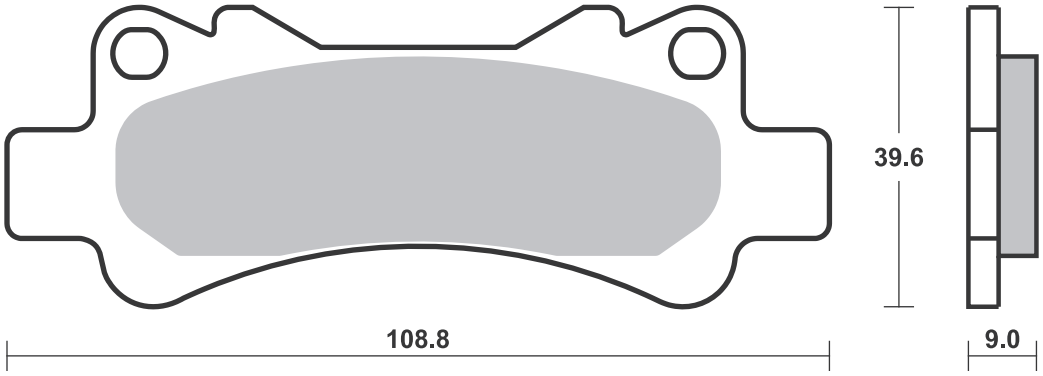

Available compounds **SI • RSI** **SBS 767**

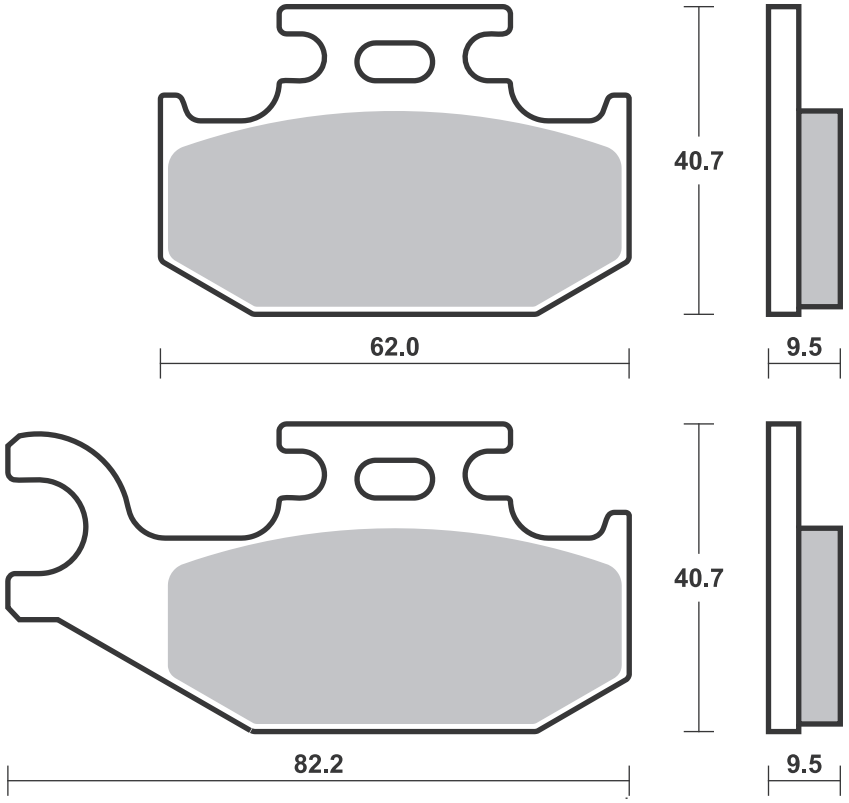

SBS 769 Recommended compound

HYOSUNG				
GV	650	Aguila	04 - 05	**HF**
YAMAHA				
XVS	650	V-Star	09 - 14	**LS**
XVS	650	V-Star Tourer	09 - 14	**LS**
SCR	950	Scrambler	17 - 19	**LS**
XV	950	Bolt	14 - 18	**LS**
XV	950	Bolt C-Spec	15 - 18	**LS**
XV	950	Bolt Racer	17 - 18	**LS**
XV	950	Bolt R-Spec	14 - 21	**LS**
XVS	950	A Midnight		
		Star	09 - 13	**LS**
XT	1200	Z Super Tenere	14 - 19	**LS**
XT	1200	ZE Super		
		Tenere	14 - 19	**LS**
XT	1200	ZE Super		
		Tenere Raid Ed.	18 - 19	**LS**
XTZ	1200	Super Tenere	10 - 13	**LS**
FJR	1300		01 - 03	**LS**
FJR	1300	A	13 - 20	**LS**
FJR	1300	ABS	03 - 12	**LS**
FJR	1300	AE	16 - 19	**LS**
FJR	1300	AS	13 - 19	**LS**
XVS	1300	A Midnight		
		Star	07 - 11	**LS**
XVS	1300	Custom	14 - 16	**LS**
XVS	1300	Stryker	11 - 14	**LS**
XVS	1300	Stryker Bullet		
		Cowl	15 - 15	**LS**
XVS	1300	V-Star	07 - 14	**LS**

YAMAHA				
XVS	1300	V-Star Deluxe	07 - 14	**LS**
XVS	1300	V-Star Tourer	07 - 14	**LS**
VMX	1700	V-Max	09 - 18	**LS**
XV	1700	PC Road Star		
		Warrior	03 - 07	**LS**
XV	1900	Raider	08 - 14	**LS**
XV	1900	Raider Bullet		
		Cowl	15 - 15	**LS**
XV	1900	Raider S	08 - 14	**LS**
XV	1900	Raider SCL	12 - 14	**LS**
XV	1900	Roadliner	06 - 14	**LS**
XV	1900	Roadliner S	06 - 14	**LS**
XV	1900	Stratoliner	06 - 09	**LS**
XV	1900	Stratoliner		
		Deluxe	11 - 14	**LS**
XV	1900	Stratoliner S	06 - 14	**LS**

SBS 770 Recommended compound

YAMAHA				
FZS	1000	Fazer	01 - 05	**LS**
XJR	1300	Racer	15 - 19	**LS**

Available compounds **HF • LS** **SBS 769**

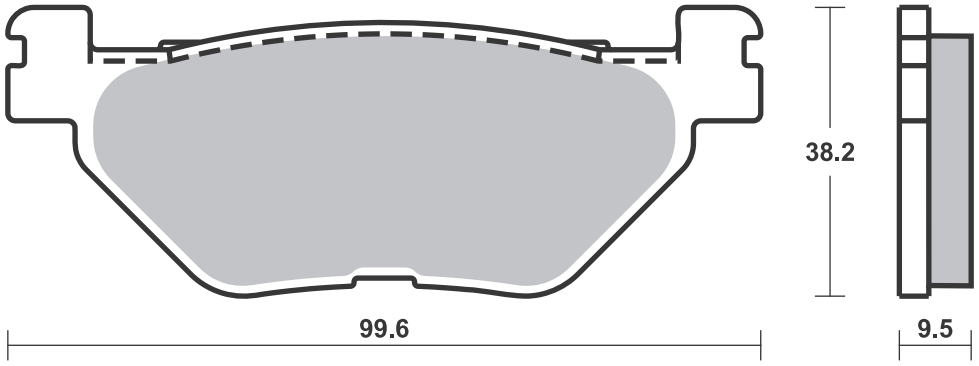

Available compounds **HF • LS** **SBS 770**

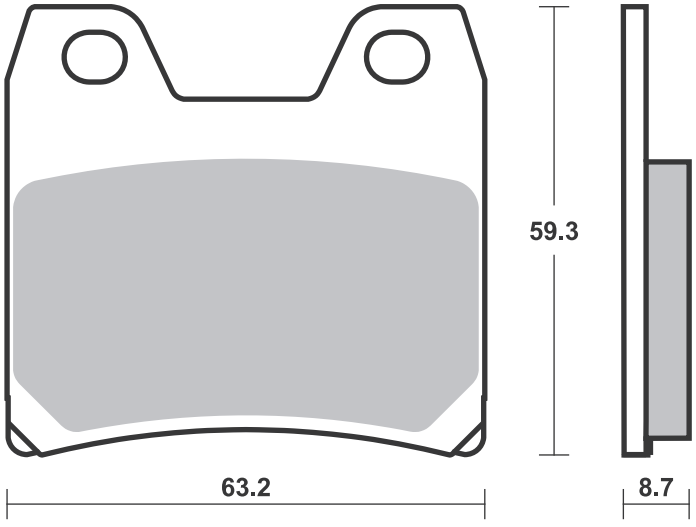

SBS 771 Recommended compound

BERINGER	
6 Piston Caliper	

SBS 772 Recommended compound

DERBI			
GP1	250	05- 09	**HF**

SBS 773 Recommended compound

SCORPA			
	250 T-Ride	08- 11	**HF**

Available compounds **HF • HS • RQ** **SBS 771**

1 set = 6 pcs.

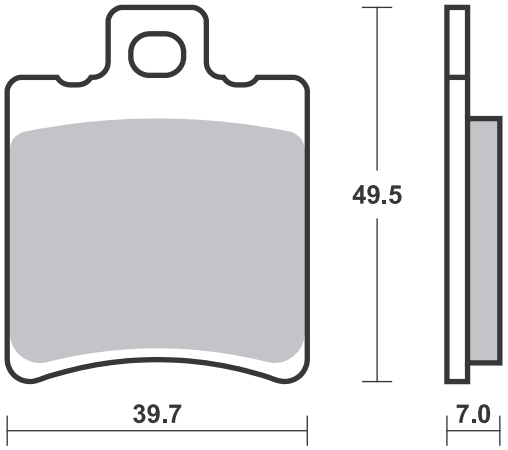

Available compounds **HF** **SBS 772**

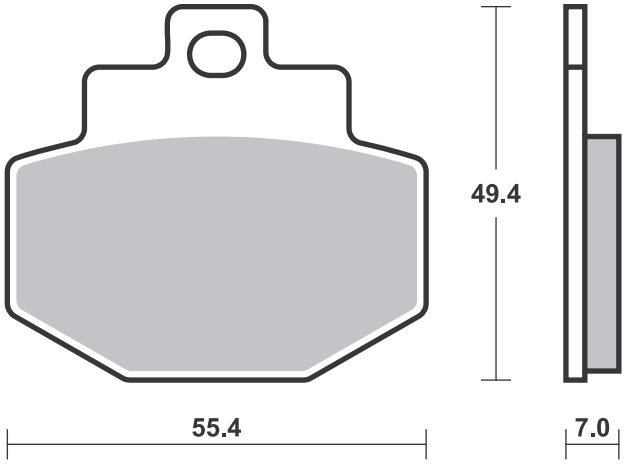

Available compounds **HF** **SBS 773**

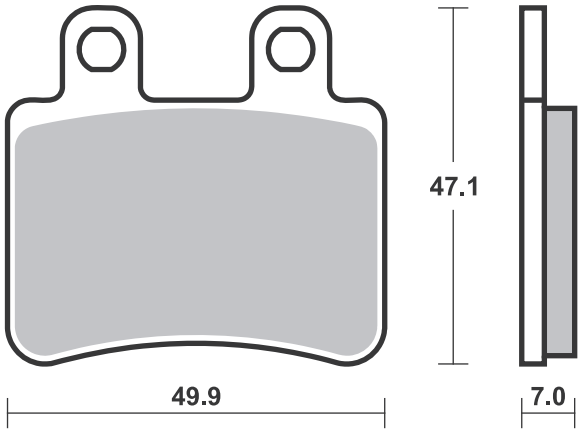

SBS 774 Recommended compound

BETA				
ALP	125	4-stroke	06-09	**HF**
ALP	200	4-stroke	06-20	**HF**
ALP	350	4.0	04-18	**HF**
DERBI				
	125	Mulhacen	07-07	**HF**
	125	Senda R 4T	04-12	**HF**
	125	Senda X-Treme SM 4T	04-05	**HF**
GAS GAS				
	125	Pampera	04-13	**HF**
	250	Pampera	02-13	**HF**
	280	Pampera	04-08	**HF**
KEEWAY				
	125	Enduro	07-08	**HF**
	125	X-Ray	07-08	**HF**

SBS 775 Recommended compound

ARCTIC CAT				
	250	DVX	06-09	**SI**
	300	DVX	09-16	**SI**
KYMCO				
	250	MXU	06-14	**SI**
	250	Urban Quad	06-06	**SI**
KXR	250		04-14	**SI**
	300	Maxxer	06-13	**SI**
	300	Maxxer Supermoto	15-15	**SI**

Available compounds **HF** **SBS 774**

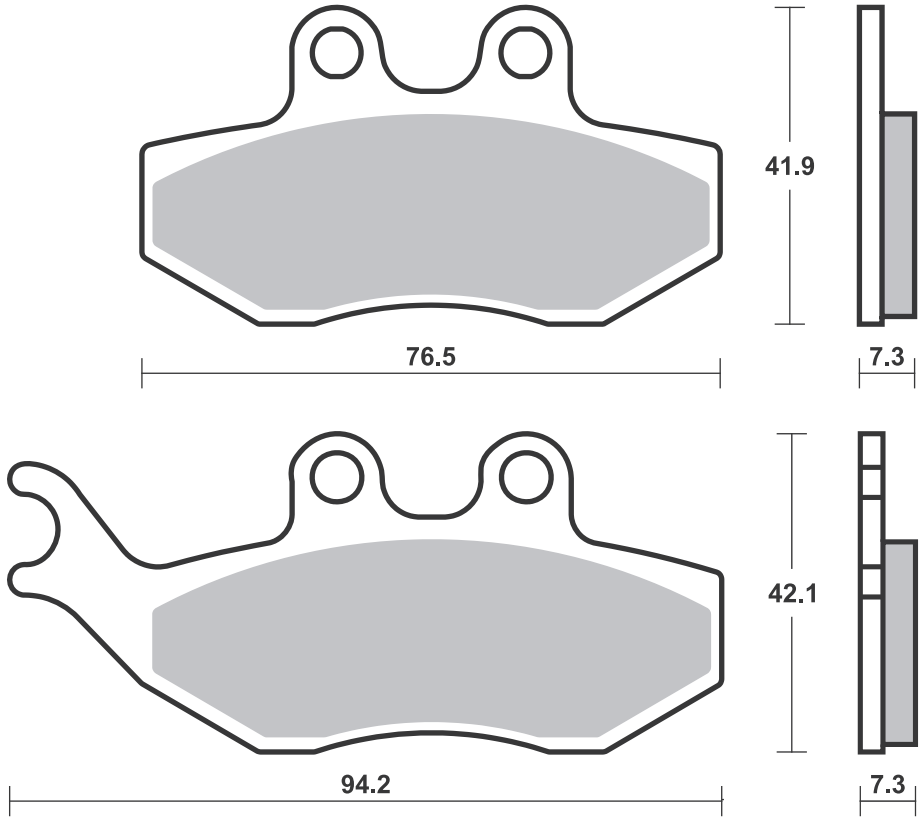

Available compounds **HF • SI • RSI** **SBS 775**

1 set = 4 pcs.

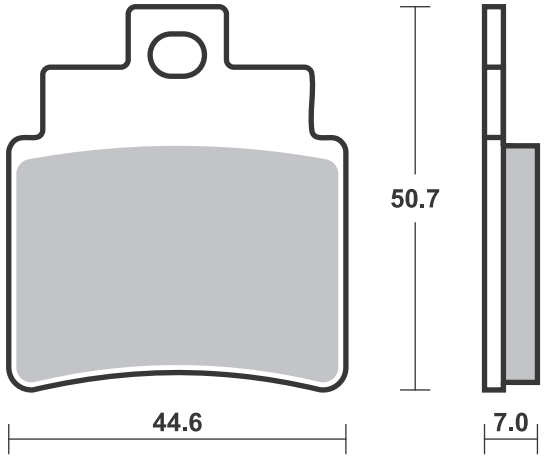

SBS 777 Recommended compound

BRAKING					
Rear cross (1 piston)					
HONDA					
CR	125	R	02-07		**RSI**
CRE	125		02-07		**SI**
CRE	125	RR	11-11		**SI**
CRF	150	R	07-21		**RSI**
CR	250	R	02-07		**RSI**
CRE	250		02-07		**SI**
CRF	250	R	04-09		**RSI**
CRF	250	R Efi	10-21		**RSI**
CRF	250	X	04-19		**SI**
CRE	450	F	02-06		**SI**
CRF	450	Efi	09-12		**RSI**
CRF	450	L	19-21		**RSI**
CRF	450	R	02-08		**RSI**
CRF	450	R Efi	13-21		**RSI**
CRF	450	RX Efi	17-21		**SI**
CRF	450	X	05-21		**SI**
TM					
MX	85		13-20	**RSI**	**RSI**
SM	85		18-19	**RSI**	**RSI**

SBS 778 Recommended compound

BMW					
R	850	R	03-07	**HS**	
R	1100	S With			
		Integral ABS	01-05	**HS**	
R	1150	GS			
		(Brembo cal.)	02-05	**HS**	
R	1150	R	01-06	**HS**	
R	1150	R Rockster	03-05	**HS**	
R	1150	RS	01-04	**HS**	
K	1200	LT With			
		Integral ABS	01-08	**HS**	
K	1200	R	05-08	**HS**	
K	1200	R Sport	05-07	**HS**	
R	1200	C Classic	03-04	**HS**	
R	1200	C Independent	03-04	**HS**	
R	1200	C Montauk	02-04	**HS**	
R	1200	CL	03-04	**HS**	
R	1200	R	07-14	**HS**	
K	1300	R	09-15	**SP**	
K	1300	R Dynamic	11-15	**SP**	
K	1600	B	17-21	**HS**	
K	1600	Grand America	18-20	**HS**	
K	1600	GT	11-21	**HS**	
K	1600	GTL	11-21	**HS**	

Available compounds **HF • CS • SI • RSI** **SBS 777**

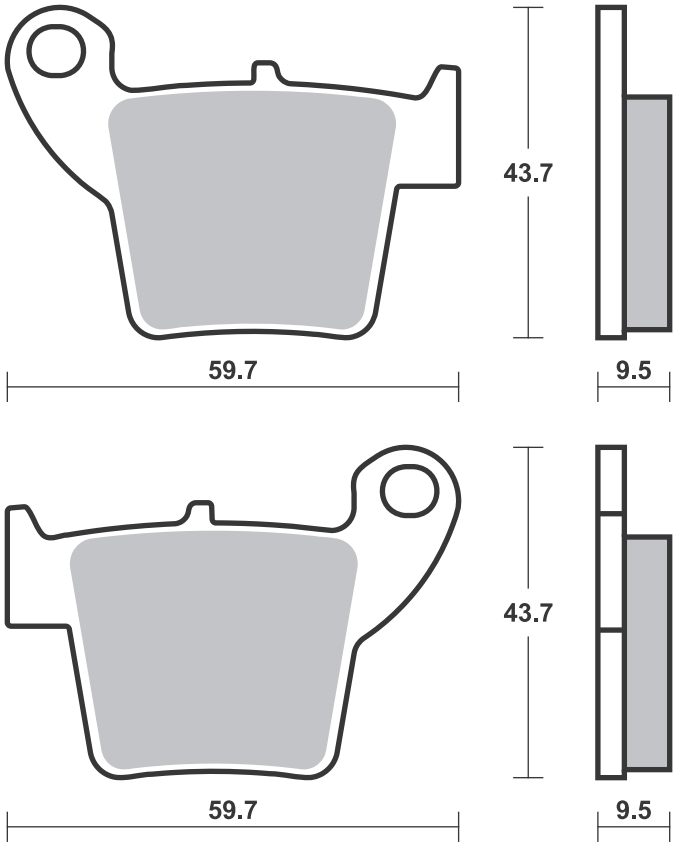

Available compounds **HF • HS • SP • RST** **SBS 778**

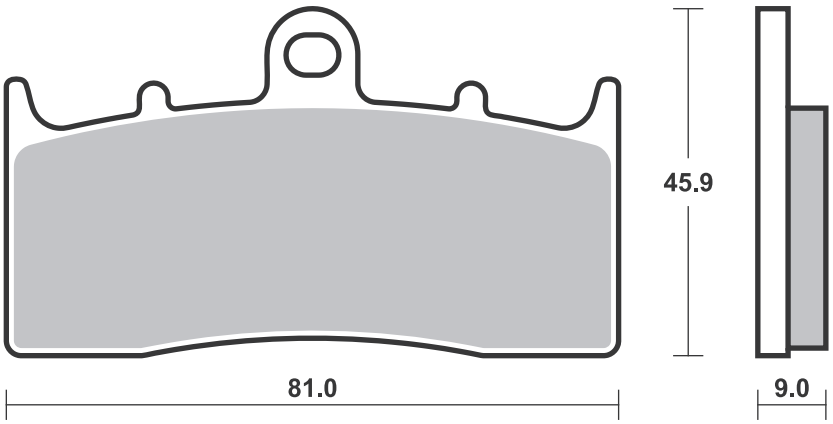

SBS 779 Recommended compound

BERINGER	
6 Piston Endurance Caliper	

SBS 780 Recommended compound

KEEWAY	
TX 125 SM 10-16 **HF**	

Available compounds **DC** **SBS 779**

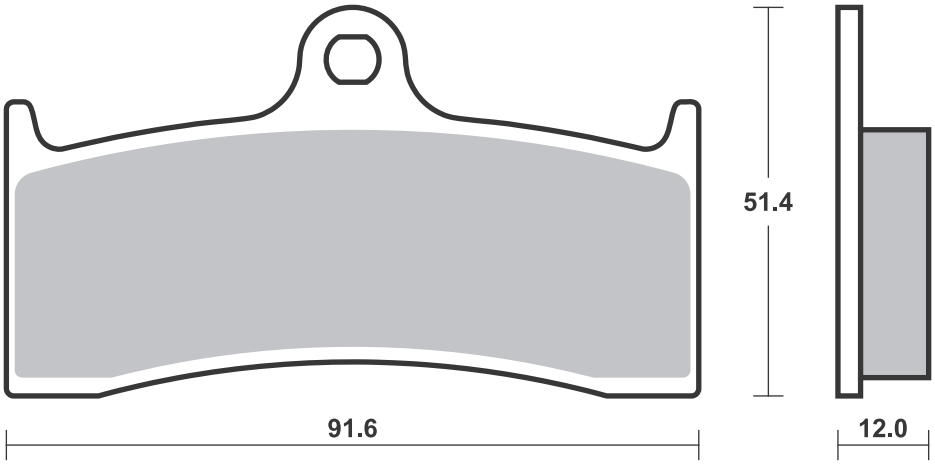

Available compounds **HF** **SBS 780**

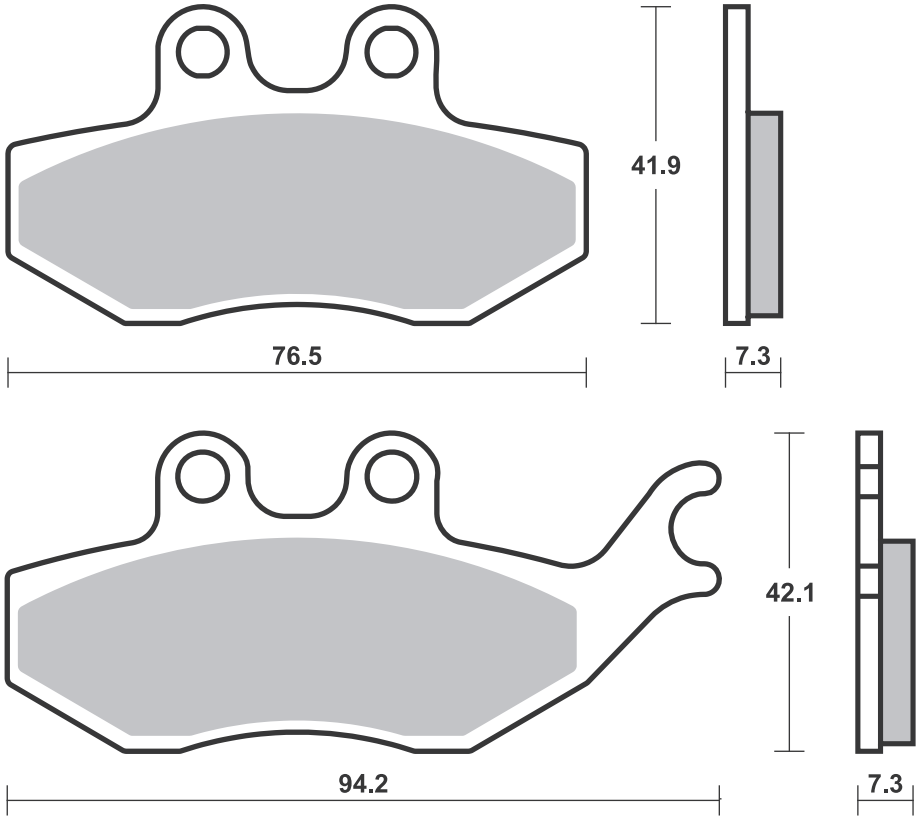

Dimensions in mm / Dimensions en mm • 1” = 25.4 mm , 1 mm = 0.04”

SBS 782 Recommended compound

INDIAN					
	1800	Chief	15-18	**H.HS**	
	1800	Chief Classic	14-18	**H.HS**	
	1800	Chief Dark Horse	15-19	**H.HS**	
	1800	Chieftain	14-18	**H.HS**	
	1800	Chieftain Classic	15-18	**H.HS**	
	1800	Chieftain Dark Horse	15-18	**H.HS**	
	1800	Chieftain Limited	15-18	**H.HS**	
	1800	Dark Horse	16-18	**H.HS**	
	1800	Roadmaster	15-19	**H.HS**	
	1800	Roadmaster Classic	15-18	**H.HS**	
	1800	Roadmaster Elite	15-18	**H.HS**	
	1800	Springfield	16-19	**H.HS**	
	1800	Springfield Dark Horse	15-20	**H.HS**	
KAWASAKI					
Z	800		13-16	**HS**	
Z	800	ABS	13-16	**HS**	
Z	800	e ABS	13-16	**HS**	
Z	900		17-21	**HS**	
ZX-9R	900	Ninja	02-03	**HS**	
MORIWAKI					
MD	250		09-09	**DC**	
SUZUKI					
GSX-S	750		17-19	**HS**	
	1340	B-King	08-14	**HS**	
TRIUMPH					
	675	Daytona	06-08	**HS**	
	675	Street Triple R	09-17	**HS**	
	675	Street Triple RX	15-16	**HS**	
	1050	Speed Triple	05-07	**HS**	
	1050	Tiger	07-13	**HS**	
	1050	Tiger SE	09-13	**HS**	
	1050	Tiger Sport	15-19	**HS**	
VICTORY					
	1634	Hammer	08-08	**H.HS**	
	1634	Kingpin all models	08-12	**H.HS**	
	1634	Vegas	08-17	**H.HS**	
	1634	Vegas 8-Ball	08-17	**H.HS**	
	1634	Vegas Jackpot	08-08	**H.HS**	
	1731	Boardwalk	13-15	**H.HS**	
	1731	Cross Country	10-17	**H.HS**	
	1731	Cross Country 8-Ball	14-16	**H.HS**	
	1731	Cross Country Tour	12-17	**H.HS**	
	1731	Cross Roads	10-12	**H.HS**	
VICTORY					
	1731	Cross Roads 8-Ball	14-14	**H.HS**	
	1731	Cross Roads Classic	14-14	**H.HS**	
	1731	Gunner	15-17	**H.HS**	
	1731	Hammer	09-11	**H.HS**	
	1731	Hammer 8-Ball	10-16	**H.HS**	
	1731	Hammer S	09-17	**H.HS**	
	1731	Hard-Ball	12-13	**H.HS**	
	1731	High-Ball	12-17	**H.HS**	
	1731	Jackpot	10-16	**H.HS**	
	1731	Judge	13-17	**H.HS**	
	1731	Kingpin	10-12	**H.HS**	
	1731	Kingpin 8-Ball	10-11	**H.HS**	
	1731	Magnum	15-17	**H.HS**	
	1731	Magnum X-1	15-17	**H.HS**	
	1731	Vegas	10-17	**H.HS**	
	1731	Vegas 8-Ball	10-17	**H.HS**	
	1731	Vegas Jackpot	09-09	**H.HS**	

SBS 783 Recommended compound

GAS GAS					
MC	65		21-21	**RSI**	**RSI**
HUSQVARNA					
CR	65		12-13	**RSI**	
TC	65		17-21	**RSI**	**RSI**
KTM					
SX	65		02-08	**RSI**	
SX	65		09-21	**RSI**	**RSI**
SX	85		04-11	**RSI**	**RSI**
SX	85		11-11	**RSI**	

Available compounds **HF • HS • SP • DC • RST • H.HF • H.HS** **SBS 782**

HF / HS / SP - Th. 7.0
RST / DC - Th. 8.3

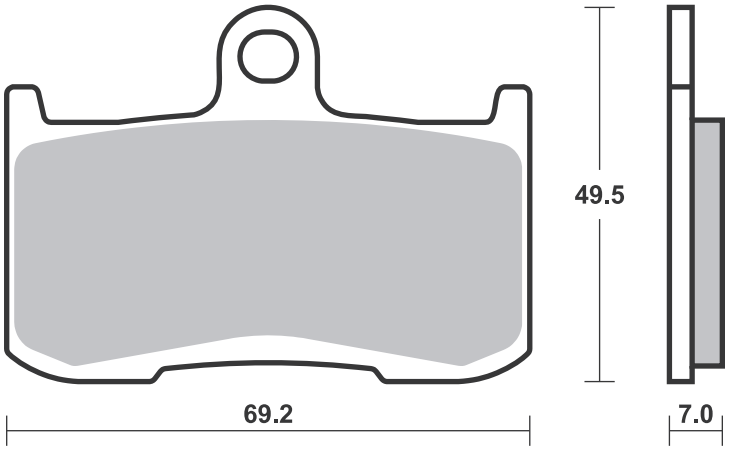

Available compounds **CS • SI • RSI** **SBS 783**

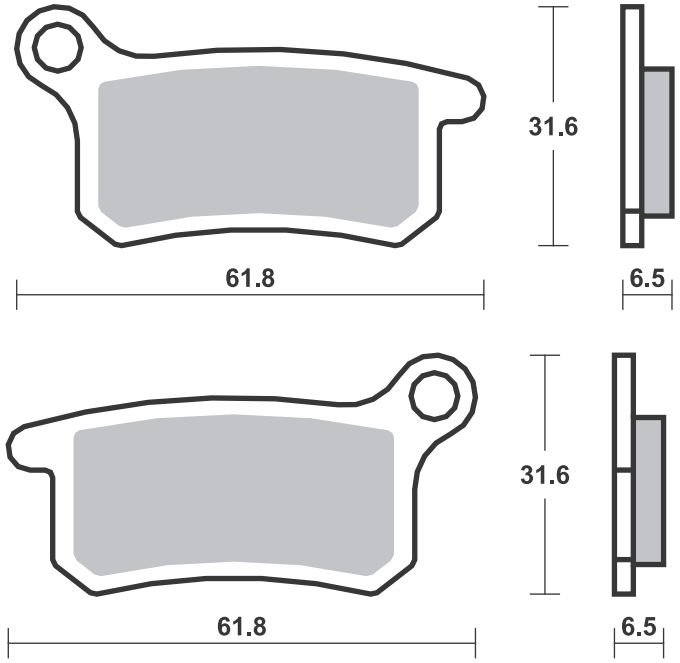

SBS 784 Recommended compound

CF MOTO			
	125 Papio	17 - 17	**HF**
HONDA			
	125 Monkey	19 - 21	**HF**
CBR	125 R	03 - 10	**HF**
CBR	150 R	00 - 10	**HF**

SBS 785 Recommended compound

A.P. RACING CALIPERS
CP-4488 Two Pad Radial
4 Piston Monoblock

Available compounds **HF** **SBS 784**

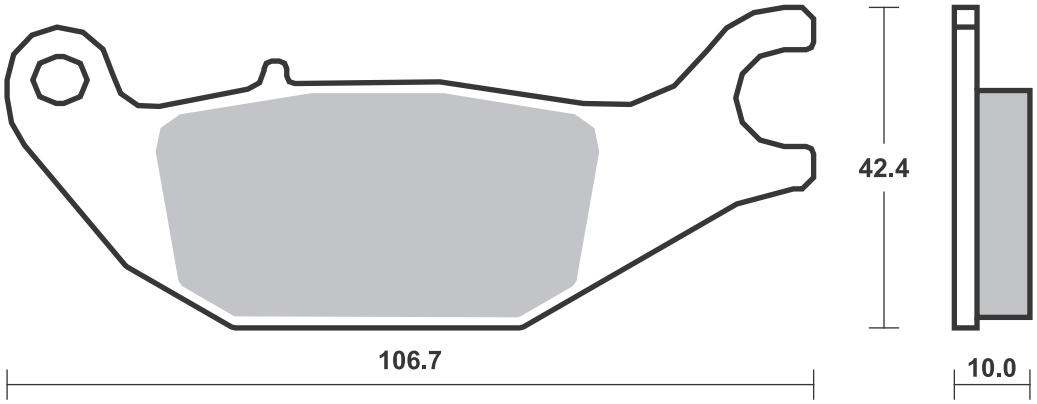

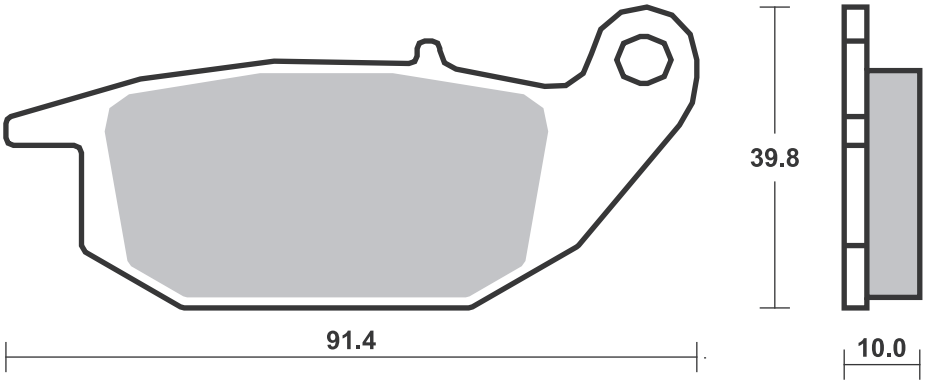

Available compounds **HS • DC** **SBS 785**

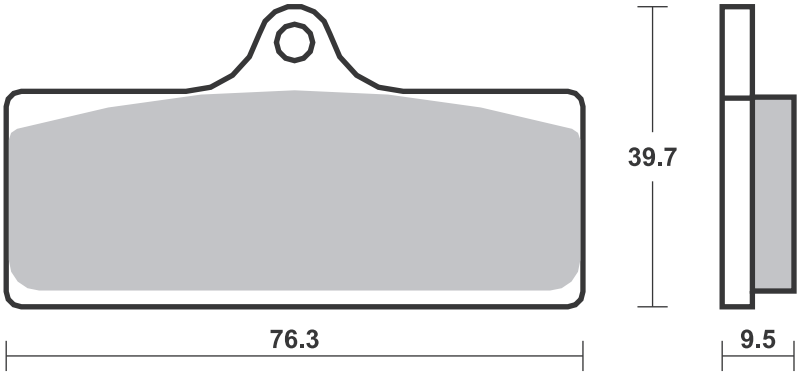

SBS 787 Recommended compound

POLARIS				
	325	Xpedition	02 - 02	**ATS**
	330	ATP	06 - 05	**ATS**
	330	E Trail Blazer	08 - 12	**ATS**
	330	Magnum 2x4, 4x4	03 - 13	**ATS**
	450	Sportsman	06 - 09	**ATS**
	500	E Scrambler 2x4, 4x4	08 - 11	**ATS**
	500	Magnum 2x4, 4x4	02 - 07	**ATS**
	500	Predator e	06 - 13	**ATS**
	500	Sportsman HO (to 15.12.2008)	03 - 08	**ATS**
	600	Sportsman	03 - 06	**ATS**
	700	Sportsman	02 - 09	**ATS**

POLARIS				
	700	Sportsman MV 700	05 - 06	**ATS**
	800	Sportsman (to 15.12.2008)	05 - 08	**ATS**

SBS 788 Recommended compound

DERBI				
	659	Mulhacen	05 - 05	**HS**
KAWASAKI				
ZX-6RR	600	Ninja	03 - 06	**HS**
ZX-6R	636	Ninja	03 - 06	**HS**
ZX-10R	1000	Ninja	04 - 07	**HS**
ZX-12R	1200	Ninja	04 - 06	**HS**
VN	1600	Mean Streak	05 - 05	**HS**
SUZUKI				
GSX-R	1000		03 - 03	**HS**
M95	1600	Boulevard	05 - 07	**HS**

SBS 789 Recommended compound

SUZUKI				
C90	1500	Boulevard	05 - 18	**LS**
VL	1500	Intruder LC	02 - 02	**LS**

Available compounds **SI • RSI • ATS** **SBS 787**

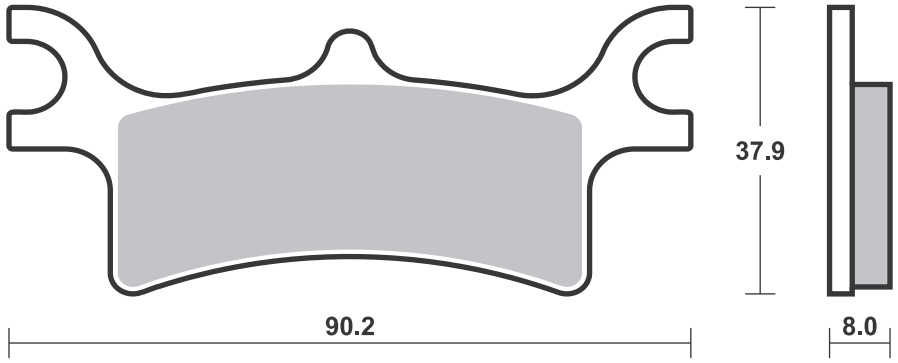

Available compounds **HS • SP • DC • RST • DS-1** **SBS 788**

1 set = 4 pcs.

HS / SP - Th. 7.9
RST / DC / DS - Th. 9.5

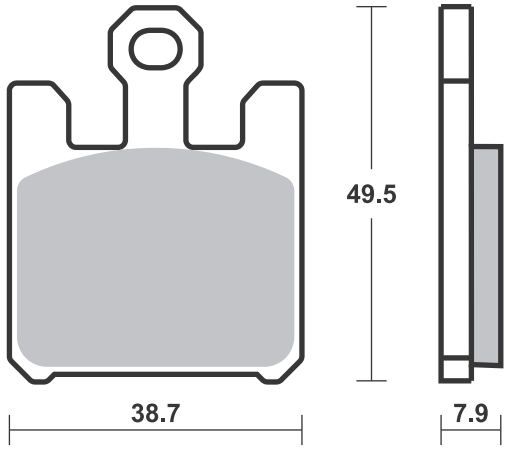

Available compounds **HF • LS** **SBS 789**

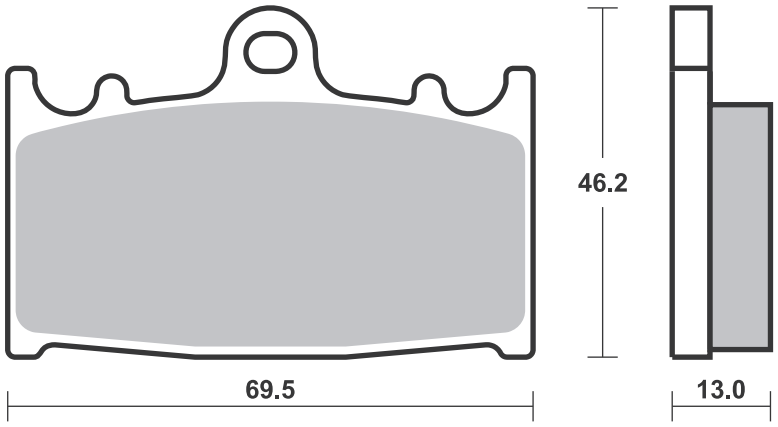

SBS 790 Recommended compound

APRILIA				
MXV	450		09-13	**RSI**
RXV	450		06-13	**SI**
SXV	450		06-13	**RSI**
SXV	450	Van den Bosch Rep.	08-10	**RSI**
RXV	550		06-13	**SI**
SXV	550		06-13	**RSI**
SXV	550	Van den Bosch Rep.	08-10	**RSI**
BETA				
RR	125		18-19	**SI**
RR	250		05-09	**SI**
	300	Crosstrainer	15-15	**SI**
RR	300		13-19	**SI**
RR	350	Efi	15-15	**SI**
RR	350	Efi Racing	15-15	**SI**
RR	350	Enduro	12-14	**SI**
RR	390		15-19	**SI**
RR	400	Enduro	05-05	**SI**
RR	430		15-19	**SI**
RR	430	Racing	15-19	**SI**
RR	450	Cross Country	12-12	**SI**
RR	450	Enduro	05-07	**SI**
RR	480		15-19	**SI**
RR	480	Racing	15-19	**SI**
RR	498	Enduro	12-14	**SI**
RR	525	Enduro	05-13	**SI**
BIMOTA				
BBX	300	Enduro	12-12	**SI**
CCM				
	450	MX	08-10	**RSI**
FANTIC				
XX	125		20-21	**RSI**
GAS GAS				
EC	200		17-17	**SI**
XC	200		18-19	**SI**
EC	250		12-20	**SI**
EC	250	Enduro GP 18	18-19	**SI**
XC	250		17-19	**SI**
EC	300		12-20	**SI**
EC	300	Enduro GP 18	18-19	**SI**
XC	300		18-19	**SI**
KAWASAKI				
KX-F	250		04-10	**RSI**
KX-F	250	DFI	11-21	**RSI**
KLX	450	R	07-19	**SI**
KX-F	450		06-08	**RSI**
KX-F	450	DFI	09-21	**RSI**
SHERCO				
SE	250	2.5i Enduro	06-11	**SI**
SX	250	2.5i-F	09-11	**RSI**
SE	300	3.0i-F	10-11	**SI**
SE	450	4.5i Enduro	05-11	**SI**
SM	450	4.5i Supermotard	06-06	**RSI**
SE	510	5.1i Enduro	06-11	**SI**
SUZUKI				
RM-Z	250		04-21	**RSI**
RMX	450	Z Efi	10-18	**SI**

SUZUKI				
RM-Z	450		05-21	**RSI**
TM				
EN	125	Enduro	05-17	**SI**
MX	125		05-20	**RSI**
EN	250	Enduro	05-15	**SI**
EN	250	F Enduro	05-17	**SI**
MX	250		05-20	**RSI**
MX	250	F	05-20	**RSI**
EN	300	Enduro	05-05	**SI**
FT	300		17-19	**RSI**
MX	300		05-20	**RSI**
EN	450	F Enduro	05-17	**SI**
FT	450	Fi	17-19	**RSI**
MX	450	F	05-20	**RSI**
EN	530	F Enduro	05-05	**SI**
FT	530	Fi	17-19	**RSI**
MX	530	F	05-20	**RSI**
YAMAHA				
YZ	125		03-21	**RSI**
WR	250	F	03-13	**SI**
WR	250	F Efi	15-21	**SI**
WR	250	F Enduro GP	18-18	**SI**
WR	250	R	08-15	**LS**
WR	250	X	08-16	**LS**
YZ	250		03-21	**RSI**
YZ	250	F	03-13	**RSI**
YZ	250	F Efi	14-21	**RSI**
YZ	250	FX Efi	15-15	**SI**
YZ	250	X	16-17	**SI**
WR	450	F	03-15	**SI**
WR	450	F Efi	16-21	**SI**
WR	450	F Enduro GP	18-18	**SI**
YZ	450	F	03-21	**RSI**
YZ	450	FX	16-21	**SI**
ZERO				
DS	ZF11.4		13-13	**LS**
DS	ZF8.5		13-13	**LS**
FX	ZF2.8		13-13	**LS**
FX	ZF5.7		13-13	**LS**
MX	ZF2.8		13-13	**RSI**
MX	ZF5.7		13-13	**RSI**
S	ZF11.4		13-13	**LS**
S	ZF8.5		13-13	**LS**
XU	ZF2.8		13-13	**LS**
XU	ZF5.7		13-13	**LS**

Available compounds **HF • LS • CS • SI • RSI** **SBS 790**

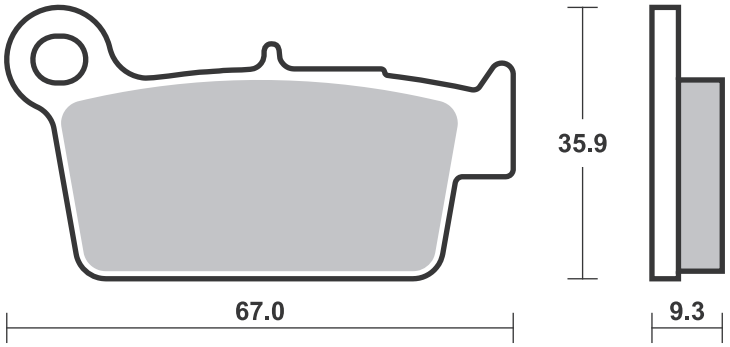

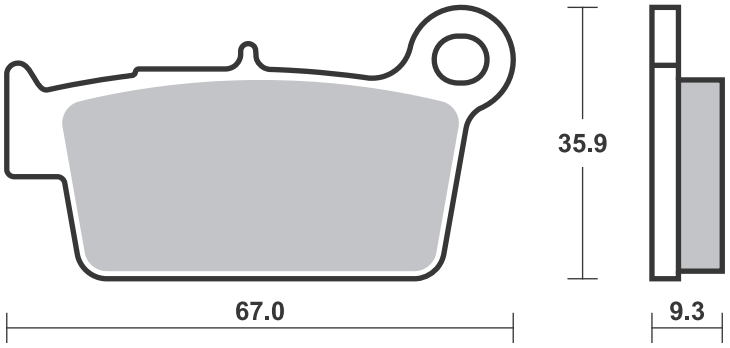

SBS 791 Recommended compound

BMW			
G	450 SMR	09-10	**RSI**
G	450 X	08-10	**SI**
BREMBO RACING CALIPERS			
Off Road XQ21390, PF 26			
GAS GAS			
MC	85	21-21	**RSI**
MC	125	21-21	**RSI**
EC	200 Ranger Enduro	19-19	**SI**
EC	250	21-21	**SI**
EC	250 F	21-21	**SI**
MC	250 F	21-21	**RSI**
EC	300	21-21	**SI**
EC	300 Ranger Enduro	19-19	**SI**
EC	350 F	21-21	**SI**
MC	450 F	21-21	**RSI**
HUSABERG			
TE	125	13-13	**SI**
FE	250	13-13	**SI**
TE	250	11-13	**SI**
TE	300	11-13	**SI**
FE	350	13-13	**SI**
FE	390	10-13	**SI**
FE	450	09-13	**SI**
FE	501	13-13	**SI**
FE	570	09-13	**SI**
HUSQVARNA			
TC	85	21-21	**RSI**
CR	125	05-13	**RSI**
TC	125	14-21	**RSI**
TE	125	14-16	**SI**
TX	125	17-19	**SI**
TE	150 I	20-20	**SI**
CR	250	05-05	**RSI**
FC	250	14-21	**RSI**
FE	250	14-21	**SI**
TC	250	04-21	**RSI**
TE	250	14-18	**SI**
TE	250 4T	10-13	**SI**
TE	250 I	20-20	**SI**
TC	300	14-15	**RSI**
TE	300	14-19	**SI**
WR	300	09-13	**SI**
TE	310 4T	10-13	**SI**
FC	350	14-21	**RSI**
FE	350	14-21	**SI**
SMR	449	11-13	**RSI**
TC	449	11-13	**RSI**
TE	449	11-13	**SI**
FC	450	14-21	**RSI**
FE	450	14-21	**SI**
FS	450	15-20	**RSI**
SM	450 R	06-13	**RSI**
SM	450 RR	06-10	**RSI**
TC	450	04-10	**RSI**
TE	450	14-14	**SI**
FE	501	14-21	**SI**
SM	510 Centennial	06-06	**RSI**
SM	510 R	06-10	**RSI**
TC	510	04-10	**RSI**
SMR	511	11-13	**RSI**
TE	511	11-14	**SI**
SM	610 ie	07-10	**RSI**
SM	630	10-10	**HF**

HUSQVARNA			
TE	630	10-13	**HF**
TE	630	14-14	**SI**
STR	650 CRC	07-07	**HF**
KTM			
SX	85	21-21	**RSI**
SX	85 (19"/ 16" wheels)	21-21	**RSI**
EXC	125 Enduro	04-15	**SI**
SX	125	04-21	**RSI**
SX	144	07-08	**RSI**
EXC	150 TPI	20-21	**SI**
SX	150	09-21	**RSI**
XC	150	10-14	**RSI**
EXC	200 Enduro	04-16	**SI**
SX	200	03-04	**RSI**
XC	200	06-09	**RSI**
XC-W	200	06-16	**RSI**
EXC	250 Enduro	04-08	**SI**
EXC	250 Enduro 4T	04-06	**SI**
EXC	250 TPI	18-21	**SI**
EXC-F	250 Enduro	07-19	**SI**
SX	250	03-21	**RSI**
SX-F	250	06-21	**RSI**
XC	250	06-14	**RSI**
XC-W	250	08-17	**RSI**
EXC	300 Enduro	04-08	**SI**
EXC	300 TPI	18-21	**SI**
XC	300	06-14	**RSI**
XC-W	300	06-08	**RSI**
EXC-F	350	11-21	**SI**
SX-F	350	11-21	**RSI**
XC-F	350	12-17	**RSI**
XCF-W	350	13-17	**RSI**
EXC	400 Racing	04-07	**SI**
XC-W	400	07-10	**RSI**
	450 Rally	19-19	**SI**
EXC-F	450 Racing	04-19	**SI**
SX	450 SM Factory Replica	04-07	**RSI**
SX	450 SMR	04-12	**RSI**
SX-F	450	03-21	**RSI**
XC-F	450	06-17	**RSI**
XCF-W	450	07-15	**RSI**
EXC-F	500	12-21	**SI**
XCF-W	500	12-17	**RSI**
SX	505 Racing	07-09	**RSI**
XC-F	505	08-09	**RSI**
EXC	525 Racing	04-06	**SI**
SX	525 SMR	04-07	**RSI**
SX-F	525 Racing	04-06	**RSI**
XC-F	525	07-07	**RSI**
XCF-W	525	07-07	**RSI**
EXC	530 Racing	08-11	**SI**
XCF-W	530	09-11	**RSI**
SX	560 SMR	06-07	**RSI**
SHERCO			
SE-R	125	17-19	**SI**
SE	250 , R	14-14	**SI**
SE	250 F, F-R	14-19	**SI**
SE	250 i/iR	12-13	**SI**
SE	250 i-F	13-13	**SI**
SCF-R	300	16-19	**SI**
SE	300 , R	14-19	**SI**
SE	300 F, F-R	14-19	**SI**
SE	300 i/iR	12-13	**SI**

SHERCO			
SE	300 i-F	13-13	**SI**
SE	450 F, F-R	14-19	**SI**
SE	450 iR	12-13	**SI**
SE	510 iR	12-13	**SI**
SWM			
	125 Gran Milano Outlaw	20-20	**HF**
	125 Varez	20-20	**HF**
RS	125 R	20-20	**HF**
SM	125 R	20-20	**HF**
RS	300 R	15-20	**SI**
	400 Varez	20-20	**HF**
SM	450 R	15-17	**HF**
	500 Ace of Spades	20-20	**HF**
	500 Gran Milano Outlaw	20-20	**HF**
RS	500 R	15-20	**SI**
SM	500 R	18-20	**HF**

Available compounds **HF • CS • SI • RSI** **SBS 791**

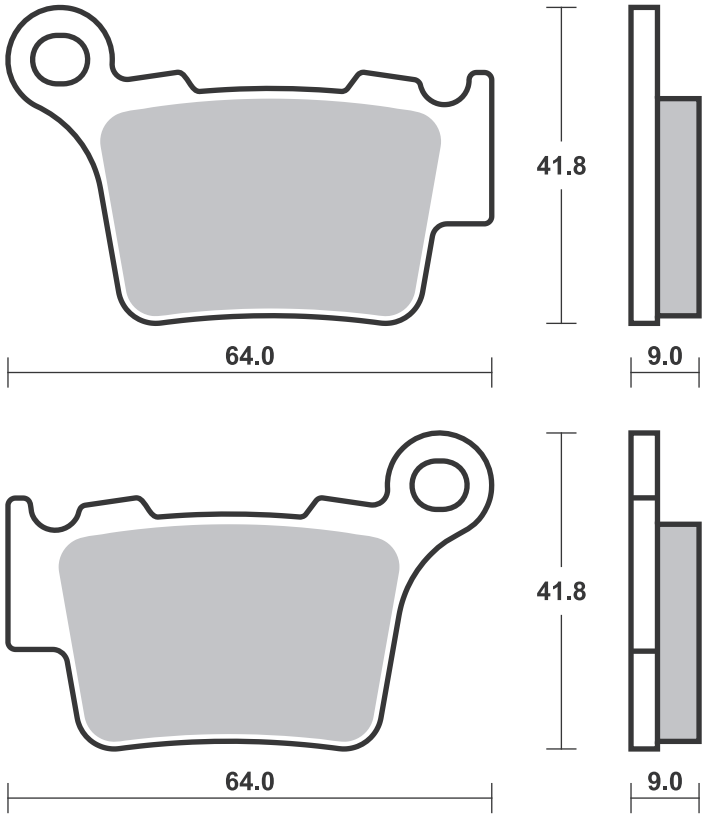

Dimensions in mm / Dimensions en mm • 1” = 25.4 mm , 1 mm = 0.04”

SBS 792 Recommended compound

SYM					
VS	125		07-13	**HF**	
VS	150		07-15	**HF**	

SBS 794 Recommended compound

COBRA					
CX	50	Big Wheel	10-14	**RSI**	**RSI**
CX	50	Junior	07-10	**RSI**	
CX	50	Junior	11-13	**RSI**	**RSI**
CX	50	Senior	07-13	**RSI**	**RSI**
GAS GAS					
MC		E 5	21-21	**RSI**	**RSI**
MC	50		21-21	**RSI**	**RSI**
HUSQVARNA					
EE		5	19-21	**RSI**	**RSI**
CR	50	Pro Senior	06-06		**RSI**
CR	50	Senior	06-06		**RSI**
TC	50		17-21	**RSI**	**RSI**
KTM					
SX-E		5	19-21	**RSI**	**RSI**

KTM					
SM	50	Supermoto	06-06	**RSI**	**RSI**
SX	50		09-21	**RSI**	**RSI**
SX	50	Mini	09-21	**RSI**	**RSI**
SX	50	Pro Junior LC	02-05	**RSI**	
SX	50	Pro Senior LC	02-03	**RSI**	
SX	50	Pro Senior LC	04-09	**RSI**	**RSI**
SX	50	Senior Adventure	04-07	**RSI**	
SX	65		04-08		**RSI**
LEM					
	50	CX2, CX3, RX2, RX3	03-06	**RSI**	**RSI**

LEM					
	50	R2, R3, R3 XC	03-06	**RSI**	**RSI**
RX	65		05-10	**RSI**	**RSI**
RX	150		11-11		**RSI**
POLINI					
X1	50	R	04-06	**RSI**	**RSI**
X3	50	R	04-06	**RSI**	**RSI**
X5	65	RP	05-06	**RSI**	**RSI**

SBS 795 Recommended compound

BUELL					
XB9R	984	Firebolt	02-10	**HS**	
XB9S	984	Lightning	03-10	**HS**	
XB9SX	984	CityX	05-10	**HS**	
XB12R	1200	Firebolt	04-08	**HS**	
XB12S	1200	Lightning	04-08	**HS**	
XB12Scg	1200	Lightning	06-08	**HS**	
XB12Ss	1200	Lightning Long	06-08	**HS**	
XB12STT	1200	Super TT	07-10	**HS**	
XB12X	1200	Ulysses	06-10	**HS**	

Available compounds **HF** **SBS 792**

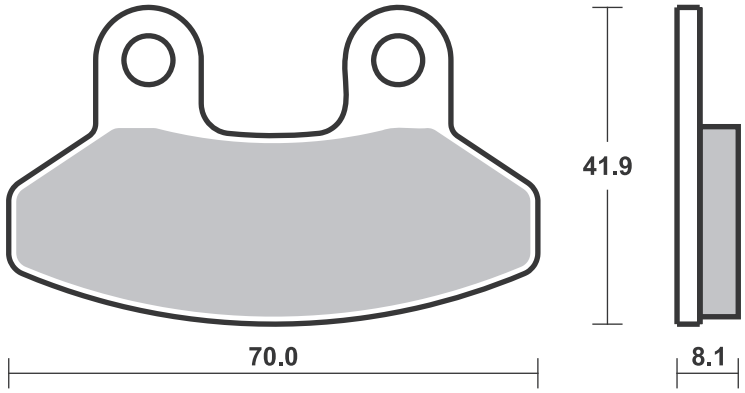

Available compounds **SI • RSI** **SBS 794**

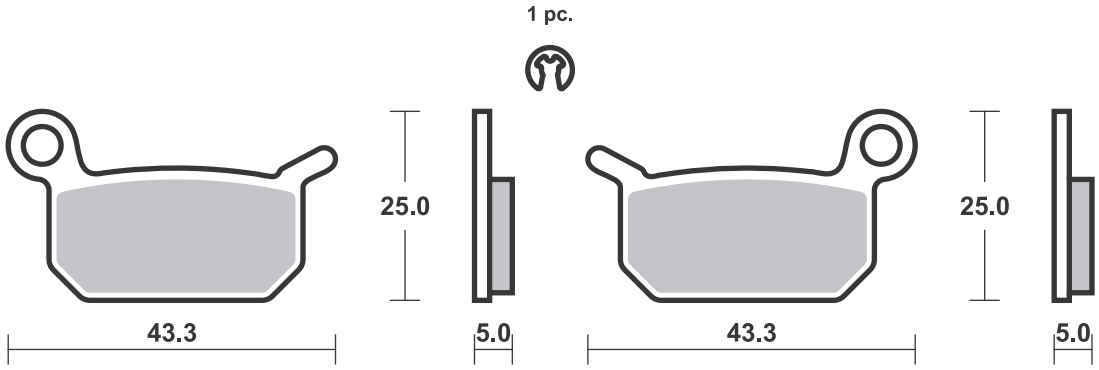

Available compounds **HF • HS** **SBS 795**

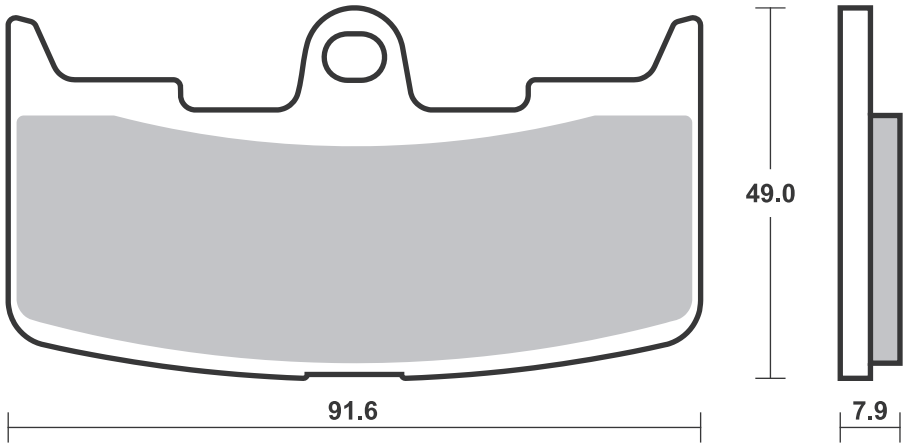

SBS 796 Recommended compound

BMW					
R	850	RT With Integral ABS	01-06	**HS**	
R	900	RT	05-13	**HS**	
R	1100	S Without Integral ABS	01-05	**HS**	
R	1150	GS Adventurer (Tokico cal.)	02-05	**HS**	
R	1150	RT With Integral ABS	01-06	**HS**	
	1200	HP2 Megamoto	06-08	**HS**	
K	1200	GT (K41) With Integral ABS	02-05	**HS**	
K	1200	GT (K44) With Integral ABS	04-08	**HS**	
K	1200	RS	01-05	**HS**	
K	1200	S	05-08	**HS**	
R	1200	GS	04-12	**SP**	
R	1200	GS Adventure	08-13	**HS**	
R	1200	GS Tripple Black	11-16	**SP**	
R	1200	RT	06-13	**HS**	
R	1200	S	06-07	**HS**	
R	1200	ST	06-07	**HS**	
K	1300	GT	09-10	**HS**	
K	1300	S	09-15	**HS**	

SBS 797 Recommended compound

HONDA					
	125	Grom	14-21	**HF**	
	125	Monkey	19-21	**HF**	
CBR	125	R	03-18	**HF**	
MSX	125		14-21	**HF**	
CBR	150	R	00-10	**HF**	

Available compounds **HF • HS • SP • RST** **SBS 796**

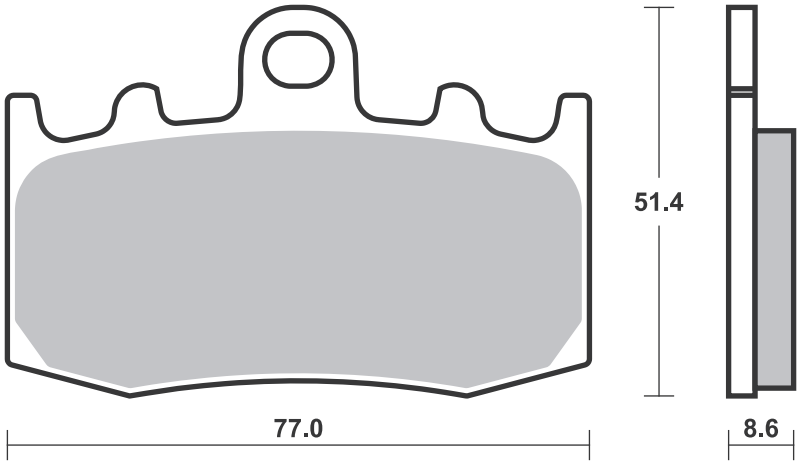

Available compounds **HF • RSI • RST** **SBS 797**

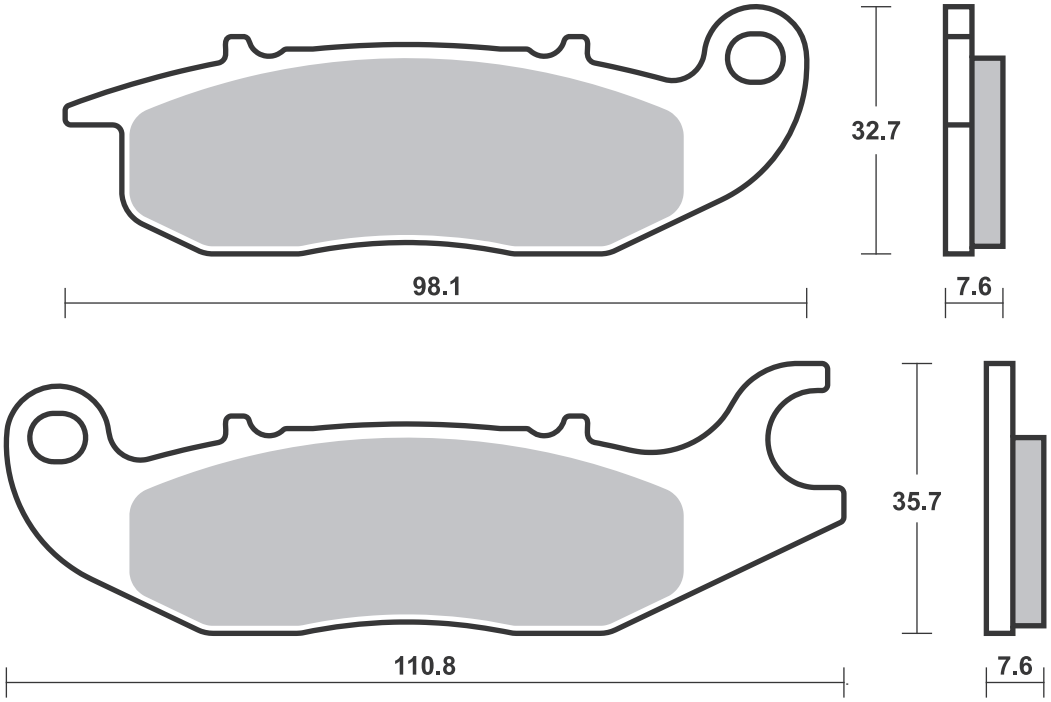

SBS 798 Recommended compound

KAWASAKI					
KFX	450		07-15	**SI**	
KVF	650	Brute Force			
		4x4	05-11	**SI**	
KVF	650	Prairie	01-03	**SI**	
KFX	700	V-Force	04-13	**SI**	
KSV	700	V-Force	04-11	**SI**	
KVF	700	Prairie	04-13	**SI**	
SUZUKI					
LT-V	700	Quadrunner			
		Twin Peaks	04-06	**SI**	

SBS 799 Recommended compound

CF MOTO					
	450	C-Force L	16-17		**SI**
	450	G-Force L	16-17		**SI**
CF	500	Terralander	13-15		**SI**
	550	C-Force	16-17		**SI**
CF	625	Terralander	11-15		**SI**
CF	800	Terralander	12-14		**SI**
GOES					
	520	Max	07-12		**SI**
G	520		07-12		**SI**
G	525		12-14		**SI**
G	620		11-14		**SI**
G	625	A	12-14		**SI**
YAMAHA					
YFM	660	FWAP 4x4			
		Grizzly	02-08		**SI**

Available compounds **SI • RSI** **SBS 798**

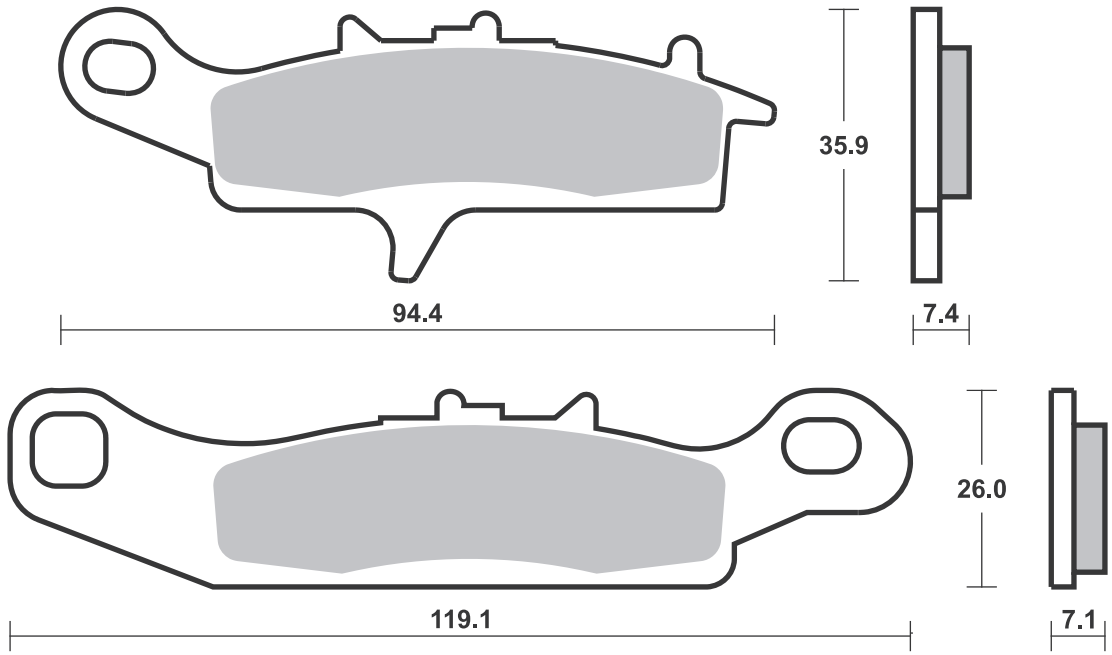

Available compounds **SI • RSI** **SBS 799**

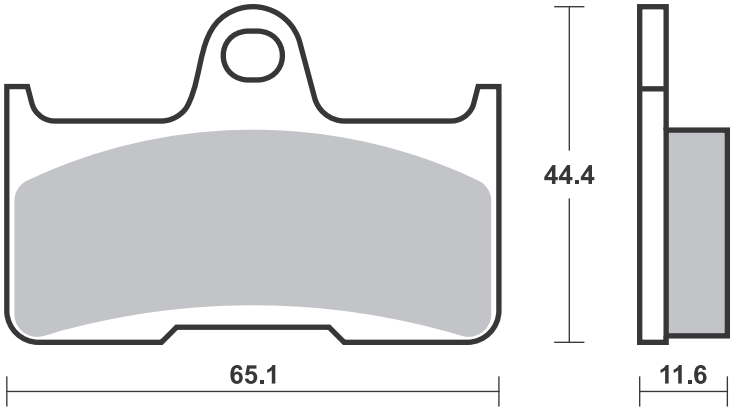

SBS 800 Recommended compound

POLARIS					
		EV-LSV	10 - 11		**ATS**
		LSV 4x4	11 - 12		**ATS**
		Ranger 48v			
		EV	13 - 18		**ATS**
	500	Ranger 2x4	08 - 07		**ATS**
	500	Ranger 2x4			
		EFi	08 - 13		**ATS**
	500	Ranger 2x4,			
		4x4, 6x6	02 - 13	**ATS**	**ATS**
	500	Ranger 4x4	12 - 13		**ATS**
	500	Ranger XP	06 - 09	**ATS**	**ATS**
	700	Ranger 4x4			
		EFi	08 - 08		**ATS**
	700	Ranger 6x6			
		EFi	12 - 13		**ATS**
	800	Ranger RZR4			
		EFi	12 - 14		**ATS**
	800	Ranger XP	12 - 13		**ATS**
	800	RZR-4	10 - 14		**ATS**

SBS 801 Recommended compound

KAWASAKI					
KFX	450		07 - 15	**SI**	
KVF	650	Brute Force			
		4x4	05 - 11	**SI**	
KVF	650	Prairie	01 - 03	**SI**	
KFX	700	V-Force	04 - 13	**SI**	
KSV	700	V-Force	04 - 11	**SI**	
KVF	700	Prairie	04 - 13	**SI**	
SUZUKI					
LT-V	700	Quadrunner			
		Twin Peaks	04 - 06	**SI**	

Available compounds **SI • RSI • ATS** **SBS 800**

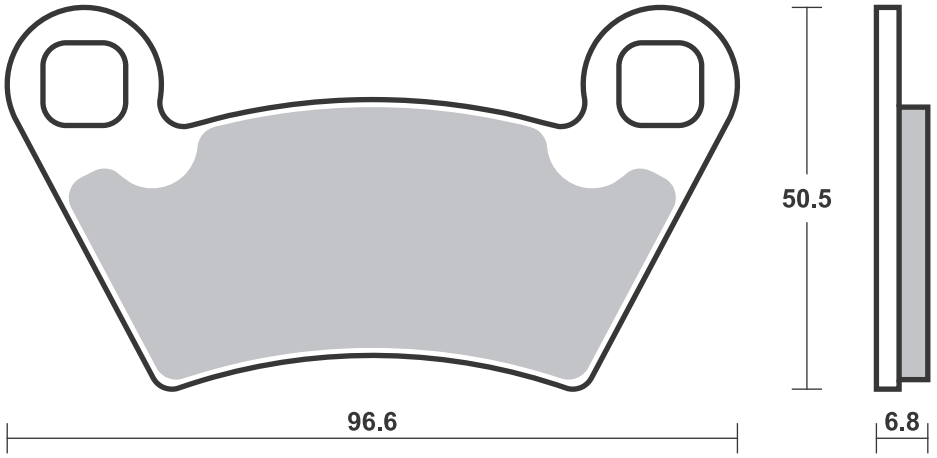

Available compounds **SI • RSI** **SBS 801**

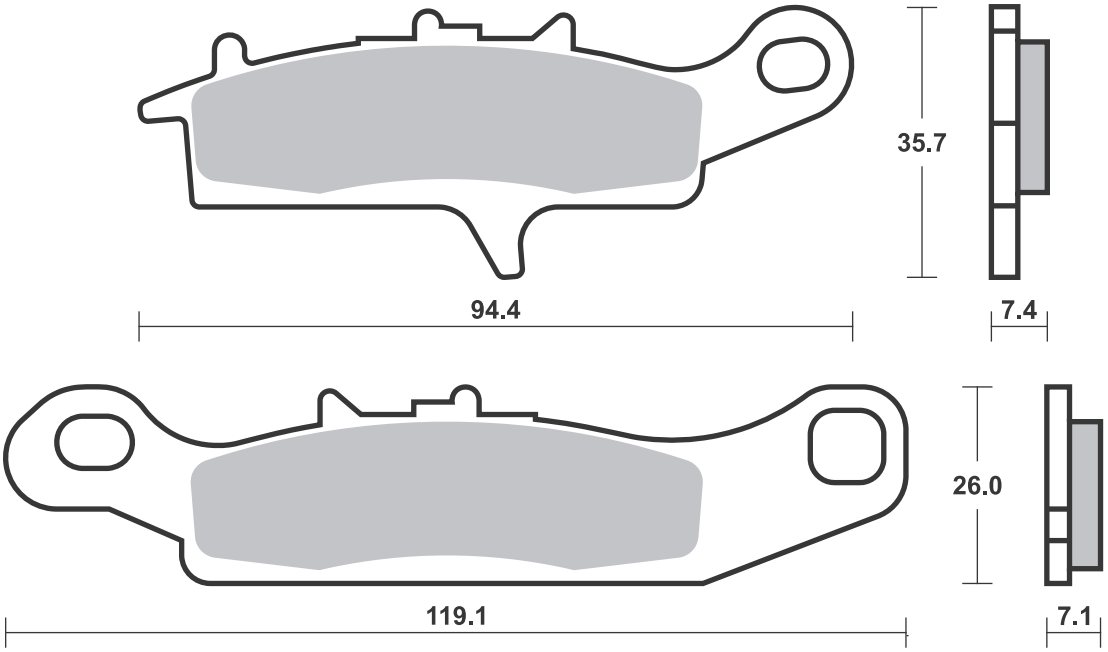

Dimensions in mm / Dimensions en mm • 1” = 25.4 mm , 1 mm = 0.04”

SBS 802 Recommended compound

BETA					
	80	EVO	09-10	**RSI**	
	80	Rev	08-10	**RSI**	
	125	EVO	09-14	**RSI**	
	125	Rev 3	00-08	**RSI**	**RSI**
	125	Rev 3	06-08	**RSI**	
	200	EVO	09-14	**RSI**	
	200	Rev 3	06-08	**RSI**	
	250	4-T Rev 3	07-11	**RSI**	
	250	EVO (2-T / 4-T)	09-14	**RSI**	
	250	Rev 3	00-09	**RSI**	**RSI**
	250	Rev 3	05-09	**RSI**	
	270	Rev 3	00-08	**RSI**	**RSI**
	270	Rev 3	05-08	**RSI**	
	290	EVO	09-13	**RSI**	
	300	EVO	09-15	**RSI**	
GAS GAS					
TX	125	Randone	12-13	**RSI**	
TXT	125		04-13	**RSI**	
TXT	200		04-10	**RSI**	
TXT	250		04-07	**RSI**	
TXT	280		04-04	**RSI**	
GAS GAS					
TXT	300		04-06	**RSI**	
TXT	300	Pro	07-11	**RSI**	
HONDA					
	250	Cota 4RT	04-16	**RSI**	
Cota	260	4RT	04-16	**RSI**	
MONTESA					
	250	Cota 4RT	04-16	**RSI**	
Cota	260	4RT	04-16	**RSI**	
	360	315R	01-04	**RSI**	
OSSA					
TR	125	i	15-15	**RSI**	
TR	250	i	15-15	**RSI**	
TR	280	i	10-15	**RSI**	
TR	280	i Explorer	12-15	**RSI**	
TR	300	i	15-15	**RSI**	
SCORPA					
SY	115	F Trial	06-06	**RSI**	
	125	Twenty Trial	16-18	**RSI**	
SCORPA					
SY	125	F Trial	06-11	**RSI**	
	250	Twenty Trial	16-18	**RSI**	
SY	250	F Trial	06-11	**RSI**	
SY	250	Trial	00-01	**RSI**	
	300	Twenty Trial	16-18	**RSI**	
SHERCO					
ST	125	1,25	06-11	**RSI**	
ST	250	2,5	01-01	**RSI**	
ST	290	2,9	01-01	**RSI**	
ST	300		16-19	**RSI**	
ST	320	3.2F	05-05	**RSI**	
TRS					
	250	ONE	16-19	**RSI**	
	280	ONE	16-19	**RSI**	
	300	ONE	16-19	**RSI**	

SBS 803 Recommended compound

APRILIA					
	50	Mini RX	04-04	**RSI**	
BETA					
	50	ProRace 12/10	04-04	**RSI**	**RSI**
GAS GAS					
TX	125	Randone	12-13		**RSI**
TXT	125		04-13		**RSI**
TXT	125	(Formula cal.)	12-13		**RSI**
TXT	125	GP	19-20		**RSI**
TXT	125	Pro Racing	14-14		**RSI**
TXT	125	Pro Replica	13-13		**RSI**
TXT	125	Racing	19-21		**RSI**
TXT	200		04-10		**RSI**
TXT	250		04-07		**RSI**
TXT	250	(Formula cal.)	12-13		**RSI**
TXT	250	GP	19-20		**RSI**
TXT	250	Pro Racing	14-19		**RSI**
TXT	250	Pro Replica	13-14		**RSI**
TXT	250	Racing	19-21		**RSI**
TXT	280		04-04		**RSI**
TXT	280	(Formula cal.)	12-12		**RSI**
TXT	280	GP	19-20		**RSI**
TXT	280	Pro Racing	14-19		**RSI**
TXT	280	Pro Replica	13-13		**RSI**
TXT	280	Racing	19-21		**RSI**
TXT	300		04-06		**RSI**
TXT	300	(Formula cal.)	12-12		**RSI**
TXT	300	GP	19-20		**RSI**
TXT	300	Pro	07-11		**RSI**
TXT	300	Pro Racing	14-19		**RSI**
TXT	300	Pro Replica	13-13		**RSI**
TXT	300	Racing	19-21		**RSI**
HONDA					
	250	Cota 4RT	04-16		**RSI**
Cota	260	4Ride	16-19		**RSI**
HONDA					
Cota	260	4RT	04-16		**RSI**
Cota	260	4RT Race Replica	15-19		**RSI**
Cota	300	RR	16-19		**RSI**
HUSQVARNA					
CR	50	Junior	06-06	**RSI**	
CR	50	Pro Senior	06-06	**RSI**	
CR	50	Senior	06-06	**RSI**	
JOTAGAS					
JT	125		14-19		**RSI**
JT	250		14-19		**RSI**
JT	280		14-19		**RSI**
JT	300		14-19		**RSI**
MONTESA					
	250	Cota 4RT	04-16		**RSI**
Cota	260	4Ride	16-19		**RSI**
Cota	260	4RT	04-16		**RSI**
Cota	260	4RT Race Replica	15-19		**RSI**
Cota	300	RR	16-19		**RSI**
	360	315R	01-04		**RSI**
OSSA					
TR	125	i	15-15		**RSI**
TR	250	i	15-15		**RSI**
TR	280	i	10-15		**RSI**
TR	280	i Explorer	12-15		**RSI**
TR	300	Factory R	15-15		**RSI**
TR	300	i	15-15		**RSI**
SCORPA					
SY	115	F Trial	06-06		**RSI**
TY-S	115	F Trial	06-06		**RSI**
	125	Twenty Trial	16-18		**RSI**
SCORPA					
SY	125	F Trial	06-11		**RSI**
TY-S	125	F Trial	06-08		**RSI**
	250	Twenty Trial	16-18		**RSI**
SY	250	F Trial	06-11		**RSI**
SY	250	Trial	00-01		**RSI**
	300	Twenty Trial	16-18		**RSI**
SHERCO					
ST	80	(Formula cal.)	13-14		**RSI**
ST	125	(Formula cal.)	13-14		**RSI**
ST	125	1,25	06-11		**RSI**
ST	250	(Formula cal.)	13-14		**RSI**
ST	250	2,5	01-01		**RSI**
ST	290	(Formula cal.)	13-14		**RSI**
ST	290	2,9	01-01		**RSI**
ST	300		16-19		**RSI**
ST	305	(Formula cal.)	13-14		**RSI**
ST	320	3.2F	05-05		**RSI**
TRS					
	125	ONE	19-20		**RSI**
	125	RR ONE	19-20		**RSI**
	250	ONE	16-19		**RSI**
	250	RR ONE	19-20		**RSI**
	280	ONE	16-19		**RSI**
	280	RR ONE	19-20		**RSI**
	300	ONE	16-19		**RSI**
	300	RR ONE	19-20		**RSI**
VERTIGO					
	300	Combat Camo Works	15-19		**RSI**
	300	Combat Ice Hell	15-19		**RSI**
	300	Combat RR	15-19		**RSI**

Available compounds **HF • RSI** **SBS 802**

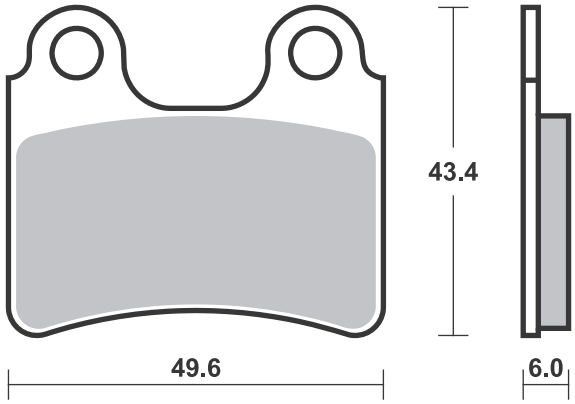

Available compounds **HF • RSI** **SBS 803**

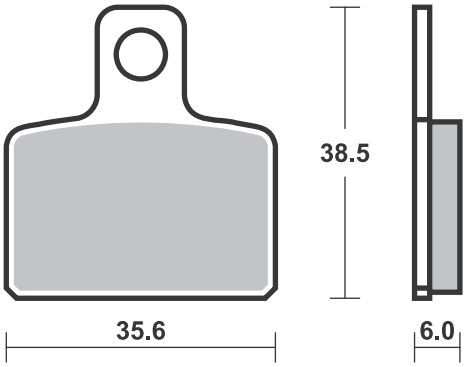

SBS 805 Recommended compound

A.P. RACING CALIPERS	
CP-6688 Four Pad Radial	
4 Piston Monoblock	
ACCOSSATO	
AGPZ01, 108 mm CNC	
Monoblock, 4 Piston/4 Pad	
AGPZ02, 108 mm Forged	
Monoblock, 4 Piston/4 Pad	
AGPZ03, 108 mm Forged	
Monoblock, 4 Piston/4 Pad	
AGPZ04, 108 mm Forged	
Monoblock, 4 Piston/4 Pad	
AGPZ06, 60 mm CNC	
Moto 3, 2 Piston/2 Pad	
BREMBO RACING CALIPERS	
Radial Monoblock	
X99C460/61, P4 34	
PVM	
4 Pad Caliper	

SBS 806 Recommended compound

KAWASAKI				
ZX-25R	250		20-20	**HS**
Z	900	RS	18-21	**HS**
Z	900	RS Cafe	18-21	**HS**
	1000	Ninja sx	20-20	**SP**
KLE	1000	Versys ABS	19-20	**SP**
KLE	1000	Versys SE	19-20	**SP**
Z	1000	ABS	15-19	**HS**
Z	1000	Ninja	14-16	**HS**
Z	1000	SE	14-16	**HS**
Z	1000	SX	11-19	**HS**
ZX	1000	H2 SX	18-19	**HS**
ZX	1000	H2 SX SE	18-19	**HS**
ZX-10R	1000	Ninja	08-15	**SP**
ZX-10R	1000	Ninja ABS	12-15	**SP**
SUZUKI				
GSX-R	600		04-10	**HS**
GSX-R	750		04-10	**HS**
DL	1000	V-Strom	14-19	**SP**
DL	1000	V-Strom XT	17-19	**SP**
DL	1000	V-Strom XT Adventure	19-19	**SP**
GSX-R	1000		04-08	**HS**
GSX-R	1000		09-11	**SP**
DL	1050	V-Strom	20-20	**SP**
DL	1050	V-Strom XT	20-20	**SP**
GSX-R	1300	Hayabusa	08-12	**HS**
M	1800	R Intruder	06-16	**HS**
M109R	1800		06-18	**HS**

SUZUKI				
M109R	1800	BOSS	14-14	**HS**
M109R2	1800		08-16	**HS**

Available compounds **DC • DS-1 • DS-2** **SBS 805**

1 set = 4 pcs.

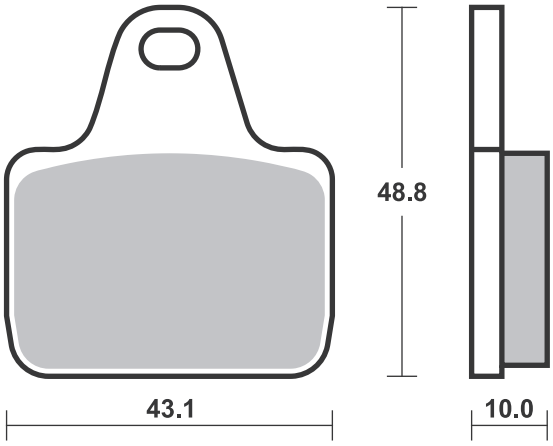

Available compounds **HS • SP • DC • RST • DS-1 • DS-2** **SBS 806**

HS / SP - Th. 8.0
RST / DC / DS - Th. 9.0

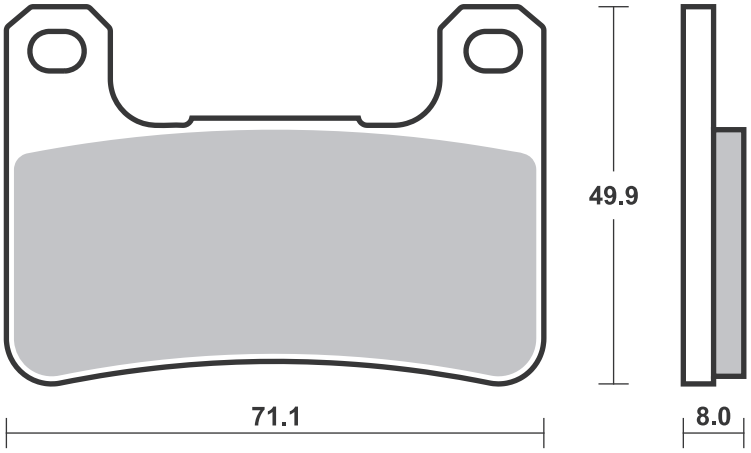

SBS 807 Recommended compound

HARLEY DAVIDSON					
XL	883	C Sportster			
		Custom	04 - 13	**H.HS**	
XL	883	L Sportster			
		Low	06 - 13	**H.HS**	
XL	883	L Super Low	11 - 13	**H.HS**	
XL	883	N Iron	13 - 13	**H.HS**	
XL	883	R Roadster	10 - 13	**H.HS**	
XL	883	Sportster	04 - 13	**H.HS**	
XL	883	Sportster R	05 - 13	**H.HS**	
XL	1200	C Sportster			
		Custom	04 - 13	**H.HS**	
XL	1200	L Sportster			
		Low	07 - 10	**H.HS**	
XL	1200	N Nightster	07 - 12	**H.HS**	
XL	1200	R Sportster			
		Roadster	04 - 09	**H.HS**	
XL	1200	V Seventy-Two	11 - 13	**H.HS**	
XL	1200	X Forty-Eight	11 - 13	**H.HS**	

SBS 808 Recommended compound

HARLEY DAVIDSON					
XL	883	C Sportster			
		Custom	04 - 13		**H.LS**
XL	883	L Sportster			
		Low	06 - 13		**H.LS**
XL	883	L Super Low	11 - 13		**H.LS**
XL	883	N Iron	13 - 13		**H.LS**
XL	883	R Roadster	10 - 13		**H.LS**
XL	883	Sportster	04 - 13		**H.LS**
XL	883	Sportster R	05 - 13		**H.LS**
XL	1200	C Sportster			
		Custom	04 - 13		**H.LS**
XL	1200	L Sportster			
		Low	07 - 10		**H.LS**
XL	1200	N Nightster	07 - 12		**H.LS**
XL	1200	R Sportster			
		Roadster	04 - 09		**H.LS**
XL	1200	V Seventy-Two	11 - 13		**H.LS**
XL	1200	X Forty-Eight	11 - 13		**H.LS**
XR	1200		08 - 10		**H.LS**
XR	1200	X	10 - 13		**H.LS**

Available compounds **H.HF • H.CT • H.HS** **SBS 807**

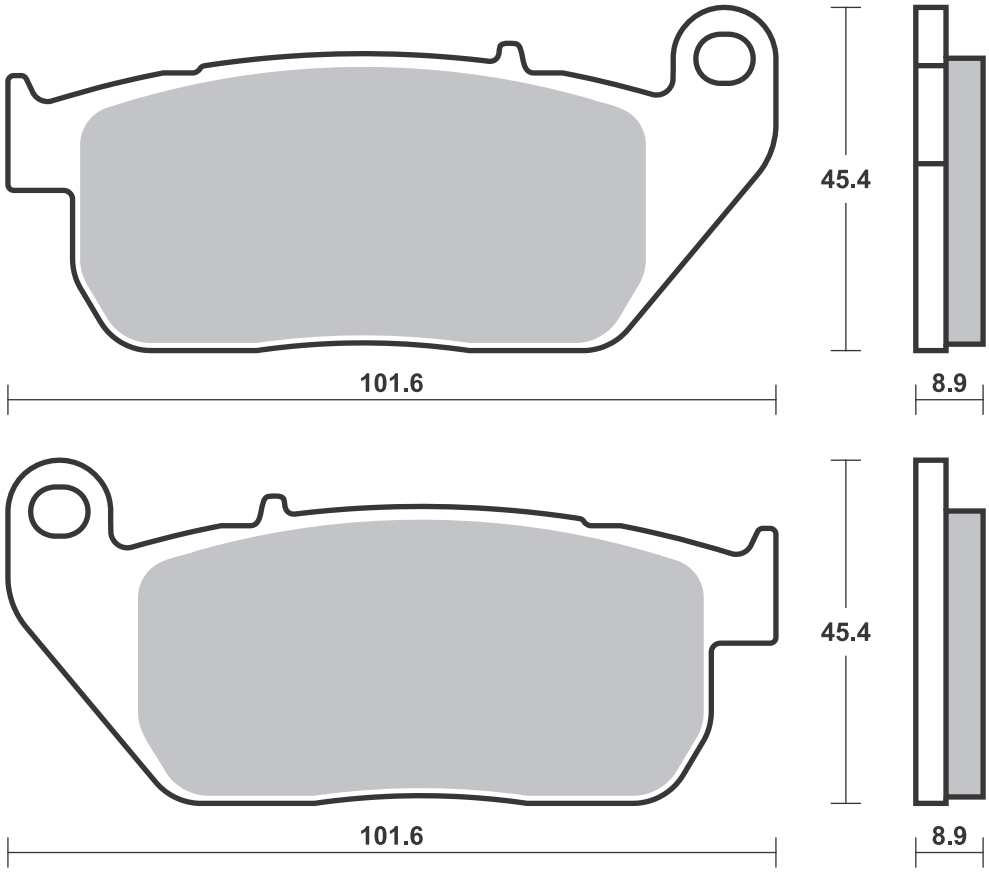

Available compounds **H.HF • H.CT • H.LS** **SBS 808**

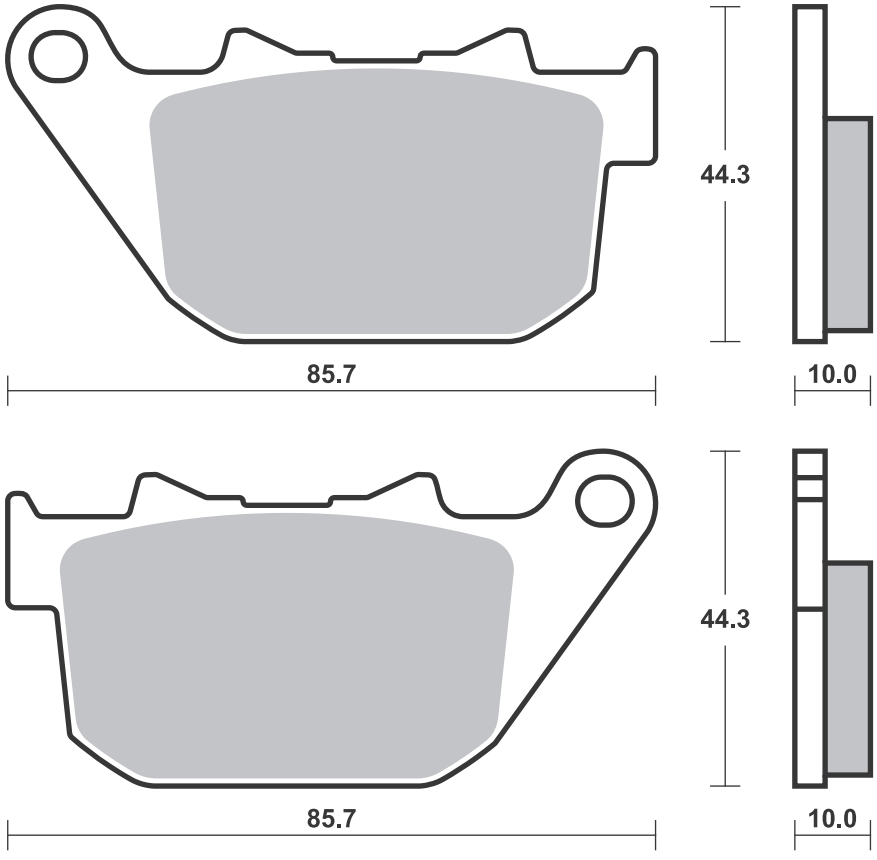

Dimensions in mm / Dimensions en mm • 1” = 25.4 mm , 1 mm = 0.04”

SBS 809 Recommended compound

HEL					
4 Piston Billet Caliper					
HONDA					
CBR	600	RR	05-08	**HS**	
CBR	600	RR ABS	09-18	**HS**	
VFR	800	F	14-16	**HS**	
VFR	800	X Crossrunner	15-16	**HS**	
CB	1000	R	08-16	**HS**	
CBR	1000	RR Fireblade	04-08	**HS**	
CBR	1000	RR Fireblade	09-16	**SP**	

SBS 810 Recommended compound

ADLY					
	300	Cross X Over	07-11	**SI**	
	300	Cross X Road	07-11	**SI**	
ATV	300	Sport	07-13	**SI**	
	320	S	07-13	**SI**	
	320	U	07-13	**SI**	
ARCTIC CAT					
	250	DVX	06-09	**SI**	
	300	DVX	09-16	**SI**	
CAN-AM					
DS	250		08-18	**SI**	**SI**
CECTEK					
	500	EFI Gladiator	09-13	**HF**	
CPI					
	250	XS ATV	07-08	**SI**	
KAWASAKI					
KVF	300	Brute Force	13-17	**SI**	**SI**
KYMCO					
	250	MXU	06-14	**SI**	
	250	Urban Quad	06-06	**SI**	
KXR	250		04-14	**SI**	
	300	Maxxer	06-13	**SI**	
	300	Maxxer Supermoto	15-15	**SI**	
	300	MXU	06-17	**SI**	**SI**
	500	MXU	06-08	**SI**	**SI**

KYMCO					
	500	UXV 4x4	08-14	**SI**	**SI**
	550	MXU	12-20		**SI**
	700	MXU	13-20		**SI**
SYM					
SB	125	Wolf Ni	11-13		**HF**
	200	Quadlander	12-13	**SI**	
	200	Trackrunner	05-08	**SI**	
	250	Quadlander	06-07	**SI**	
SN	250	Ni Wolf	14-15		**HF**
	300	City Max	06-07	**SI**	
	300	Quadlander	06-13	**SI**	**SI**
	300	Wolf Cafe Racer	15-15		**HF**
	300	Wolf Classic	15-15		**HF**
SB	300	Cafe Racer	16-17		**HF**
	600	Quad Raider	08-15	**SI**	**SI**

Available compounds **HS • SP • DC • RST • DS-1 • DS-2** **SBS 809**

HS / SP - Th. 8.0
RST / DC / DS - Th. 9.0

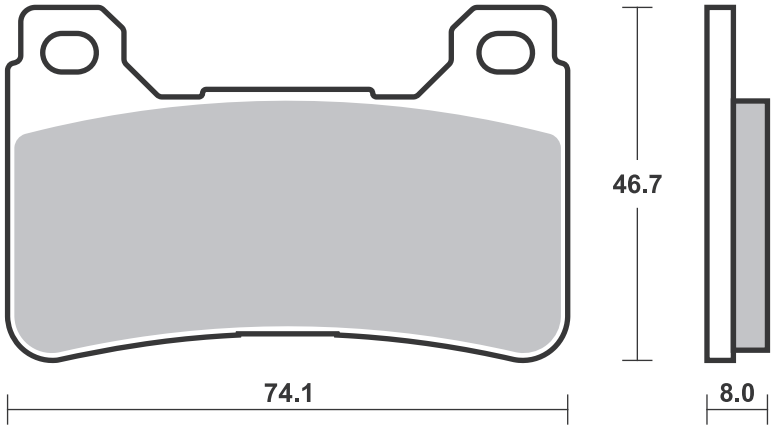

Available compounds **HF • RQ • CS • SI • RSI** **SBS 810**

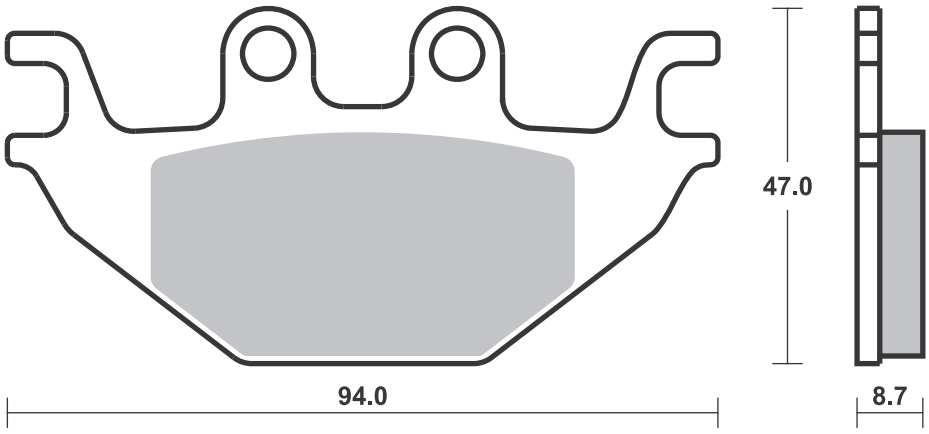

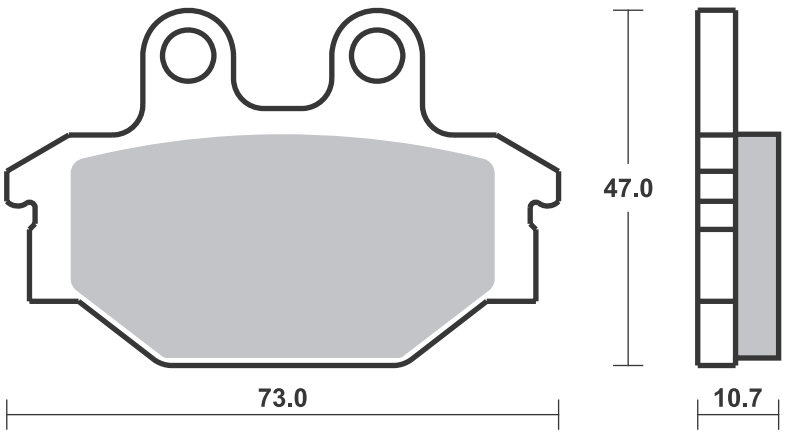

SBS 813 Recommended compound

HONDA					
TRX	420	FA / FPA	09-13		**SI**
TRX	450	R	04-09		**SI**
TRX	650	FA Rincon	03-05		**SI**
TRX	650	FGA Rincon	04-05		**SI**
TRX	680	FA6 Rincon	06-15		**SI**
TRX	680	FGA6 Rincon	06-15		**SI**

SBS 814 Recommended compound

BETA					
R	150		10-13	**HF**	
HYOSUNG					
GT	125		07-10	**HF**	**HF**
GT	125	Comet	04-06	**HF**	**HF**
GT	125	Naked	13-13	**HF**	**HF**
GT	125	R Supersport	07-16	**HF**	**HF**
GV	125	Aguila	05-11	**HF**	
RT	125	Karion	07-09	**HF**	**HF**
RX	125	SM	07-11	**HF**	**HF**
XRX	125		07-09	**HF**	**HF**
GT	250	Comet	03-08	**HF**	**HF**
GT	250	iR	13-14	**HS**	**LS**
GT	250	P	13-13	**HF**	**HF**
GT	250	R	07-12	**HF**	**HF**
GT	650		04-12	**HS**	**LS**
GT	650	i	13-13		**LS**

HYOSUNG					
GT	650	i Naked	15-15		**LS**
GT	650	iR	13-14		**LS**
GT	650	P	16-16	**HS**	**LS**
GT	650	R	05-13	**HS**	**LS**
GT	650	S	05-13	**HS**	**LS**
GT	650	TTC	07-11	**HS**	**LS**
GT	650	TTC / Custom Trendkiller	07-11	**HS**	**LS**
GT	650	X	07-11	**HS**	**LS**
GV	650	Aguila	06-11	**HS**	**LS**
ST	700		11-13		**LS**
ST	700	i Deluxe	13-13		**LS**
ITALJET					
	650	Bazooka	06-06	**HS**	**LS**
	650	Grifon	06-07	**HS**	**LS**

SBS 815 Recommended compound

GAS GAS					
TXT	50	Boy	01-01	**HF**	**HF**
TXT	50	Rookie	02-03	**HF**	**HF**
MC	65		05-06	**HF**	**HF**
TXT	80	Rookie	02-03	**HF**	**HF**
	125	Pampera	04-13		**HF**
	250	Pampera	02-13		**HF**
	280	Pampera	04-08		**HF**

Available compounds **SI • RSI** **SBS 813**

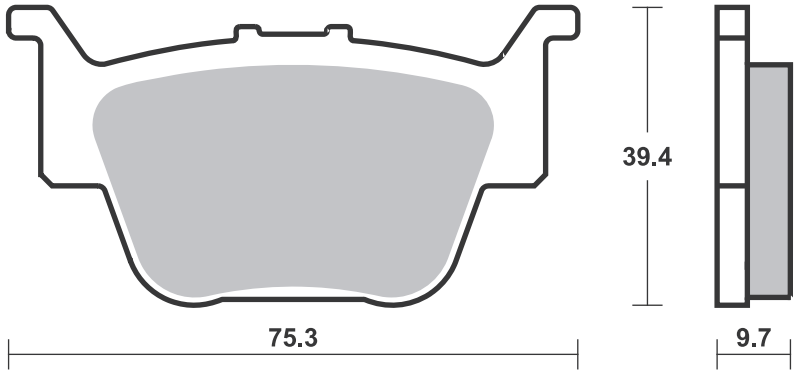

Available compounds **HF • HS • LS** **SBS 814**

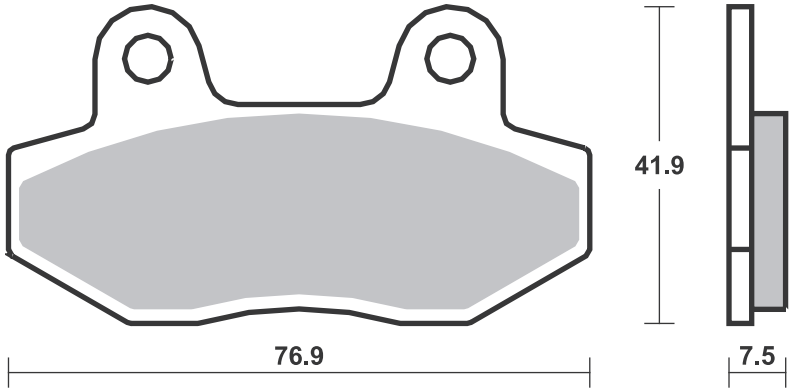

Available compounds **HF** **SBS 815**

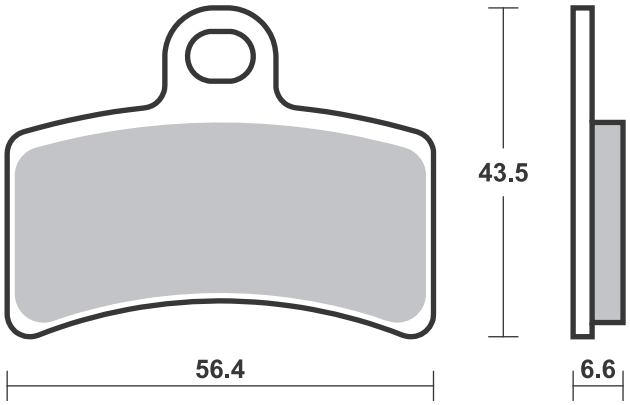

SBS 816 Recommended compound

YAMAHA				
YXR	450 Rhino	06-09	**SI**	
	660 Rhino	05-08	**SI**	
YFM	700 R Raptor	06-08	**SI**	
YFM	700 Raptor	09-12	**SI**	

SBS 817 Recommended compound

TOMOS				
MC	125 T	06-08	**HF**	
SE	125	05-08	**HF**	

Available compounds **SI • RSI** **SBS 816**

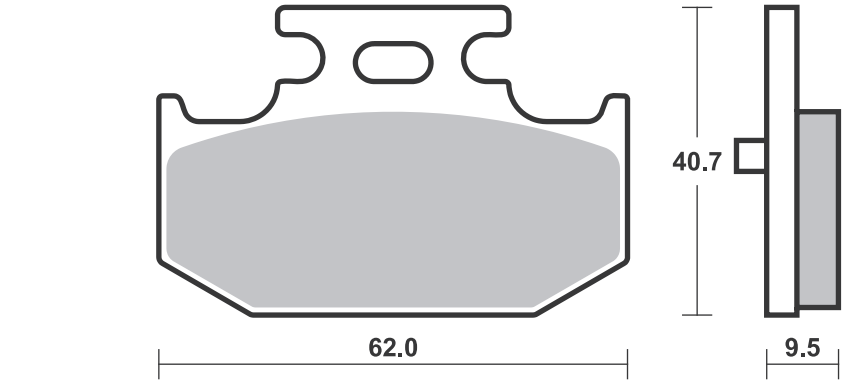

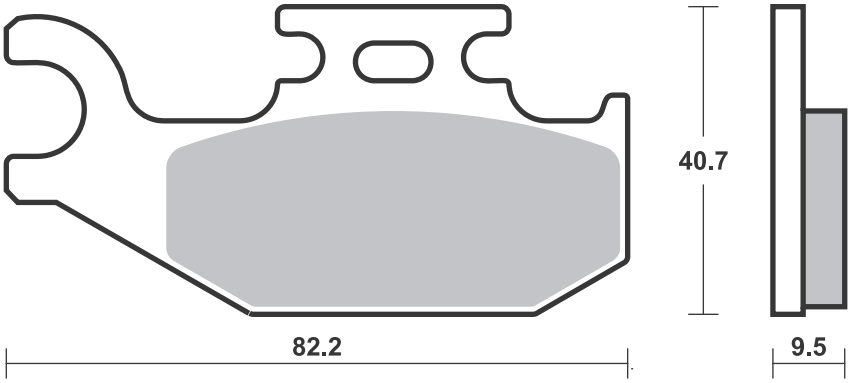

Available compounds **HF** **SBS 817**

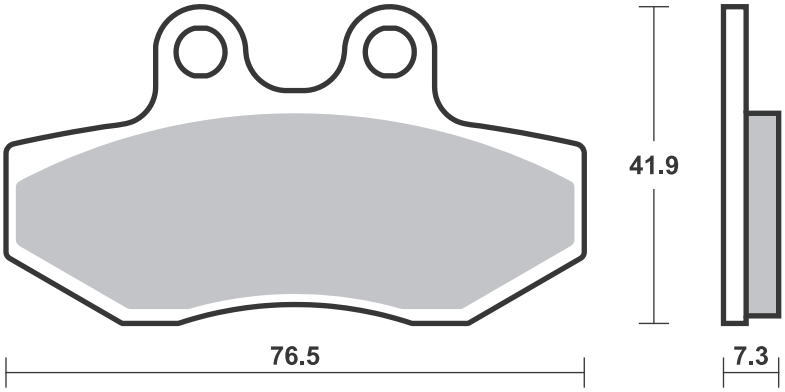

SBS 820 Recommended compound

SUZUKI				
RM	85		05-21	**RSI**

SBS 821 Recommended compound

APRILIA				
	125	Tuono ABS	17-19	**HS**
RS	125	GP	17-19	**HS**
RS-4	125	(AJP cal.)	11-19	**HS**
RS-4	125	Replica, ABS	16-19	**HS**
DERBI				
GPR	80	Cup	04-05	**HS**
GPR	125		05-06	**HS**
GPR	125	Nude	05-08	**HS**
GPR	125	Racing	09-09	**HS**
TOMOS				
SM	125	F	06-08	**HS**

Available compounds **CS • SI • RSI** **SBS 820**

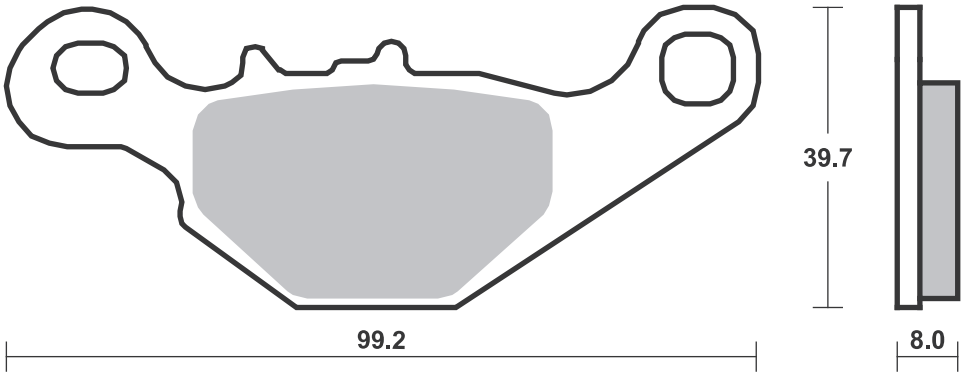

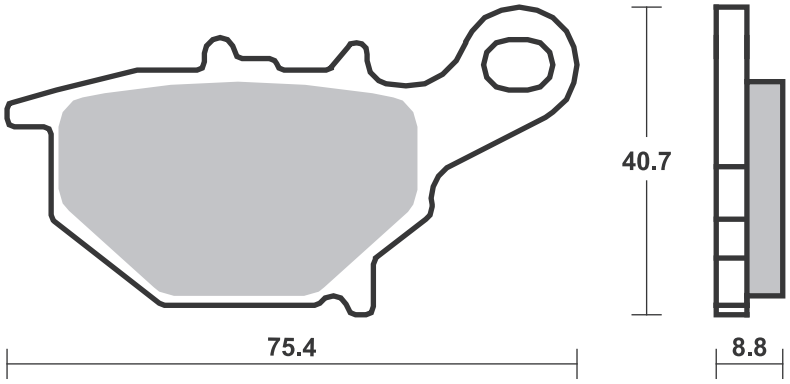

Available compounds **HF • HS** **SBS 821**

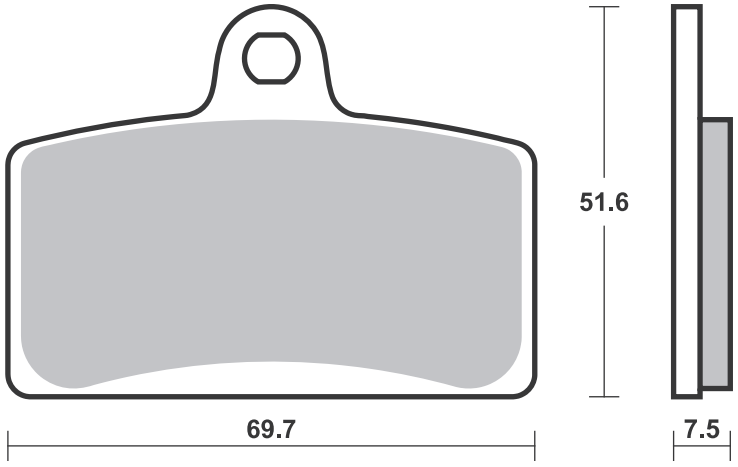

SBS 822 Recommended compound

ARCTIC CAT					
	250	2x4	05-06	**ATS**	**ATS**
	300	2x4	10-13	**ATS**	**ATS**
	300	4x4	05-05	**ATS**	**ATS**
	400	2x4/4x4 (FIS)	05-07	**ATS**	**ATS**
TRV	400		09-13	**ATS**	**ATS**
	450	H1	10-10	**ATS**	**ATS**
XC	450		11-14	**ATS**	**ATS**
	500	2x4/4x4 (FIS)	05-09	**ATS**	**ATS**
	500	TBX 4x4	05-06	**ATS**	**ATS**
	500	TRV 4x4	05-06	**ATS**	**ATS**
	550	H1	09-13	**ATS**	**ATS**
	550	LTD	09-12	**ATS**	**ATS**
	550	Prowler	09-14	**ATS**	**ATS**
TRV	550		09-14	**ATS**	**ATS**
	650	H1 4x4 Aut.	05-11	**ATS**	**ATS**
	650	Prowler	06-08	**ATS**	**ATS**
	650	V2 4x4 Aut.	05-06	**ATS**	**ATS**
	650	V2 4x4 Aut. LE	05-06	**ATS**	**ATS**
	700	Diesel	06-14	**ATS**	**ATS**
	700	H1	09-10	**ATS**	**ATS**
	700	Prowler	08-08	**ATS**	**ATS**
	700	Wildcat Sport	15-18		**ATS**
	700	Wildcat Sport LTD.	16-18		**ATS**
	700	Wildcat Sport LTD. EPS	17-18		**ATS**
	700	Wildcat Sport XT	15-18		**ATS**
	700	Wildcat Sport XT EPS	16-18		**ATS**

ARCTIC CAT					
TBX	700		12-14	**ATS**	**ATS**
TRV	700		09-12	**ATS**	**ATS**
	1000	Prowler	09-09	**ATS**	**ATS**
	1000	Thundercat	09-14	**ATS**	**ATS**
	1000	Wildcat 4X	16-18		**ATS**
	1000	Wildcat X	16-18		**ATS**
	1000	Wildcat X Ltd.	17-18		**ATS**
	1000	Wildcat X SE	17-18		**ATS**
TRV	1000		09-14	**ATS**	**ATS**
KYMCO					
	400	Maxxer	08-10	**ATS**	**ATS**
	400	MXU	08-11	**ATS**	**ATS**
	450	i Maxxer	10-14	**ATS**	**ATS**
	450	i MXU	11-14	**ATS**	**ATS**
POLARIS					
	300	Hawkeye 2x4, 4x4	06-06	**ATS**	**ATS**

SBS 825 Recommended compound

NISSIN
4 Piston Racing Caliper (2)

Available compounds **SI • RSI • ATS** **SBS 822**

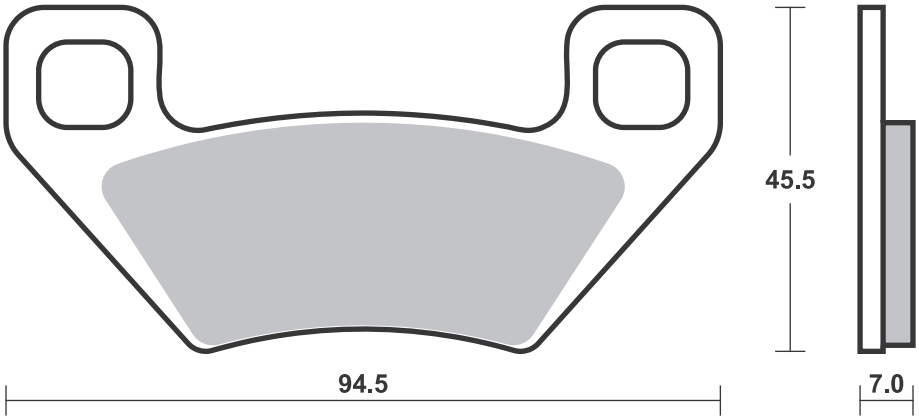

Available compounds **DC • DS-1 • DS-2** **SBS 825**

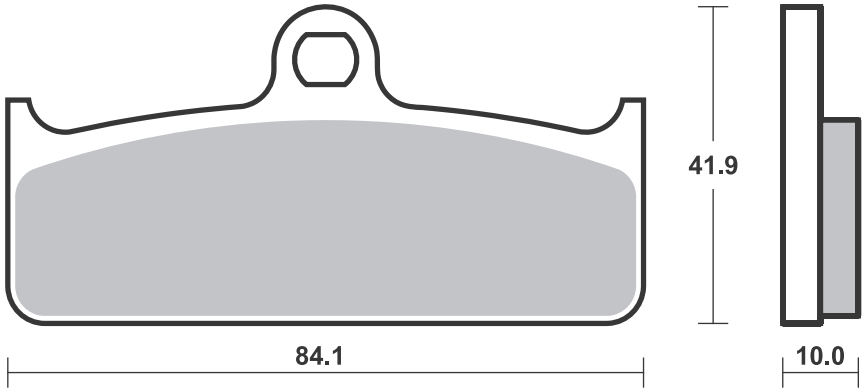

SBS 826 Recommended compound

HARLEY DAVIDSON					
XL	883	R Sportster	00-03	**H.HS**	**H.LS**
XL	883	Sportster			
		Custom	00-03	**H.HS**	**H.LS**
XLH	883	Sportster	00-03	**H.HS**	**H.LS**
XLH	883	Sportster			
		Hugger	00-03	**H.HS**	**H.LS**
VRSCA	1130	V-Rod	02-05	**H.HS**	**H.LS**
VRSCB	1130	V-Rod	04-04	**H.HS**	**H.LS**
XL	1200	Sportster			
		Custom	00-03	**H.HS**	**H.LS**
XL	1200	Sportster			
		Sport	00-03	**H.HS**	**H.LS**
XLH	1200	Sportster	00-03	**H.HS**	**H.LS**
FLHR/I	1450	Road King	00-06	**H.HS**	**H.LS**
FLHRCI	1450	Road King			
		Classic	00-06	**H.HS**	**H.LS**
FLHRS/I	1450	Road King			
		Custom	04-06	**H.HS**	**H.LS**
FLHT/I	1450	Electra			
		Glide			
		Standard	00-06	**H.HS**	**H.LS**
FLHTC/I	1450	Electra			
		Glide			
		Classic	00-06	**H.HS**	**H.LS**
FLHTCUI	1450	Ultra			
		Classic			
		Electra			
		Glide	00-06	**H.HS**	**H.LS**
FLHXI	1450	Street			
		Glide	06-06	**H.HS**	**H.LS**
FLSTC	1450	Softail	06-07	**H.HS**	**H.LS**
FLSTC/I	1450	Heritage			
		Softail			
		Classic	00-04	**H.HS**	**H.LS**
FLSTCI	1450	Softail	06-06	**H.HS**	**H.LS**
FLSTF	1450	Fat Boy	06-07	**H.HS**	**H.LS**
FLSTF/I	1450	Fat Boy	00-04	**H.HS**	**H.LS**
FLSTFI	1450	Fat Boy	06-06	**H.HS**	**H.LS**
FLSTI	1450	Heritage			
		Softail	06-06	**H.HS**	
FLSTN/I	1450	Softail			
		Deluxe	06-06	**H.HS**	**H.LS**
FLSTS/I	1450	Heritage			
		Springer	00-03		**H.LS**
FLSTSC/I	1450	Springer			
		Softail			
		Classic	06-06		**H.LS**
FLTR/I	1450	Road Glide			
		Classic	00-06	**H.HS**	**H.LS**
FXD	1450	Dyna Super			
		Glide	00-03	**H.HS**	**H.LS**
FXDBI	1450	Dyna Street			
		Bob	06-06	**H.HS**	**H.LS**
FXDC/I	1450	Dyna Super			
		Glide			
		Custom	05-06	**H.HS**	**H.LS**
FXDI	1450	35th			
		Anniversary			
		Super Glide	06-06	**H.HS**	
FXDI	1450	Dyna Super			
		Glide	04-07	**H.HS**	**H.LS**
FXDL	1450	Dyna Low			
		Rider	00-03	**H.HS**	**H.LS**
FXDLI	1450	Dyna Low			
		Rider	04-06	**H.HS**	**H.LS**
FXDS	1450	Dyna			
		Convertible	00-02	**H.HS**	**H.LS**

HARLEY DAVIDSON					
FXDWG	1450	Dyna Wide			
		Glide	00-03	**H.HS**	**H.LS**
FXDWGI	1450	Dyna Wide			
		Glide	04-06	**H.HS**	**H.LS**
FXDX	1450	Dyna Super			
		Glide Sport	00-03	**H.HS**	**H.LS**
FXDXI	1450	Dyna Super			
		Glide Sport	04-06	**H.HS**	**H.LS**
FXDXT	1450	Dyna Super			
		Glide			
		T-Sport	00-03	**H.HS**	**H.LS**
FXST/I	1450	Softail			
		Standard	00-06	**H.HS**	**H.LS**
FXST/I	1450	Softail			
		Standard	06-06	**H.HS**	
FXSTB/I	1450	Night Train	00-06	**H.HS**	**H.LS**
FXSTB/I	1450	Night Train	06-06	**H.HS**	
FXSTD/I	1450	Softail			
		Deuce	00-06	**H.HS**	**H.LS**
FXSTD/I	1450	Softail			
		Deuce	06-06	**H.HS**	
FXSTS/I	1450	Softail	05-05		**H.LS**
FXSTS/I	1450	Springer			
		Softail	00-04		**H.LS**
FLHR	1584	Road King	07-07	**H.HS**	**H.LS**
FLHRC	1584	Road King			
		Classic	07-07	**H.HS**	**H.LS**
FLHRS	1584	Road King			
		Custom	07-07	**H.HS**	**H.LS**
FLHT	1584	Electra			
		Glide			
		Standard	07-07	**H.HS**	**H.LS**
FLHTC	1584	Electra			
		Glide			
		Classic	07-07	**H.HS**	**H.LS**
FLHTCU	1584	Ultra			
		Classic			
		Electra			
		Glide	07-08	**H.HS**	**H.LS**
FLHX	1584	Street Glide	07-07	**H.HS**	**H.LS**
FLSTC	1584	Heritage			
		Softail			
		Classic	07-07	**H.HS**	
FLSTF	1584	Fat Boy	07-07	**H.HS**	
FLSTN	1584	Softail			
		Deluxe	07-07	**H.HS**	
FXD	1584	Dyna Super			
		Glide	07-07	**H.HS**	**H.LS**
FXDB	1584	Dyna Street			
		Bob	07-07	**H.HS**	**H.LS**
FXDC	1584	Dyna Super			
		Glide			
		Custom	07-07	**H.HS**	**H.LS**
FXDL	1584	Dyna Low			
		Rider	07-07	**H.HS**	**H.LS**
FXDWG	1584	Dyna Wide			
		Glide	07-07	**H.HS**	**H.LS**
FXST	1584	Softail			
		Standard	07-07	**H.HS**	
FXSTB	1584	Night Train	07-07	**H.HS**	
FXSTC	1584	Softail			
		Custom	07-07	**H.HS**	
FXSTD	1584	Softail			
		Deuce	07-07	**H.HS**	

Available compounds **H.HF • H.CT • H.HS • H.LS** **SBS 826**

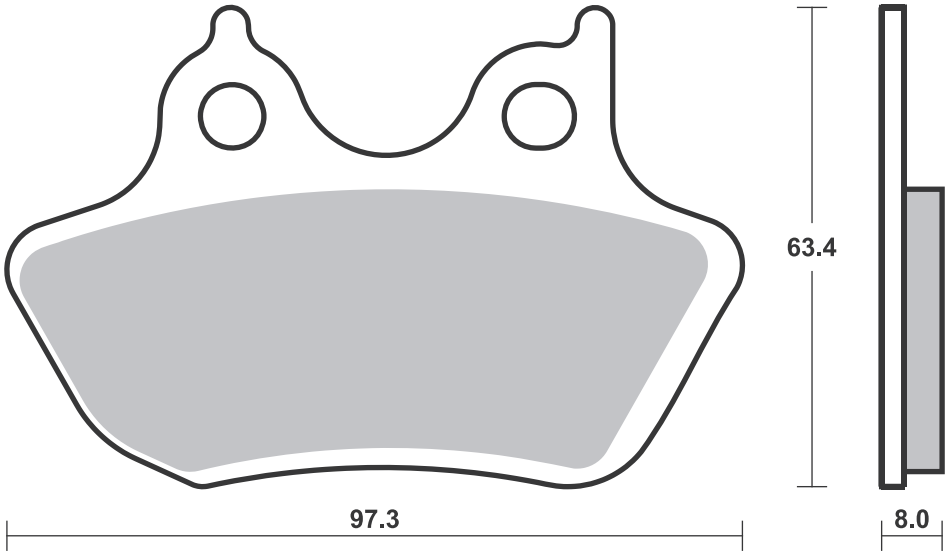

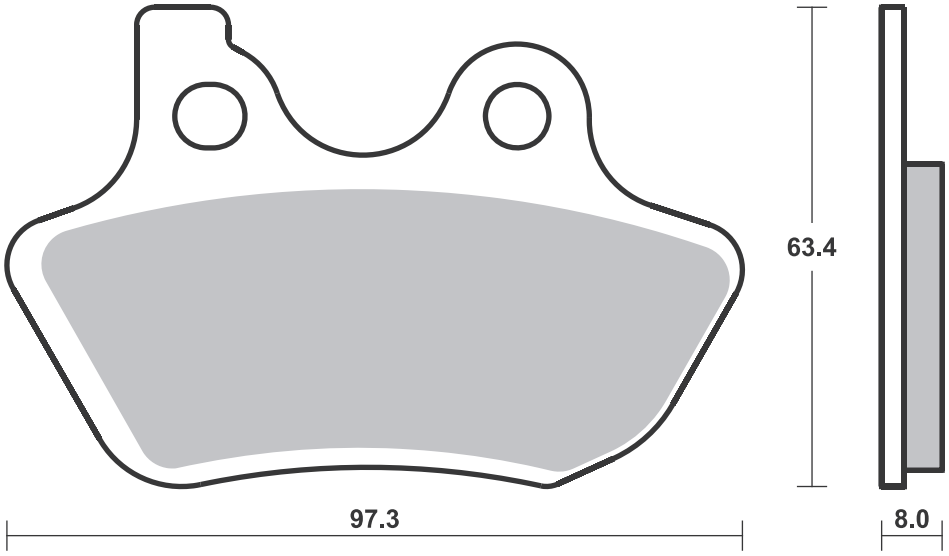

Dimensions in mm / Dimensions en mm • 1” = 25.4 mm , 1 mm = 0.04”

SBS 827 Recommended compound

ARCTIC CAT					
	250	2x4 (Man.			
		Hand Brake)	99-04		**ATS**
	250	4x4 (Man.			
		Hand Brake)	00-04		**ATS**
	300	2x4 (Man.			
		Hand Brake)	98-04		**ATS**
	300	4x4 (Man.			
		Hand Brake)	98-05		**ATS**
	375	2x4/4x4 (Man.			
		Hand Brake)	02-02		**ATS**
	400	2x4 (Man.			
		Hand Brake)	98-02		**ATS**
	400	2x4/4x4 (FIS)			
		Aut.(Man.			
		Hand Brake)	03-04		**ATS**
	400	2x4/4x4 (FIS)			
		(Man.			
		Hand Brake)	02-04		**ATS**
	400	4x4 (Man.			
		Hand Brake)	98-04		**ATS**
	400	TBX 4x4 (Man.			
		Hand Brake)	04-04		**ATS**
	454	Bear Cat			
		2x4/4x4 (Man.			
		Hand Brake)	98-98		**ATS**
	500	2x4 (FIS)(Man.			
		Hand Brake)	02-02		**ATS**

ARCTIC CAT					
	500	2x4 (Man.			
		Hand Brake)	02-02		**ATS**
	500	4x4 (FIS)			
		Aut.(Man.			
		Hand Brake)	02-03		**ATS**
	500	4x4 (FIS)(Man.			
		Hand Brake)	02-03		**ATS**
	500	4x4 (Man.			
		Hand Brake)	98-02		**ATS**
	500	TBX 4x4 (Man.			
		Hand Brake)	03-04		**ATS**
	500	TBX 4x4			
		Aut.(Man.			
		Hand Brake)	02-02		**ATS**
	500	TRV 4x4 (Man.			
		Hand Brake)	03-04		**ATS**

SBS 828 Recommended compound

HONDA					
CBR	250	R ABS			
		(Nissin cal)	11-13		**HS**
CB	600	Hornet ABS	07-12		**HS**
CBR	600	F ABS	11-13		**HS**
DN-01	680		08-11		**HS**
NC	700	D Integra	12-13		**HS**
NC	700	SA ABS	12-13		**HS**
NC	700	SD ABS	12-13		**HS**
NC	700	XA ABS	12-13		**HS**
NC	700	XD ABS	12-13		**HS**
NT	700	Deauville ABS	06-12		**HS**
NT	700	V Varadero,			
		ABS	10-13		**HS**
VT	750	C2S ABS	13-14		**HS**
VT	750	CS ABS	13-14		**HS**
VFR	800	Crossrunner	11-13		**HS**
VFR	800	Interceptor	06-18		**HS**
VFR	800	Interceptor			
		ABS	06-18		**HS**
CB	1000	R ABS	08-16		**HS**
CB	1100		13-13		**HS**
VFR	1200	XC			
		Crosstourer	12-19		**SP**
VFR	1200	XDC			
		Crosstourer			
		w/DCT	12-19		**SP**
CB	1300	S	11-15		**HS**
CTX	1300		14-18		**HS**
ST	1300	, ABS	08-13		**HS**
VT	1300	CXA A Fury			
		ABS	10-18		**HS**

SUZUKI					
C109R	1800		08-12		**HS**

Available compounds **ATS** **SBS 827**

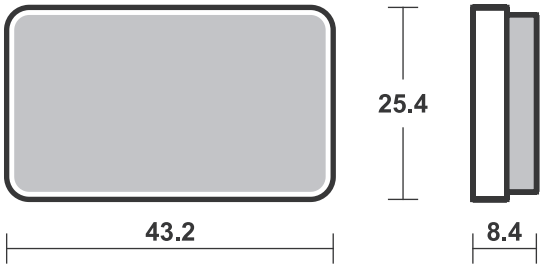

Available compounds **HF • HS • LS • SP** **SBS 828**

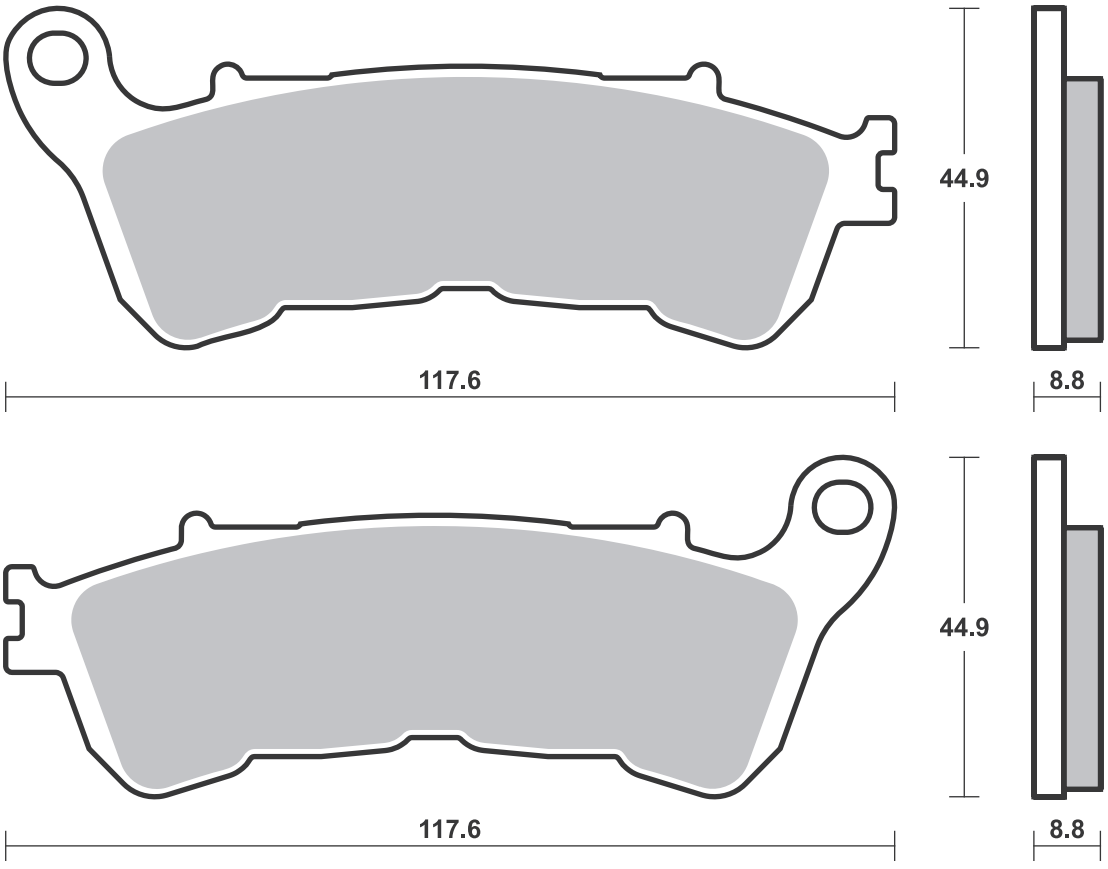

Dimensions in mm / Dimensions en mm • 1” = 25.4 mm , 1 mm = 0.04”

SBS 829 Recommended compound

HONDA					
TRX	500	all models	05-14	**SI**	
TRX	680	FA6 Rincon	06-15	**SI**	
TRX	680	FGA6			
		Rincon	06-15	**SI**	
TRX	700	XX	08-12		**SI**

SBS 830 Recommended compound

HARLEY DAVIDSON					
VRSCA	1130	V-Rod	06-10	**H.HS**	**H.LS**
VRSCD	1130	Night Rod	06-08	**H.HS**	**H.LS**
VRSCR	1130	Street Rod	06-07	**H.HS**	**H.LS**
VRSCAW	1250	V-Rod	08-10	**H.HS**	**H.LS**
VRSCDX	1250	Night Rod			
		Special	08-17	**H.HS**	**H.LS**
VRSCF	1250	Muscle	09-17	**H.HS**	**H.LS**
VRSCX	1250	V-Rod	08-10	**H.HS**	**H.LS**
FLHR	1584	Road King	08-10	**H.HS**	**H.LS**
FLHRC	1584	Road King			
		Classic	08-10	**H.HS**	**H.LS**
FLHT	1584	Electra			
		Glide			
		Standard	08-10	**H.HS**	**H.LS**
FLHTC	1584	Electra			
		Glide			
		Classic	08-10	**H.HS**	**H.LS**
FLHTCi	1584	Ultra Electra			
		Glide			
		Classic	08-10	**H.HS**	**H.LS**
FLHTCU	1584	Ultra Classic			
		Electra			
		Glide	09-10	**H.HS**	**H.LS**
FLHTK	1584	Electra			
		Glide			
		Ultra LTD	10-10	**H.HS**	**H.LS**
FLHX	1584	Street Glide	08-10	**H.HS**	**H.LS**
FLTR	1584	Road Glide	08-10	**H.HS**	**H.LS**
FLTRU	1584	Road Glide			
		Ultra	11-16	**H.HS**	**H.LS**
FLTRX	1584	Road Glide			
		Custom	10-10	**H.HS**	**H.LS**
FLHR	1690	Road King	11-16	**H.HS**	**H.LS**
FLHRC	1690	Road King			
		Classic	11-16	**H.HS**	**H.LS**
FLHTCU	1690	Ultra Classic			
		Electra Glide	11-16	**H.HS**	**H.LS**
FLHTCUL	1690	Electra			
		Glide			
		Ultra			
		Classic Low	15-16	**H.HS**	**H.LS**

HARLEY DAVIDSON					
FLHTCUTG	1690	Tri Glide			
		Ultra			
		Classic			
		Trike	09-13	**H.HS**	
FLHTK	1690	Ultra			
		Classic			
		Electra			
		Glide	10-16	**H.HS**	**H.LS**
FLHTKL	1690	Ultra			
		Limited			
		Low	15-16	**H.HS**	**H.LS**
FLHX	1690	Street			
		Glide	11-16	**H.HS**	**H.LS**
FLHXS	1690	Street			
		Glide			
		Special	14-16	**H.HS**	**H.LS**
FLHXXX	1690	Street			
		Glide			
		Trike	10-11	**H.HS**	
FLTRX	1690	Road			
		Glide	15-16	**H.HS**	**H.LS**
FLTRXS	1690	Road			
		Glide			
		Special	15-16	**H.HS**	**H.LS**
FLHR	1750	Road			
		King	17-20	**H.HS**	**H.LS**
FLHRC	1750	Road King			
		Classic	17-17	**H.HS**	**H.LS**
FLHRXS	1750	Road King			
		Special	18-20	**H.HS**	
FLHTCU	1750	Ultra			
		Classic			
		Electra			
		Glide	17-19	**H.HS**	**H.LS**
FLHTK	1750	Ultra			
		Limited	17-19	**H.HS**	**H.LS**
FLHTKL	1750	Ultra			
		Limited			
		Low	17-19	**H.HS**	**H.LS**
FLHX	1750	Street			
		Glide	17-19	**H.HS**	**H.LS**

HARLEY DAVIDSON					
FLHX	1750	Street			
		Glide			
		Special	17-19	**H.HS**	**H.LS**
FLHXS	1750	Street			
		Glide			
		Special	17-19	**H.HS**	**H.LS**
FLTRU	1750	Road Glide			
		Ultra	17-19	**H.HS**	**H.LS**
FLTRX	1750	Road Glide	17-19	**H.HS**	**H.LS**
FLTRXS	1750	Road Glide			
		Special	17-20	**H.HS**	**H.LS**
FLHRSE5	1802	CVO Road			
		King	14-15	**H.HS**	**H.LS**
FLHTKSE	1802	CVO			
		Limited	14-16	**H.HS**	**H.LS**
FLHXSE	1802	CVO Street			
		Glide	10-16	**H.HS**	**H.LS**
FLTRUSE	1802	CVO Road			
		Glide Ultra	11-16	**H.HS**	**H.LS**
FLHTKSE	1870	CVO			
		Limited	17-17	**H.HS**	**H.LS**
FLHXSE	1870	CVO Street			
		Glide	17-17	**H.HS**	**H.LS**
FLHTKSE	1917	CVO Limited	18-19	**H.HS**	**H.LS**
FLHXSE	1917	CVO Street			
		Glide	18-19	**H.HS**	**H.LS**
FLTRXSE	1917	CVO Road			
		Glide	18-19	**H.HS**	**H.LS**

Available compounds **SI** **SBS 829**

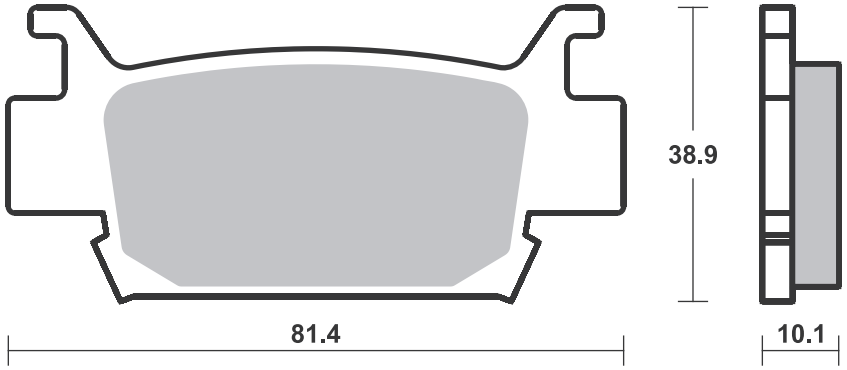

Available compounds **H.HF • H.CT • H.HS • H.LS** **SBS 830**

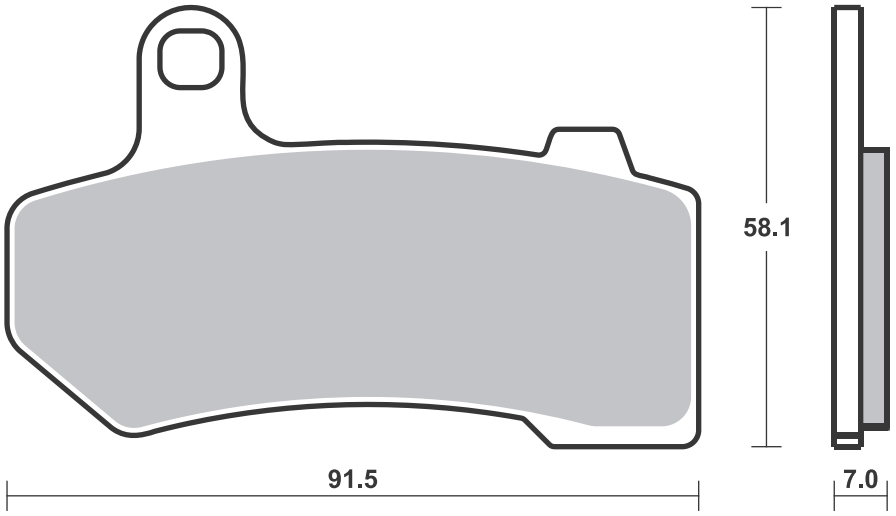

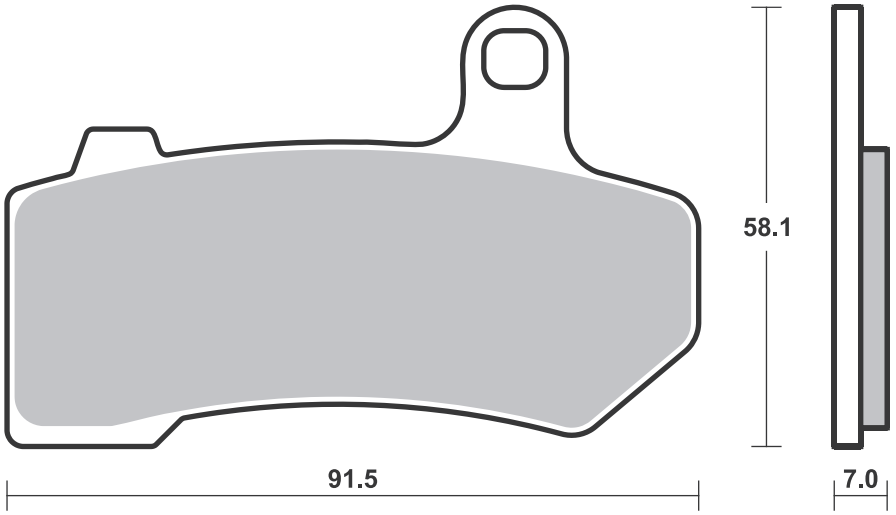

SBS 832 Recommended compound

BENELLI				
BN	302	R	17 - 19	**LS**
BN	302	S	18 - 19	**LS**
TRK	502		18 - 19	**LS**
TRK	502	X	19 - 19	**LS**

SBS 833 Recommended compound

SUZUKI				
GSR	600		06 - 10	**LS**
GSX-R	600		06 - 10	**LS**
GSX-R	750		06 - 10	**LS**
DL	1000	V-Strom	14 - 19	**LS**
DL	1000	V-Strom XT	17 - 19	**LS**
DL	1000	V-Strom XT Adventure	19 - 19	**LS**
GSX-R	1000		07 - 08	**LS**
DL	1050	V-Strom	20 - 20	**LS**
DL	1050	V-Strom XT	20 - 20	**LS**
GSX-R	1300	Hayabusa	08 - 21	**LS**
	1340	B-King	08 - 14	**LS**

Available compounds **HF • LS** **SBS 832**

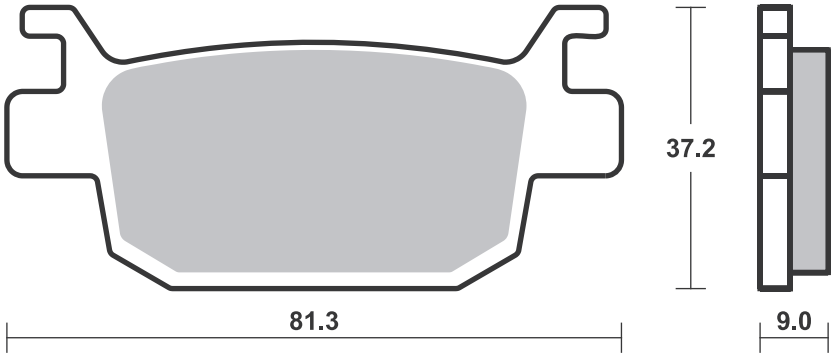

Available compounds **HF • LS • RQ** **SBS 833**

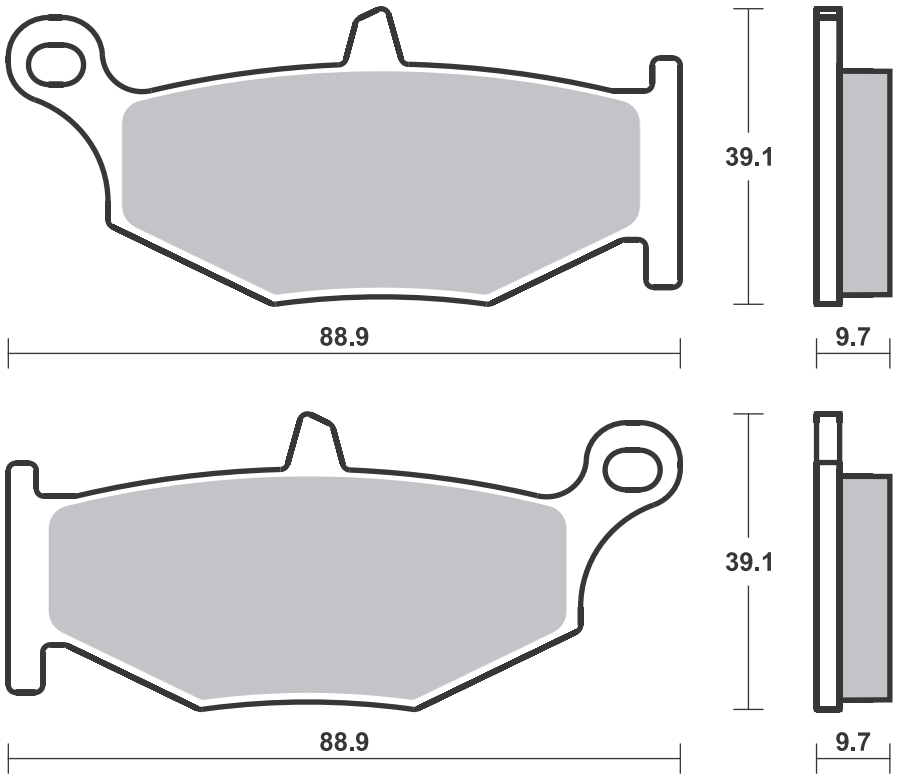

Dimensions in mm / Dimensions en mm • 1” = 25.4 mm , 1 mm = 0.04”

SBS 834 Recommended compound

HONDA				
CBR	600	F	11-13	**LS**
CBR	600	RR	07-08	**LS**
CBR	600	RR ABS	09-18	**LS**
CBR	1000	RR Fireblade	06-19	**LS**
CBR	1000	RR SP	14-19	**LS**
CBR	1000	RR SP2	17-19	**LS**
KAWASAKI				
ZX-6R	636	Ninja	13-18	**LS**
ZX-6R	636	Ninja KRT ABS	13-18	**LS**
ZX-10R	1000	Ninja	11-20	**LS**
ZX-10R	1000	Ninja ABS	12-15	**LS**
ZX-10R	1000	Ninja KRT	16-18	**LS**
ZX-10R	1000	Ninja SE	18-20	**LS**
ZX-10RR	1000	Ninja	17-20	**LS**
SUZUKI				
GSX-R	600		11-21	**LS**
GSX-R	750		11-18	**LS**
GSX-R	1000		09-21	**LS**
GSX-R	1000	R	17-21	**LS**
YAMAHA				
YZF	600	R6	17-20	**LS**
YZF	600	R6 Quick change / Front wheel	17-20	**LS**
YZF	1000	R1	15-21	**LS**
YZF	1000	R1M	15-21	**LS**

YAMAHA				
YZF	1000	R1S	16-16	**LS**

SBS 835 Recommended compound

SUZUKI				
KLT-A	400	King Quad	08-14	**SI**
KLT-F	400	King Quad	08-14	**SI**
LT-A	400	King Quad	08-14	**SI**
LT-F	400	King Quad	08-14	**SI**
LT-A	450	King Quad	08-14	**SI**
LT-A	500	King Quad	11-14	**SI**
LT-A	700	King Quad	05-11	**SI**
LT-A	750	King Quad	08-14	**SI**

Available compounds **HF • LS • RQ** **SBS 834**

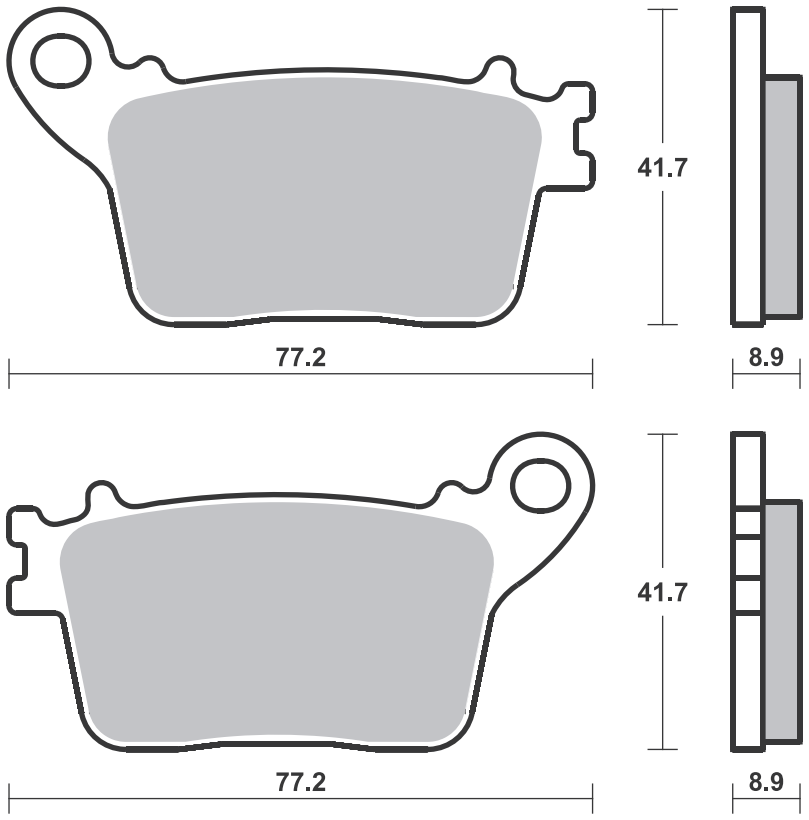

Available compounds **SI • RSI** **SBS 835**

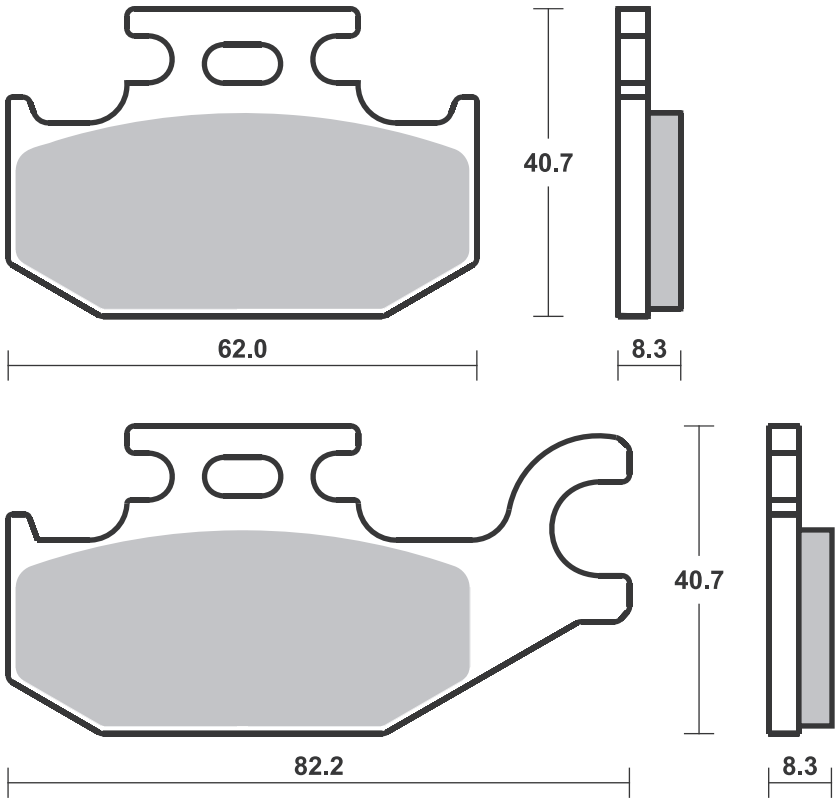

SBS 836 Recommended compound

SUZUKI				
KLT-A	400	King Quad	08-14	**SI**
KLT-F	400	King Quad	08-14	**SI**
LT-A	400	King Quad	08-14	**SI**
LT-F	400	King Quad	08-14	**SI**
LT-A	450	King Quad	08-14	**SI**
LT-A	500	King Quad	11-14	**SI**
LT-A	700	King Quad	05-11	**SI**
LT-A	750	King Quad	08-14	**SI**

SBS 838 Recommended compound

KAWASAKI				
ZX-6R	600	Ninja	07-17	**HS**
Z	750	R	11-12	**HS**
ZG	1400	Concours	07-10	**HS**
ZX-14R	1400	Ninja	06-15	**HS**
ZX-14R	1400	Ninja ABS	07-15	**HS**
SUZUKI				
	1300	B-King	07-07	**HS**

Available compounds **SI • RSI** **SBS 836**

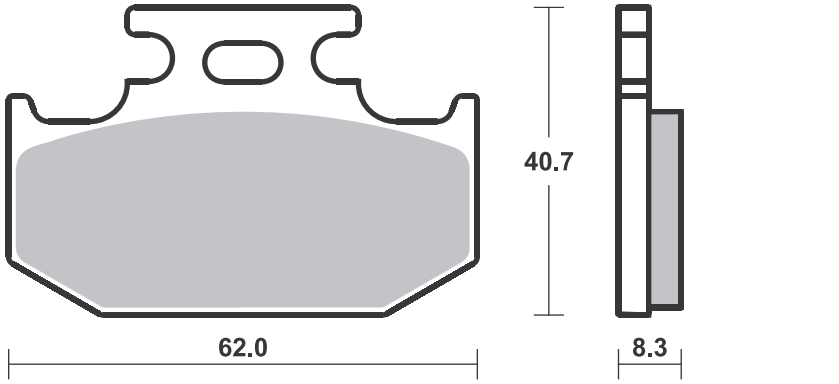

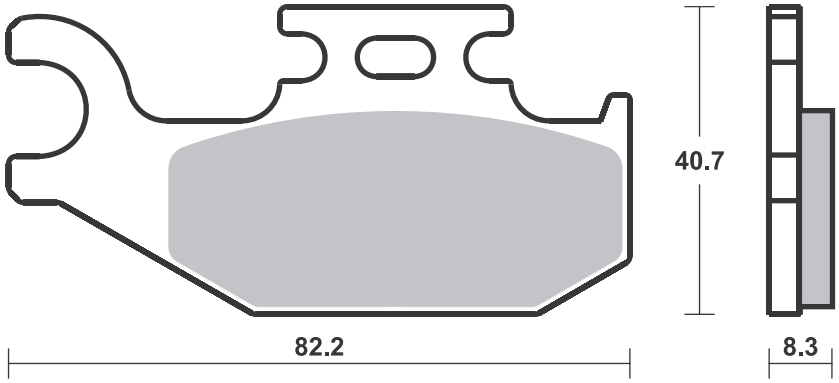

Available compounds **HS • SP • DC • RST • DS-1 • DS-2** **SBS 838**

1 set = 4 pcs.

HS / SP - Th. 7.8
RST / DC / DS - Th. 9.0

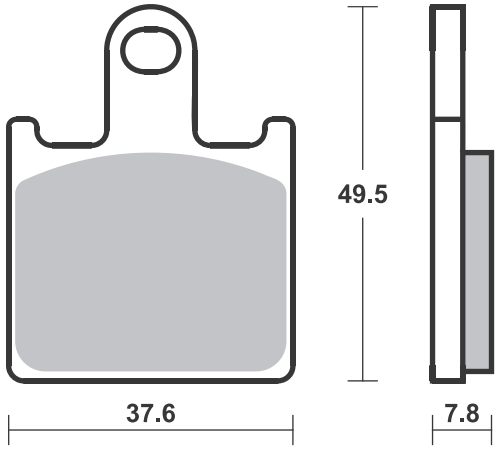

SBS 839 Recommended compound

YAMAHA					
YZF	1000	R1 (4-pad)	07-14	**SP**	
YZF	1000	R1 (4-pad) ABS	12-14	**SP**	
VMX	1700	V-Max	09-18	**HS**	

SBS 840 Recommended compound

FANTIC					
XX	125		20-21	**RSI**	
YAMAHA					
YZ	125		08-21	**RSI**	
WR	250	F Efi	18-21	**SI**	
WR	250	F Enduro GP	18-18	**SI**	
YZ	250		08-21	**RSI**	
YZ	250	F	07-13	**RSI**	
YZ	250	F Efi	14-20	**RSI**	
YZ	250	FX Efi	15-15	**SI**	
YZ	250	X	16-17	**SI**	
WR	450	F Efi	16-20	**SI**	
WR	450	F Enduro GP	18-18	**SI**	
YZ	450	F	08-19	**RSI**	
YZ	450	FX	16-20	**SI**	

Available compounds **HS • SP • DC • RST • DS-1** **SBS 839**

1 set = 2 pcs. small / large

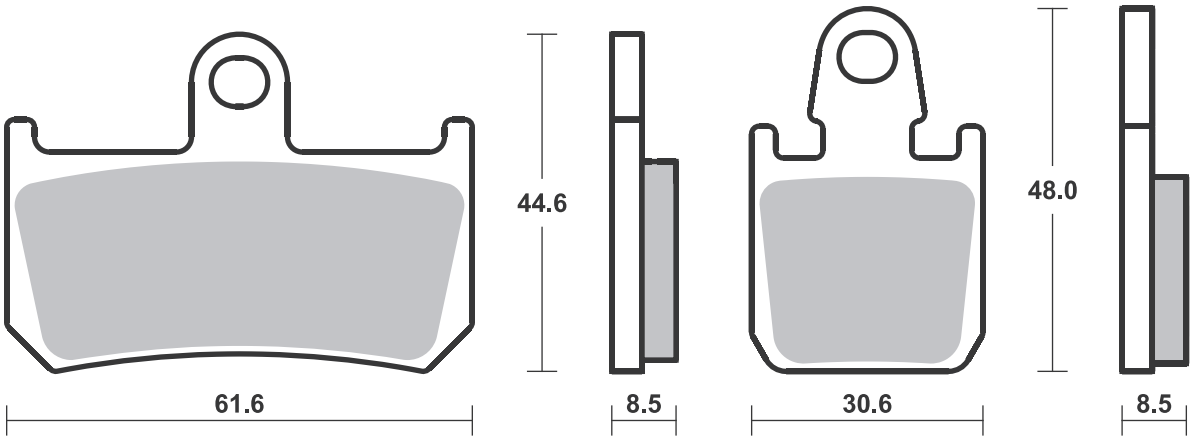

Available compounds **CS • SI • RSI** **SBS 840**

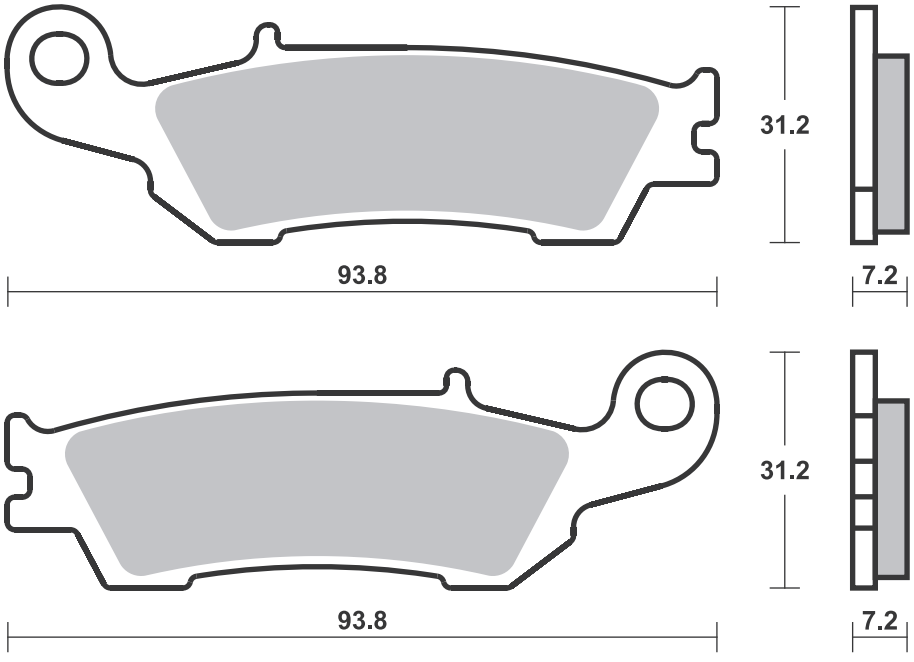

SBS 841 Recommended compound

APRILIA

RSV4	1000	, ABS	09-13	**SP**
RSV4-R	1000	, ABS APRC	10-10	**SP**
RSV4	1100	Factory	19-20	**SP**

BENELLI

TnT	1130	R	17-17	**HS**

BIMOTA

3D	800	Tesi	16-16	**HS**
	1200	Impeto	16-17	**HS**

BREMBO RACING CALIPERS

100 mm Radial Caliper .484,
220B47310, P4 32
100 mm Radial GP4 RX
220B01020 P4 32
(disc min. Th. 4,5 mm)
100 mm Radial Monoblock
220988530, P4 34
108 mm Radial Caliper .484,
220B47310, P4 32
108 mm Radial GP4 RX
220B01020 P4 32
(disc min. Th. 4,5 mm)
108 mm Radial Monoblock
220A39710, P4 34
130 mm Radial GP4 RX
220B01020 P4 32
(disc min. Th. 4,5 mm)
Radial GP4 RX 220B01010

DUCATI

	848	EVO	11-12	**HS**
	848	Streetfighter S	12-15	**HS**
D16RR	990	Desmosedici RR	07-08	**HS**
	998	Panigale V4 R	19-20	**SP**
	1098		07-08	**HS**
	1098	R	08-10	**SP**
	1098	R Bayliss LE	09-10	**SP**
	1098	S	07-08	**HS**
	1098	Streetfighter	09-14	**HS**
	1098	Streetfighter S	09-13	**HS**
	1100	Hypermotard	07-13	**HS**
	1100	Hypermotard EVO SP	10-12	**HS**
	1100	Panigale V4	18-20	**SP**
	1100	Panigale V4 S	18-20	**SP**
	1100	Panigale V4 S Corse	19-19	**SP**
	1100	Panigale V4 Speciale	18-19	**SP**
	1100	Streetfighter V4 S	20-21	**SP**
	1198		09-13	**SP**
	1198	S	09-12	**SP**
	1198	SP	11-12	**SP**
	1199	Panigale	12-14	**SP**
	1199	Panigale R	13-15	**SP**
	1199	Panigale S	12-14	**SP**
	1199	Superleggera	14-14	**SP**

DUCATI

	1200	Monster 25 Anniversario	19-19	**HS**
	1200	Monster R	16-19	**HS**
	1200	Monster S	14-21	**HS**
	1200	Multistrada S	15-17	**SP**
	1200	Multistrada S D-air	15-17	**SP**
	1200	Multistrada S Pikes Peak	16-17	**SP**
	1260	Multistrada	18-18	**SP**
	1260	Multistrada S	18-19	**SP**
	1260	Multistrada S D-air	18-19	**SP**
	1260	Multistrada S Grand Tour	20-20	**SP**
	1260	Multistrada S Pikes Peak	18-19	**SP**
	1299	Panigale	15-17	**SP**
	1299	Panigale R	15-17	**SP**
	1299	Panigale R Final Edition	17-20	**SP**
	1299	Panigale S	15-17	**SP**
	1299	Panigale S Anniversario	17-17	**SP**
	1299	Superleggera	17-17	**SP**

HUSQVARNA

FS	450		15-20	**RST**
	900	Nuda R, ABS	12-13	**HS**

KAWASAKI

ZX	1000	H2 Carbon Ninja	17-20	**SP**
ZX	1000	H2 Ninja	15-21	**SP**
ZX	1000	H2 SX SE+	19-21	**SP**
ZX	1000	H2R Ninja	15-20	**SP**
ZX-10R	1000	Ninja	16-20	**SP**
ZX-10R	1000	Ninja KRT	16-18	**SP**
ZX-10R	1000	Ninja SE	18-20	**SP**
ZX-10RR	1000	Ninja	17-20	**SP**
ZX-14R	1400	SE	16-18	**HS**

KTM

SX	450	SMR	13-15	**RST**
	690	Duke R	14-17	**HS**
	990	Supermoto R	10-10	**HS**
RC8	1190		08-11	**SP**
RC8	1190	R	09-15	**SP**
RC8	1190	R Track	11-15	**SP**
	1290	Super Duke R	14-20	**HS**
	1290	Superduke R Black	20-20	**SP**

MOTUS

MST-R	1650		14-17	**HS**

MV AGUSTA

	800	Superveloce	19-19	**SP**
	1000	Brutale RR	20-20	**SP**
	1000	F4 LH44	18-20	**SP**
	1000	F4 R	12-19	**SP**
	1000	F4 RC	15-20	**SP**
	1000	F4 RR	12-20	**SP**
	1000	Rush	20-20	**SP**

MV AGUSTA

	1078	Brutale RR	09-09	**HS**
	1078	F4 CC	08-11	**SP**
	1078	F4 RR	08-11	**SP**
	1090	Brutale Corse	14-16	**HS**
	1090	Brutale RR	10-17	**HS**

NORTON

	1200	V4 RR	18-19	**HS**

SUZUKI

GSX-R	600		11-21	**HS**
GSX-R	750		11-18	**HS**
GSX-R	1000		12-21	**SP**
GSX-R	1000	R	17-21	**SP**
GSX-S	1000		15-19	**HS**
GSX-S	1000	F	15-19	**HS**
GSX-S	1000	Katana	19-21	**HS**
GSX-R	1300	Hayabusa	13-21	**HS**

TRIUMPH

	2500	Rocket III GT	19-20	**SP**
	2500	Rocket III R	19-20	**SP**

Available compounds **HS • SP • DC • RST • DS-1 • DS-2** **SBS 841**

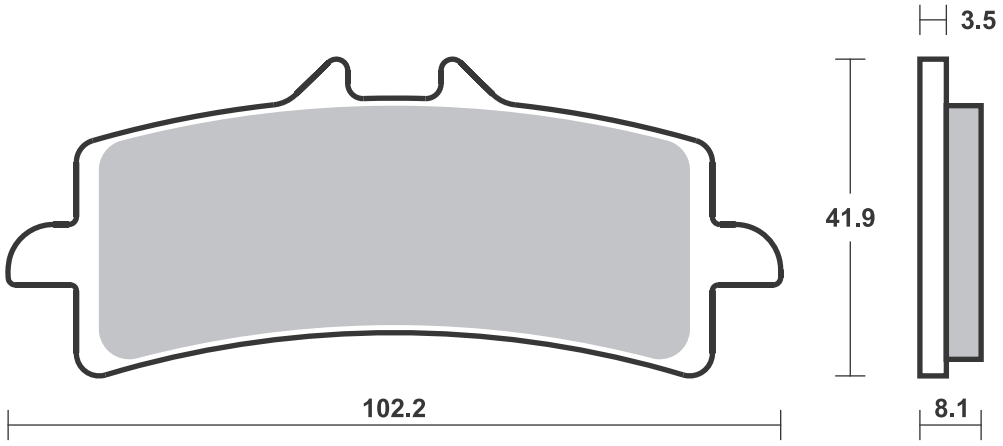

Dimensions in mm / Dimensions en mm • 1” = 25.4 mm , 1 mm = 0.04”

SBS 842 Recommended compound

APRILIA			
SXV	450	06-13	**RSI**
SXV	550	06-13	**RSI**
HUSABERG			
FS	450 c	06-08	**RSI**
FS	650 e, c	06-08	**RSI**
KTM			
SX	450 SMR	04-06	**RSI**
SX	525 SMR	04-07	**RSI**

SBS 843 Recommended compound

KTM			
SX	450 SMR	07-12	**RSI**
SX	560 SMR	06-07	**RSI**

Available compounds **HS • RST • RSI** **SBS 842**

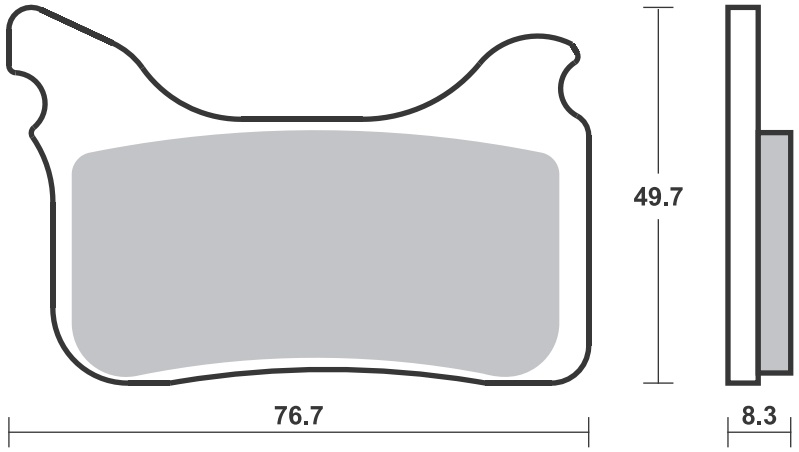

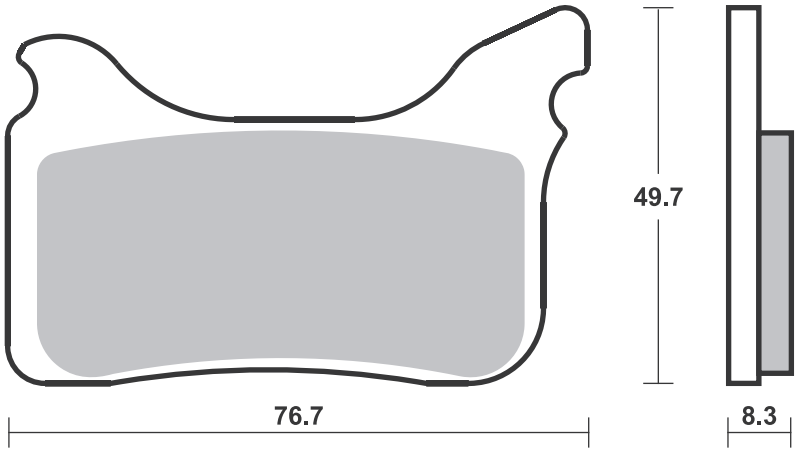

Available compounds **HS • DC • RST • RSI** **SBS 843**

1 set = 4 pcs.

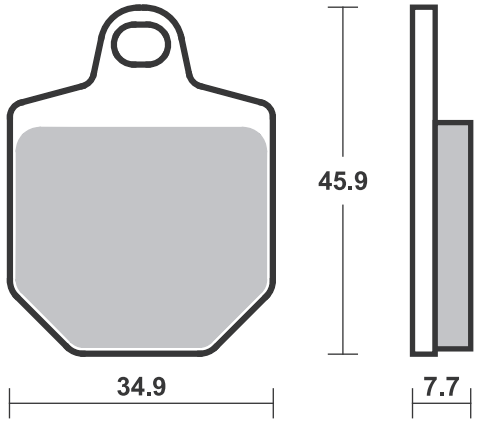

SBS 844 Recommended compound

APRILIA					
SL	750	Shiver GT, ABS	09-12	**HS**	
SL	750	Shiver, ABS	07-18	**HS**	
SMV	750	Dorsoduro	09-18	**HS**	
NA	850	Mana	07-07	**HS**	
NA	850	Mana GT, ABS	09-13	**HS**	
NA	850	Mana, ABS	08-11	**HS**	

SBS 845 Recommended compound

ACCOSSATO					
AGPZ05, 100 mm CNC Monoblock, 4 Piston/2 Pad					
AGPZ07, 100 mm Forged Monoblock, 4 Piston/2 Pad					
BMW					
	1000	HP4 Race	17-18	**DS-1**	
BREMBO RACING CALIPERS					
Radial Monoblock XA8Y310/11					

Available compounds **HF • HS • DC • RST** **SBS 844**

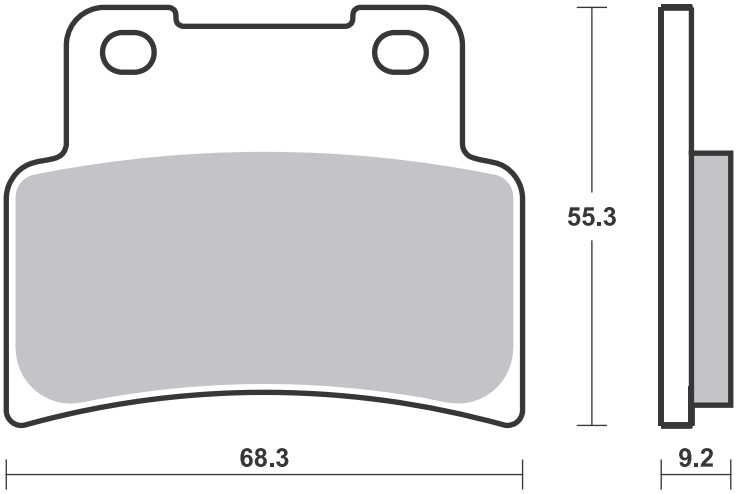

Available compounds **DC • DS-1 • DS-2** **SBS 845**

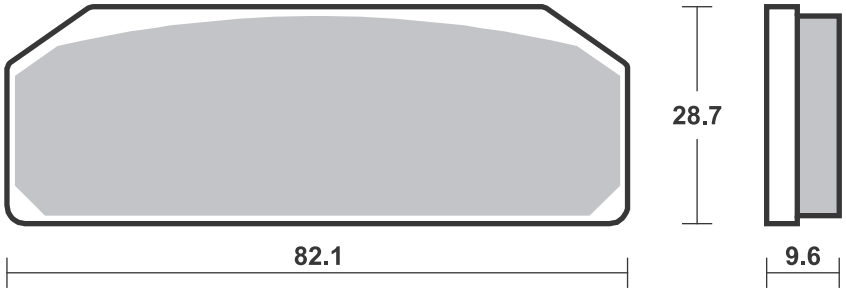

SBS 846 Recommended compound

HARLEY DAVIDSON				
FLSTI	1450	Heritage		
		Softail	06-06	**H.LS**
FXDI	1450	35th		
		Anniversary		
		Super Glide	06-06	**H.LS**
FXST/I	1450	Softail		
		Standard	06-06	**H.LS**
FXSTB/I	1450	Night Train	06-06	**H.LS**
FXSTD/I	1450	Softail		
		Deuce	06-06	**H.LS**
FXSTS/I	1450	Softail	06-06	**H.LS**
FLSTC	1584	Heritage		
		Softail		
		Classic	07-07	**H.LS**
FLSTF	1584	Fat Boy	07-07	**H.LS**
FLSTN	1584	Softail		
		Deluxe	07-07	**H.LS**
FLSTSC/I	1584	Softail	07-07	**H.LS**
FXST	1584	Softail		
		Standard	07-07	**H.LS**
FXSTB	1584	Night Train	07-07	**H.LS**
FXSTC	1584	Softail		
		Custom	07-07	**H.LS**
FXSTD	1584	Softail		
		Deuce	07-07	**H.LS**

SBS 847 Recommended compound

E-TON				
RXL	150	Viper	07-07	**SI**
VXL	250	Vector,		
		ST Vector	06-07	**SI**
VTX	300	Vortex,		
		ST Vortex	07-07	**SI**
VXL	300	Vector,		
		ST Vector	07-13	**SI**
SYM				
SB	125	Wolf Ni	11-13	**HF**
	200	Quadlander	12-13	**SI**
	200	Trackrunner	05-08	**SI**
	250	Quadlander	06-07	**SI**
	300	City Max	06-07	**SI**

Available compounds **H.HF • H.CT • H.LS** **SBS 846**

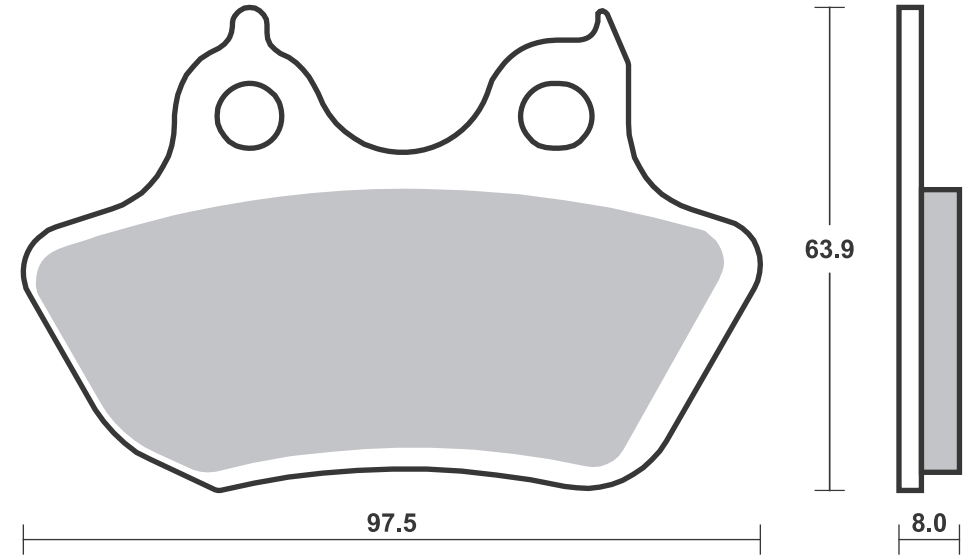

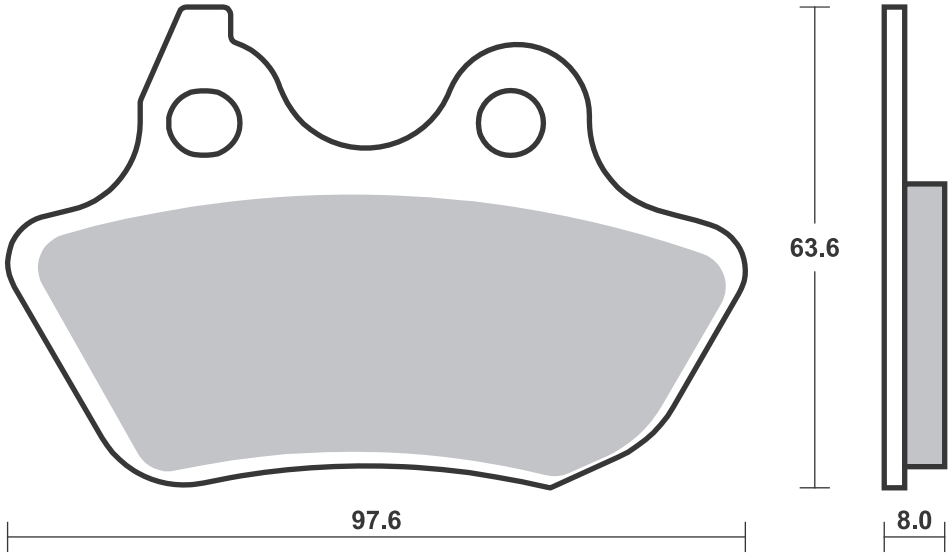

Available compounds **HF • HS • SI • RSI** **SBS 847**

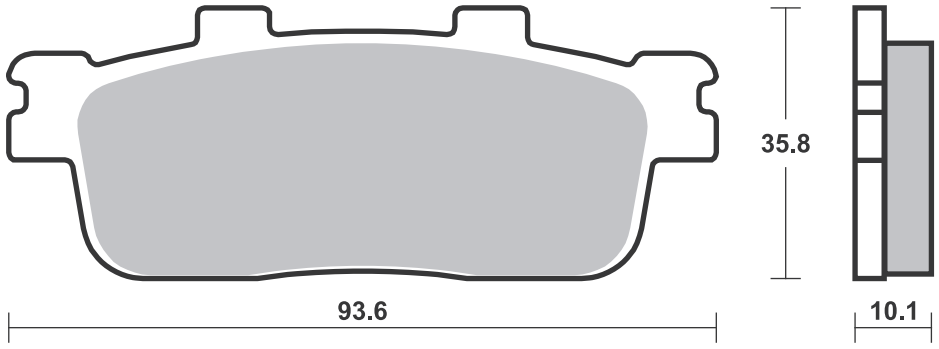

Dimensions in mm / Dimensions en mm • 1” = 25.4 mm , 1 mm = 0.04”

SBS 848 Recommended compound

ADLY			
ATV	300 Sport	07-13	**SI**
CPI			
XS	250 Quad	06-08	**SI**

SBS 849 Recommended compound

YAMAHA			
YFM	250 Raptor	09-14	**SI**
YFM	550 FGPW Grizzly	09-16	**SI**
YFM	700 FGPW Grizzly	07-17	**SI**

Available compounds **HF • SI** **SBS 848**

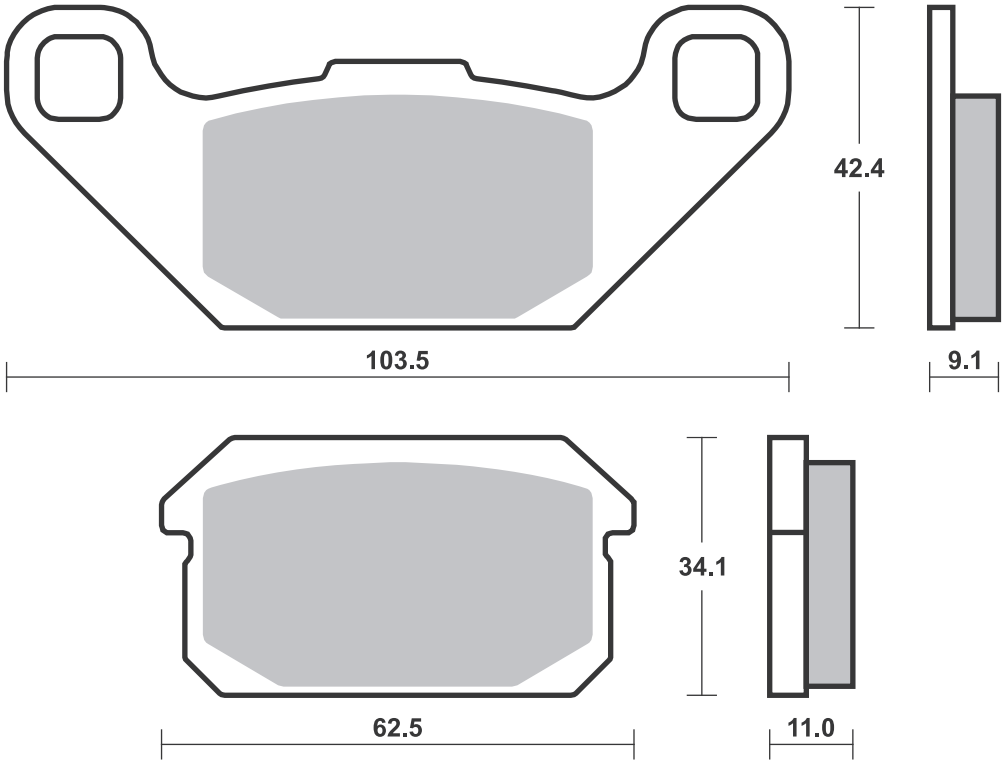

Available compounds **SI • RSI** **SBS 849**

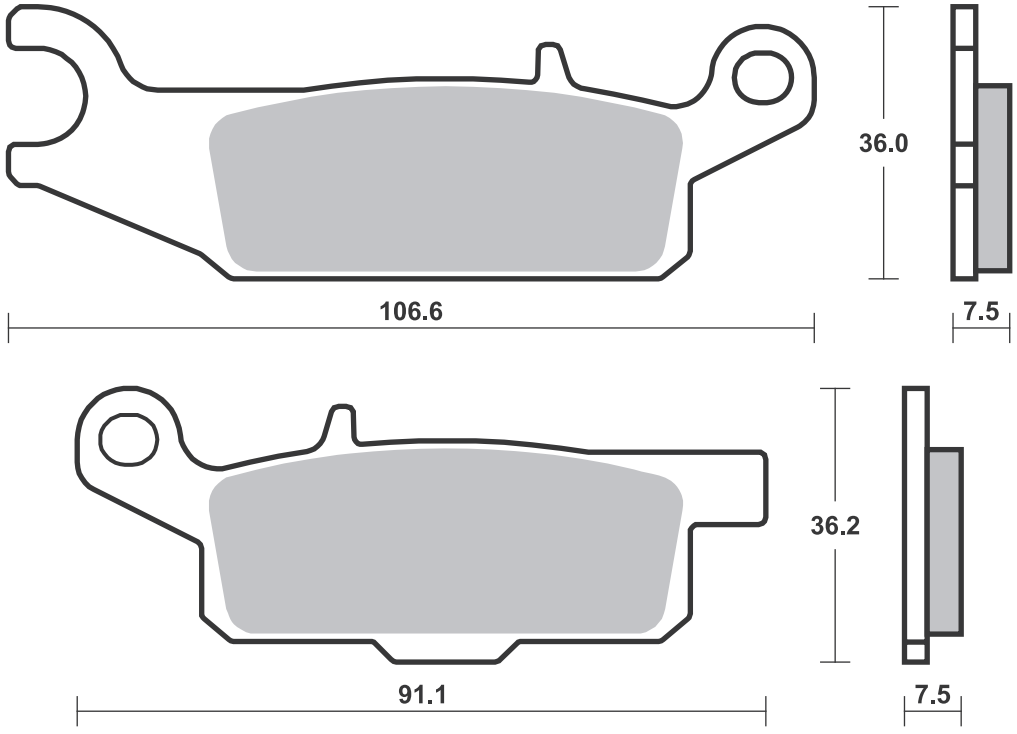

Dimensions in mm / Dimensions en mm • 1” = 25.4 mm , 1 mm = 0.04”

SBS 850 Recommended compound

YAMAHA					
YFM	250	Raptor	09-14	**SI**	
YFM	550	FGPW Grizzly	09-16	**SI**	
YFM	700	FGPW Grizzly	07-17	**SI**	

SBS 851 Recommended compound

YAMAHA					
YFM	550	FGPW Grizzly	09-16		**SI**
YFM	700	FGPW Grizzly	07-17		**SI**

Available compounds **SI • RSI** **SBS 850**

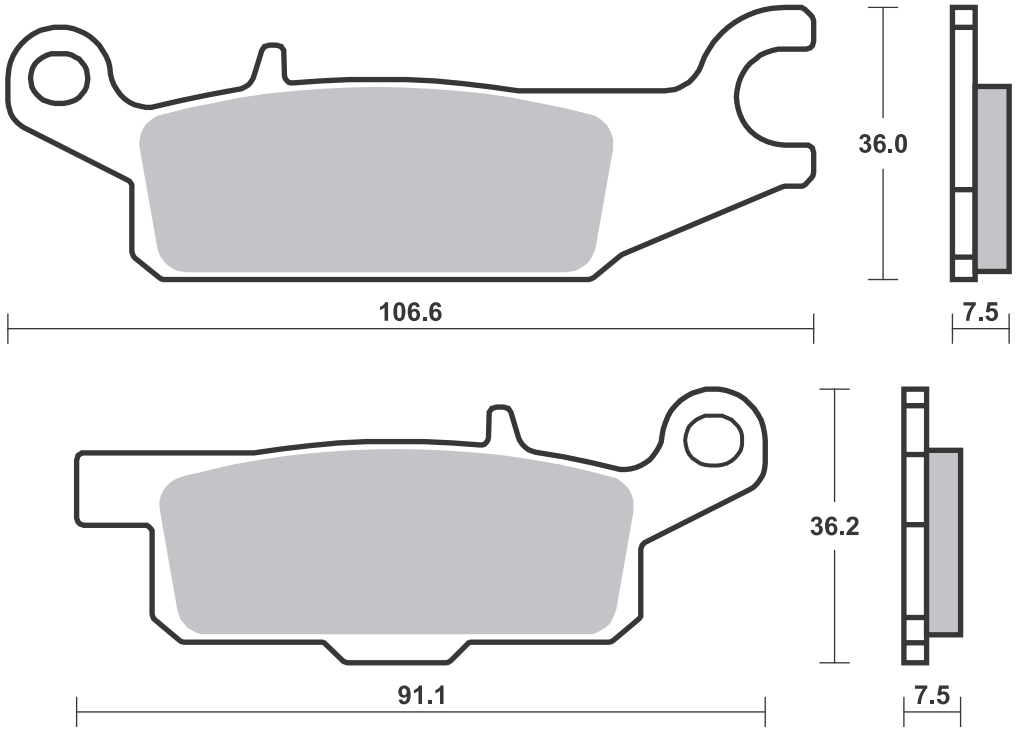

Available compounds **SI • RSI** **SBS 851**

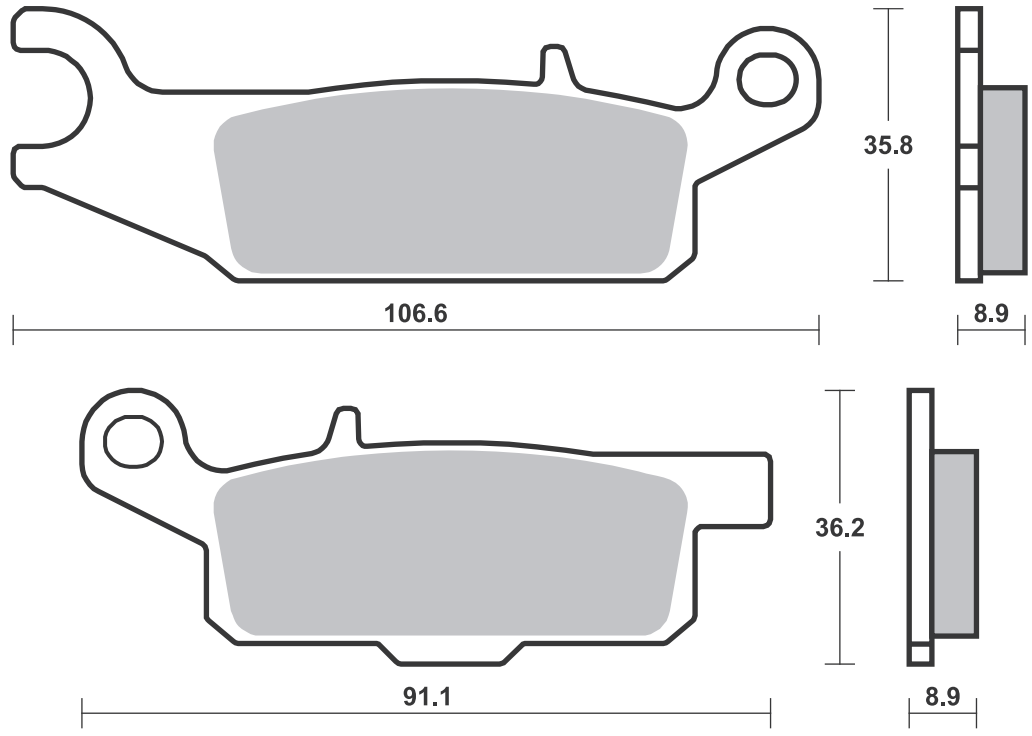

SBS 852 Recommended compound

YAMAHA				
YFM	550	FGPW Grizzly	09 - 16	**SI**
YFM	700	FGPW Grizzly	07 - 17	**SI**

Available compounds **SI • RSI** **SBS 852**

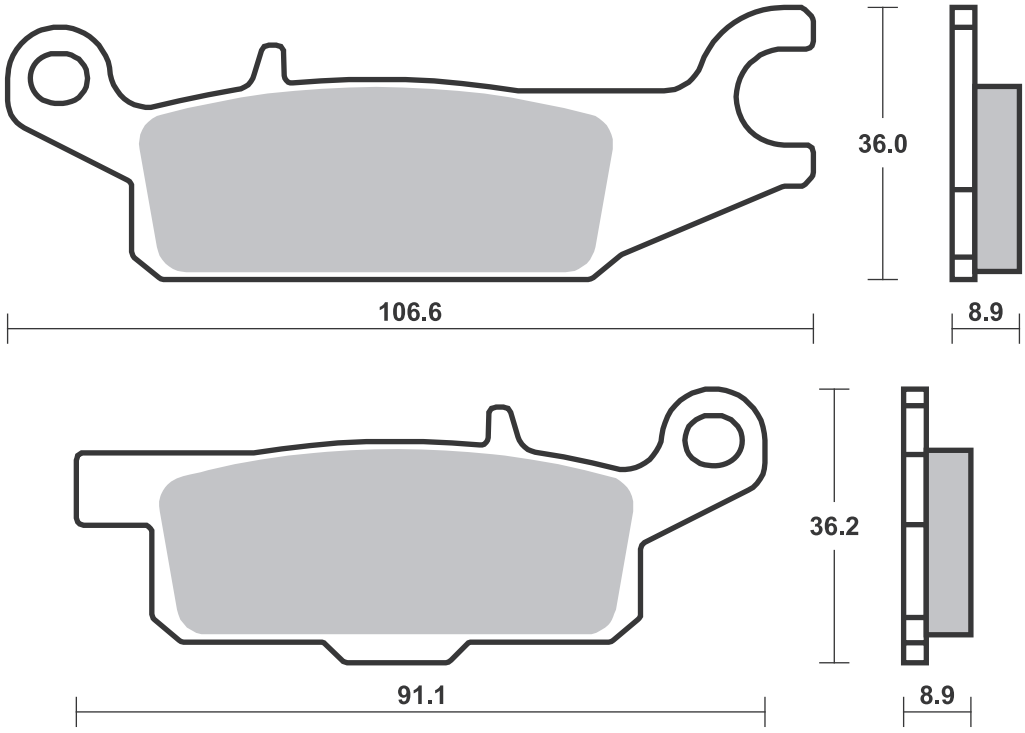

SBS 853 Recommended compound

HARLEY DAVIDSON					
FLSTC	1584	Heritage			
		Softail			
		Classic	08-11	**H.HS**	
FLSTF	1584	Fat Boy	08-11	**H.HS**	
FLSTFB	1584	Fat Boy			
		Special	10-11	**H.HS**	
FLSTN	1584	Softail			
		Deluxe	08-11	**H.HS**	
FXCW	1584	Rocker	08-09	**H.HS**	
FXCWC	1584	Rocker C	08-13	**H.HS**	
FXD	1584	Dyna Super			
		Glide	08-10	**H.HS**	
FXDB	1584	Dyna Street			
		Bob	08-13	**H.HS**	
FXDC	1584	Dyna Super			
		Glide			
		Custom	08-13	**H.HS**	
FXDF	1584	Fat Bob	08-11	**H.HS**	
FXDL	1584	Dyna Low			
		Rider	08-13	**H.HS**	
FXDWG	1584	Dyna Wide			
		Glide	08-10	**H.HS**	
FXST	1584	Softail			
		Standard	08-14	**H.HS**	
FXSTB	1584	Night Train	08-09	**H.HS**	
FXSTC	1584	Softail			
		Custom	08-10	**H.HS**	
FLD	1690	Switchback	12-16	**H.HS**	
FLHTC	1690	Electra			
		Glide			
		Classic	11-16	**H.HS**	
FLHTK	1690	Ultra			
		Electra			
		Glide	11-16	**H.HS**	
FLS	1690	Softail Slim	12-14	**H.HS**	
FLSTC	1690	Heritage			
		Softail			
		Classic	12-14	**H.HS**	
FLSTF	1690	Fat Boy	12-14	**H.HS**	
FLSTF	1690	Fat Boy			
		Special	12-14	**H.HS**	
FLSTFB	1690	Fat Boy	12-14	**H.HS**	
FLSTN	1690	Softail			
		Deluxe	12-14	**H.HS**	
FXDB	1690	Dyna Street			
		Bob	14-17	**H.HS**	
FXDBA	1690	Dyna Street			
		Bob	13-17	**H.HS**	
FXDBB	1690	Dyna Street			
		Bob	14-17	**H.HS**	
FXDBP	1690	Dyna Street			
		Bob	13-17	**H.HS**	
FXDC	1690	Dyna Super			
		Glide			
		Custom	14-14	**H.HS**	
FXDF	1690	Dyna Wide			
		Glide	12-17	**H.HS**	
FXDF	1690	Fat Bob	12-17	**H.HS**	
FXDL	1690	Dyna Low			
		Rider	14-17	**H.HS**	
FXDLS	1690	Dyna Low			
		Rider S	17-17	**H.HS**	
FXS	1690	Blackline	13-17	**H.HS**	
FXSB	1690	Breakout	14-14	**H.HS**	
FLSTNSE	1802	CVO			
		Softail			
		Deluxe	14-14	**H.HS**	

HARLEY DAVIDSON					
FXSBSE	1802	CVO			
		Breakout	13-14	**H.HS**	

Available compounds **H.HF • H.CT • H.HS** **SBS 853**

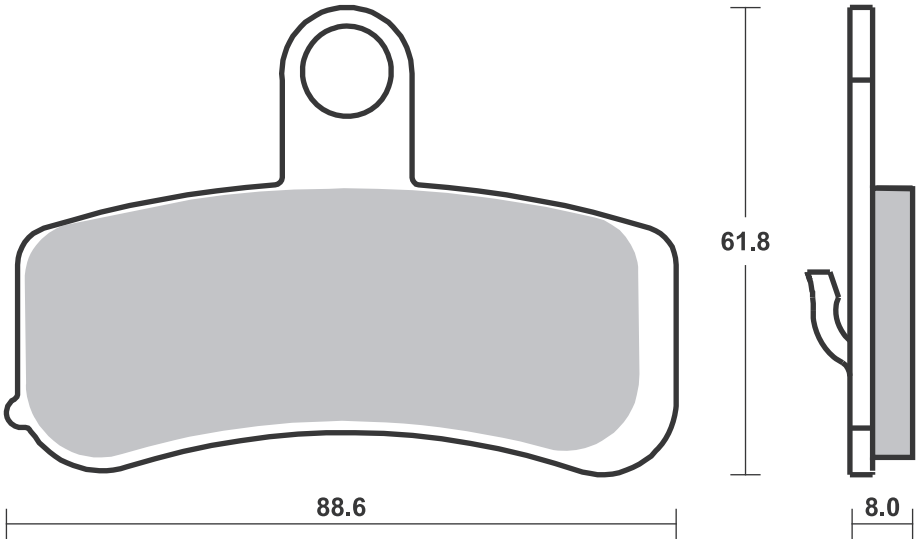

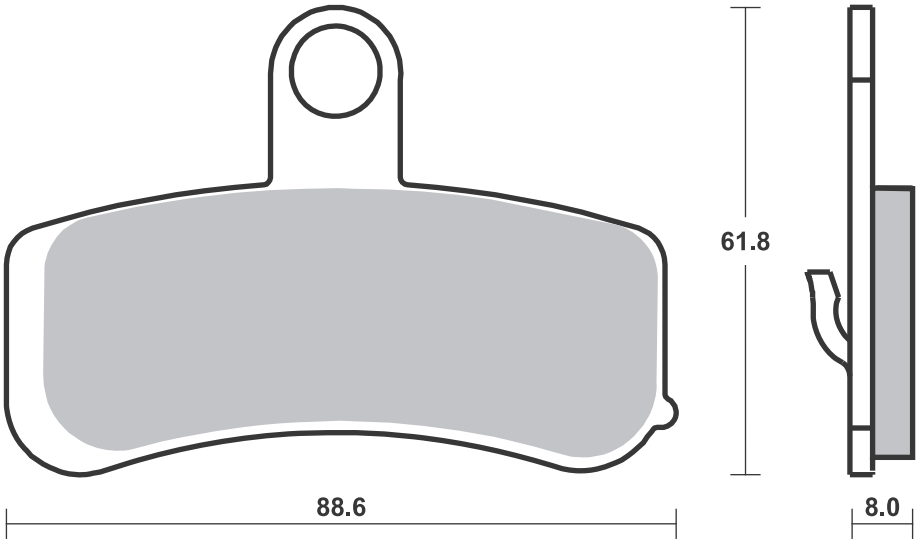

SBS 854 Recommended compound

HARLEY DAVIDSON				
FLSTC	1584	Heritage Softail Classic	08-11	**H.LS**
FLSTF	1584	Fat Boy	08-11	**H.LS**
FLSTFB	1584	Fat Boy Special	10-11	**H.LS**
FLSTN	1584	Softail Deluxe	08-11	**H.LS**
FXCW	1584	Rocker	08-09	**H.LS**
FXCWC	1584	Rocker C	08-13	**H.LS**
FXD	1584	Dyna Super Glide	08-10	**H.LS**
FXDB	1584	Dyna Street Bob	08-13	**H.LS**
FXDC	1584	Dyna Super Glide Custom	08-13	**H.LS**
FXDF	1584	Fat Bob	08-11	**H.LS**
FXDL	1584	Dyna Low Rider	08-13	**H.LS**
FXDWG	1584	Dyna Wide Glide	08-10	**H.LS**
FXST	1584	Softail Standard	08-17	**H.LS**
FXSTB	1584	Night Train	08-09	**H.LS**
FXSTC	1584	Softail Custom	08-10	**H.LS**
FLD	1690	Switchback	12-16	**H.LS**
FLHTC	1690	Electra Glide Classic	11-16	**H.LS**
FLHTK	1690	Ultra Electra Glide	11-16	**H.LS**
FLS	1690	Softail Slim	12-17	**H.LS**

HARLEY DAVIDSON				
FLSTC	1690	Heritage Softail Classic	12-17	**H.LS**
FLSTF	1690	Fat Boy	12-17	**H.LS**
FLSTF	1690	Fat Boy Special	12-14	**H.LS**
FLSTFB	1690	Fat Boy	12-17	**H.LS**
FLSTN	1690	Softail Deluxe	12-17	**H.LS**
FXDB	1690	Dyna Street Bob	14-17	**H.LS**
FXDBA	1690	Dyna Street Bob	13-17	**H.LS**
FXDBB	1690	Dyna Street Bob	14-17	**H.LS**
FXDBP	1690	Dyna Street Bob	13-17	**H.LS**
FXDC	1690	Dyna Super Glide Custom	14-14	**H.LS**
FXDF	1690	Dyna Wide Glide	12-17	**H.LS**
FXDF	1690	Fat Bob	12-17	**H.LS**
FXDL	1690	Dyna Low Rider	14-17	**H.LS**
FXDLS	1690	Dyna Low Rider S	17-17	**H.LS**
FXS	1690	Blackline	13-17	**H.LS**
FXSB	1690	Breakout	14-17	**H.LS**
FLSS	1802	Softail Slim S	16-17	**H.LS**
FLSTFBS	1802	Fat Boy S	16-17	**H.LS**
FLSTNSE	1802	CVO Softail Deluxe	14-17	**H.LS**

HARLEY DAVIDSON				
FXSBSE	1802	CVO Breakout	13-14	**H.LS**

SBS 856 Recommended compound

BUELL				
	1125	CR	09-10	**HS**
	1125	R	08-10	**HS**
XB12R	1200	Firebolt	09-10	**HS**
XB12Scg	1200	Lightning	09-10	**HS**
XB12Ss	1200	Lightning Long	09-10	**HS**
EBR				
	1190	RS	12-15	**HS**
	1190	RX	14-15	**HS**
	1190	SX	14-15	**HS**

Available compounds **H.HF • H.CT • H.LS** **SBS 854**

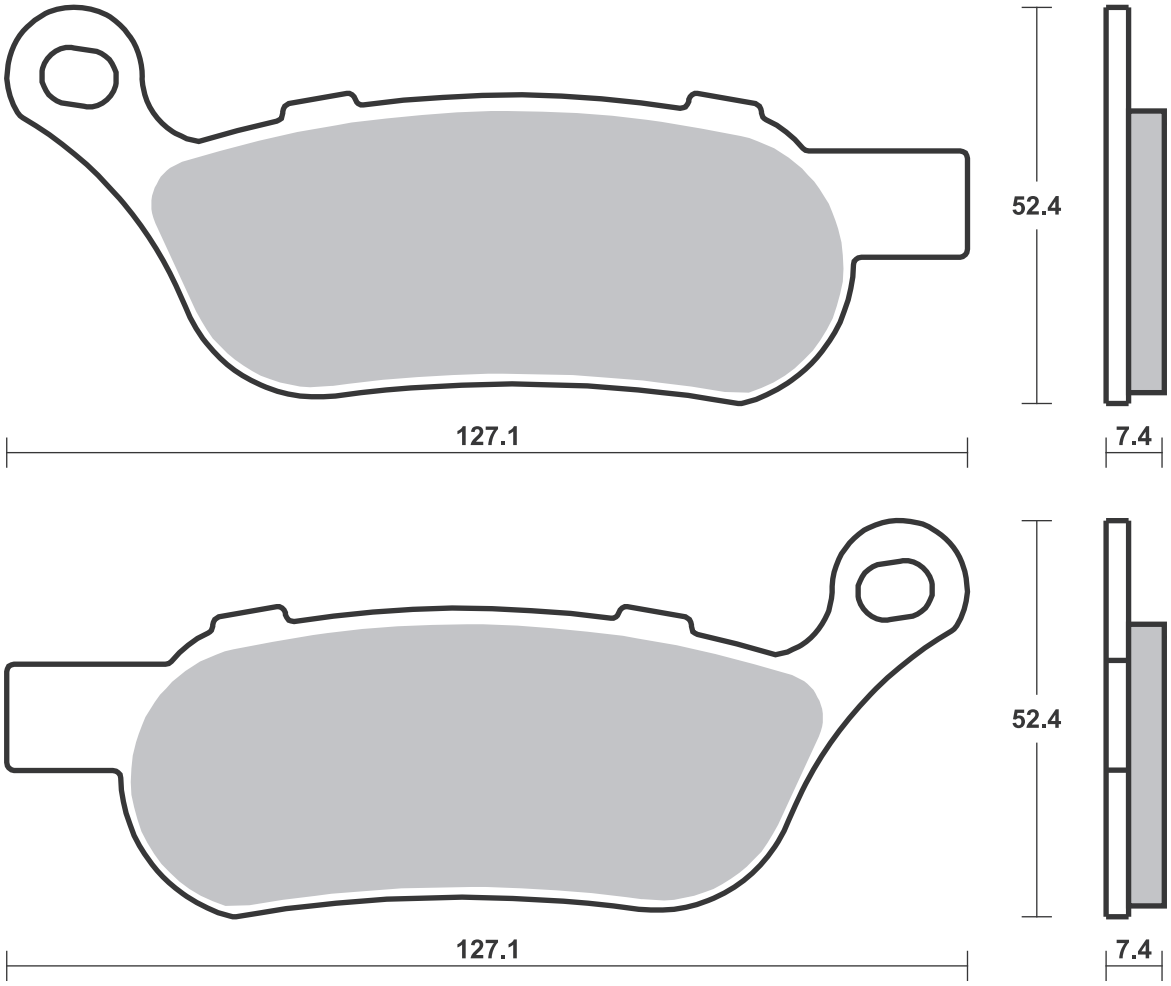

Available compounds **HS • RST • DS-1** **SBS 856**

1 set = 4 pcs.

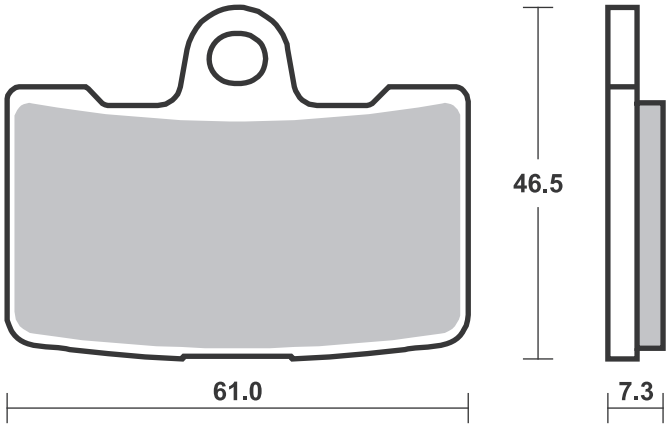

SBS 857 Recommended compound

BUELL			
	1125 CR	09-10	**LS**
	1125 R	08-10	**LS**
EBR			
	1190 RS	12-15	**LS**
	1190 RX	14-15	**LS**
	1190 SX	14-15	**LS**

SBS 858 Recommended compound

YAMAHA			
	115 D'elight	14-18	**HF**
XC	125 Vity	08-13	**HF**
YBR	125	08-16	**HF**
	135 Crypton X	08-14	**HF**

Available compounds **LS** **SBS 857**

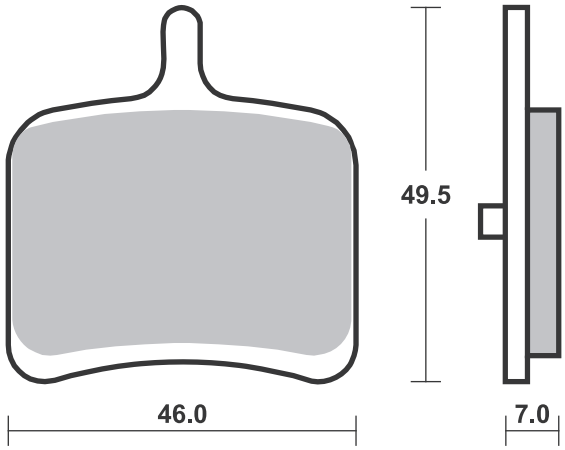

Available compounds **HF** **SBS 858**

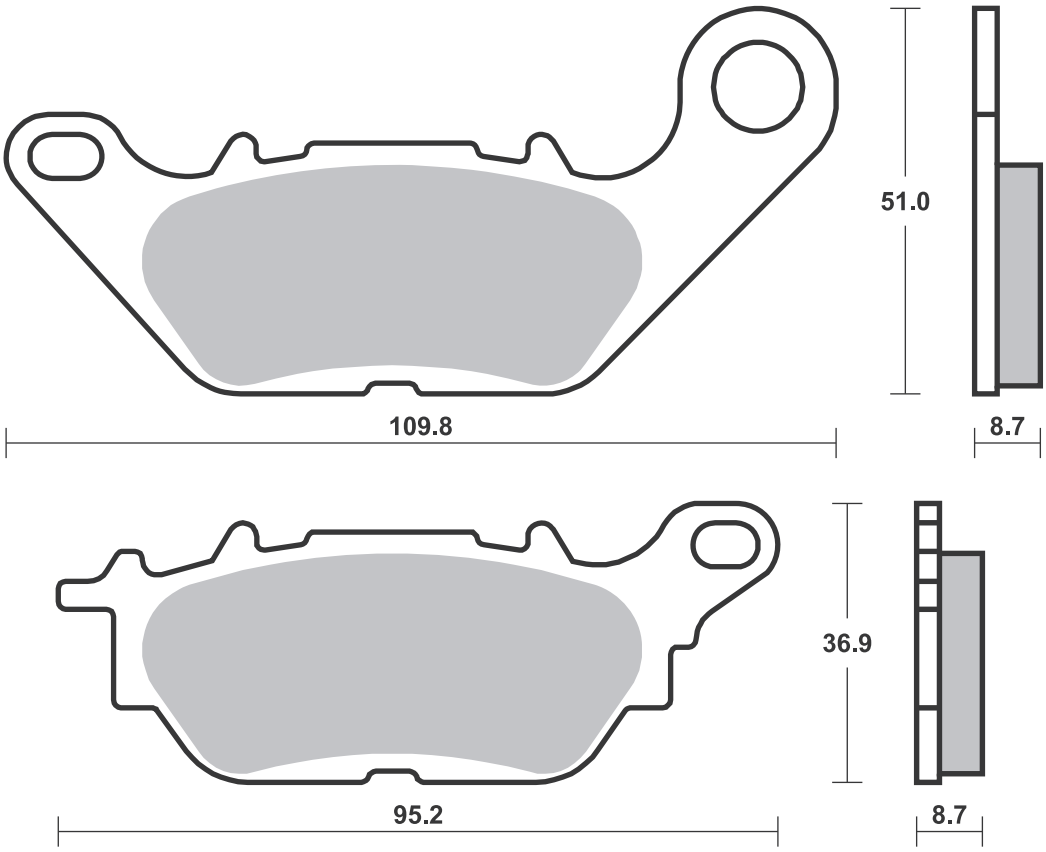

Dimensions in mm / Dimensions en mm • 1” = 25.4 mm , 1 mm = 0.04”

SBS 859 Recommended compound

DERBI					
	125	Mulhacen	08-11	**HF**	
	125	Terra	08-13	**HF**	
	125	Terra Adventure	08-14	**HF**	
HONDA					
CRE	125	RR	11-11	**SI**	
CRF	250	L	13-15	**SI**	
CRF	250	L ABS	17-21	**SI**	
CRF	250	M	14-18	**SI**	
CRF	250	Rally	17-19	**SI**	
SCORPA					
	250	T-Ride	08-11	**HF**	

SBS 860 Recommended compound

HARLEY DAVIDSON					
XR	1200		08-10	**H.HS**	
XR	1200	X	10-13	**H.HS**	
FXST	1584	Softail Standard	15-17	**H.HS**	
FLS	1690	Softail Slim	15-17	**H.HS**	
FLSTC	1690	Heritage Softail Classic	15-17	**H.HS**	
FLSTF	1690	Fat Boy	15-17	**H.HS**	
FLSTFB	1690	Fat Boy	15-17	**H.HS**	
FLSTN	1690	Softail Deluxe	15-17	**H.HS**	
FXSB	1690	Breakout	15-17	**H.HS**	
FLDE	1750	Softail Deluxe	18-19	**H.HS**	
FLFB	1750	Fat Boy	18-20	**H.HS**	
FLHC	1750	Heritage Classic	18-19	**H.HS**	
FLSB	1750	Sport Glide	18-20	**H.HS**	
FLSL	1750	Softail Slim	18-20	**H.HS**	
FXBB	1750	Street Bob	18-20	**H.HS**	
FXBR	1750	Breakout	18-19	**H.HS**	
FXFB	1750	Fat Bob	18-20	**H.HS**	
FXLR	1750	Low Rider	18-20	**H.HS**	
FLSS	1802	Softail Slim S	16-17	**H.HS**	
FLSTFBS	1802	Fat Boy S	16-17	**H.HS**	
FLSTNSE	1802	CVO Softail Deluxe	15-17	**H.HS**	

HARLEY DAVIDSON					
FLFBS	1870	Fat Boy	18-19	**H.HS**	
FLHCS	1870	Heritage Classic	18-19	**H.HS**	
FXBRS	1870	Breakout	18-20	**H.HS**	
FXDR	1870		19-20	**H.HS**	

Available compounds **HF • SI • RSI** **SBS 859**

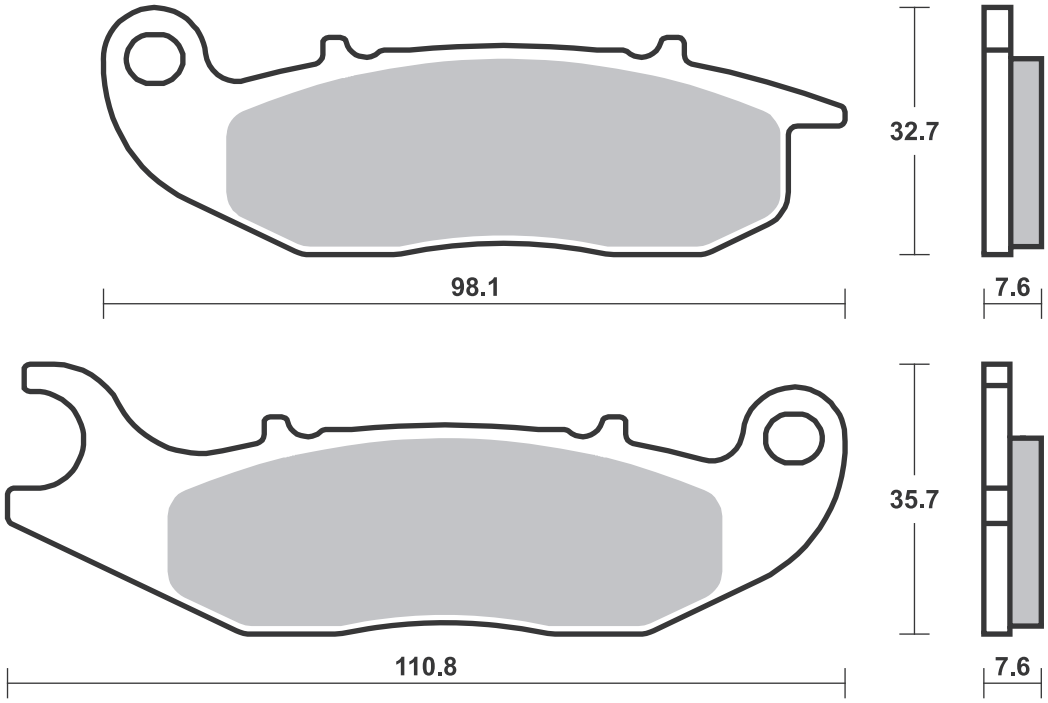

Available compounds **SP • DS-1 • H.HF • H.CT • H.HS** **SBS 860**

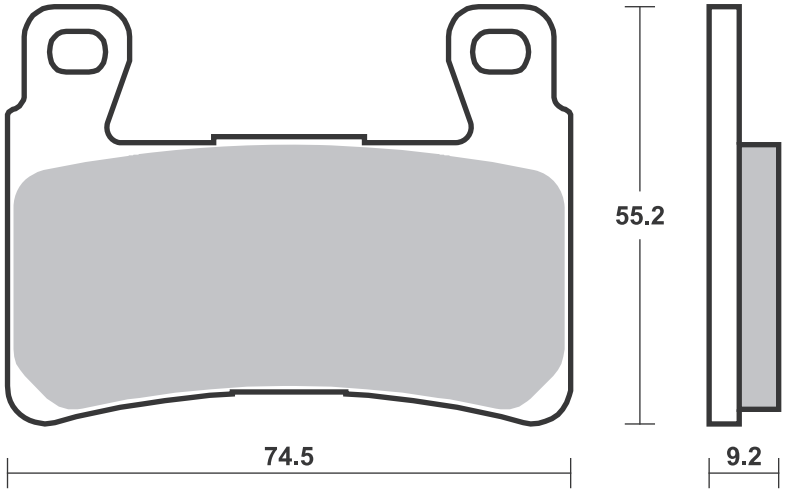

SBS 861 Recommended compound

BETA				
ALP	125	4-stroke	06-09	**HF**
ALP	200	4-stroke	06-20	**HF**
ALP	350	4.0	06-18	**HF**

SBS 862 Recommended compound

HONDA				
VFR	800	Crossrunner	11-13	**LS**
VFR	800	F	14-19	**LS**
VFR	800	X Crossrunner	15-18	**LS**
CB	1000	R	08-16	**LS**
CB	1000	R	18-21	**LS**
CB	1000	R ABS	08-16	**LS**
CB	1000	R+ Neo		
		Sports Cafe	18-18	**LS**
VFR	1200	F	10-19	**LS**

Available compounds **HF** **SBS 861**

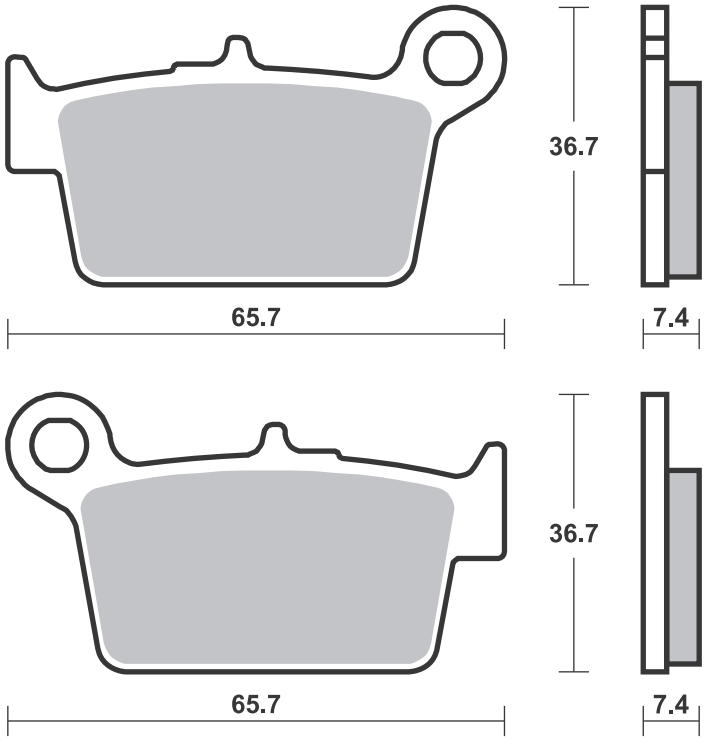

Available compounds **HF • LS** **SBS 862**

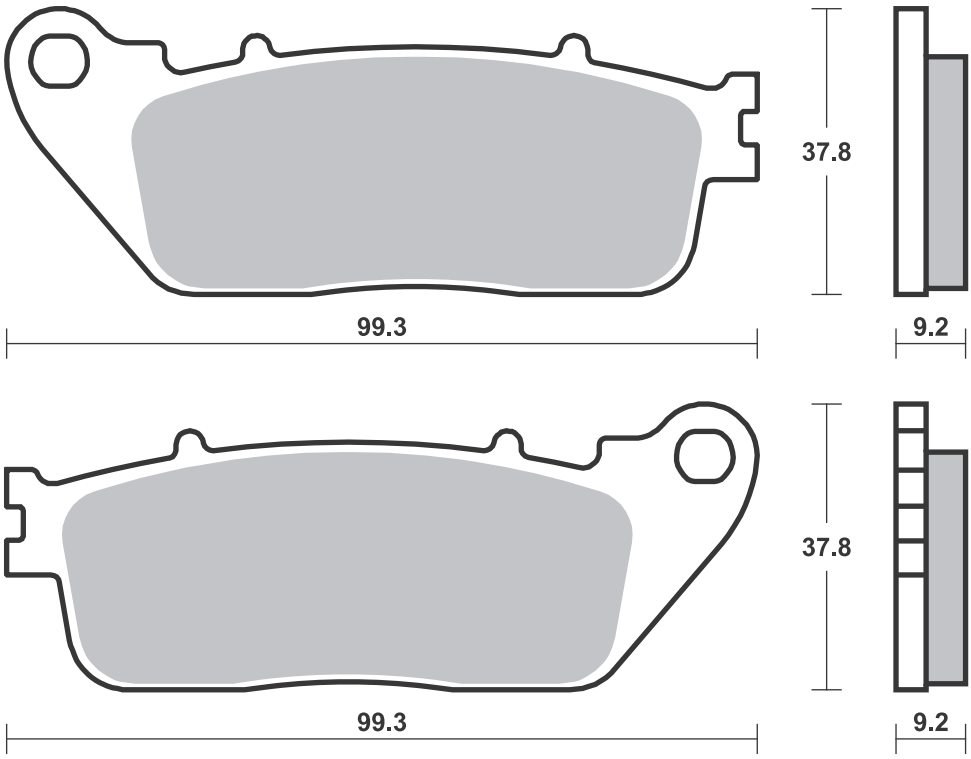

Dimensions in mm / Dimensions en mm • 1” = 25.4 mm , 1 mm = 0.04”

SBS 864 Recommended compound

TRIUMPH			
675	Daytona Triple	09-18	**HS**

SBS 865 Recommended compound

NISSIN
6 Piston Racing Radial
Monobloc Caliper (Z0901)

SBS 866 Recommended compound

KTM			
SX	450 ATV	08-10	**RSI**
XC	450 ATV	08-10	**SI**
SX	505 ATV	08-12	**RSI**
XC	505 ATV	08-12	**SI**

Available compounds **HS • SP • DC • RST** **SBS 864**

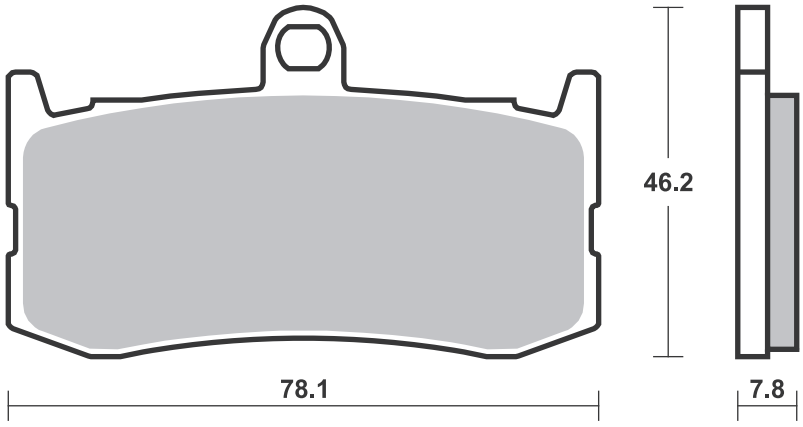

Available compounds **DS-1** **SBS 865**

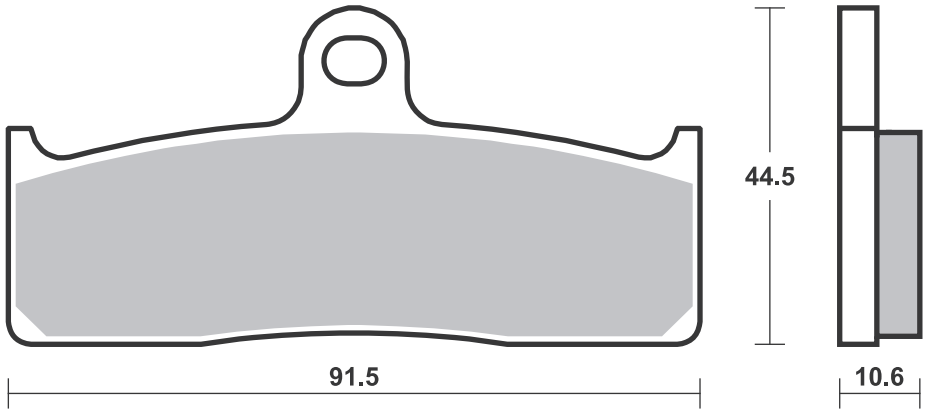

Available compounds **SI • RSI** **SBS 866**

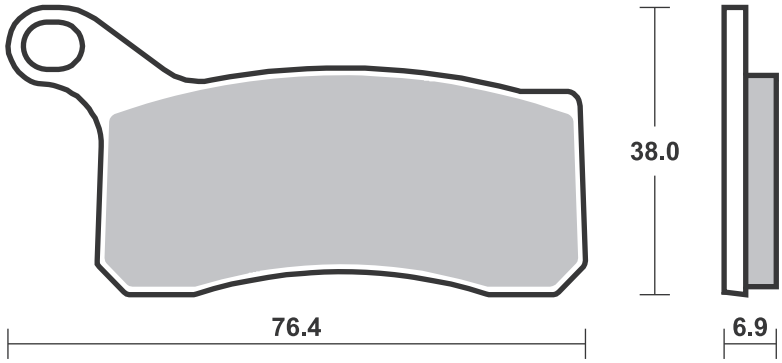

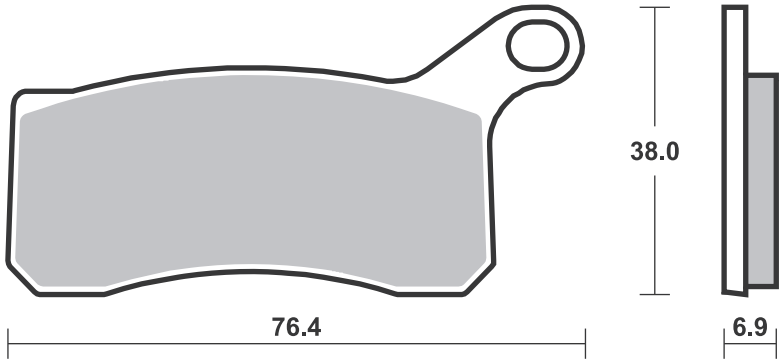

Dimensions in mm / Dimensions en mm • 1” = 25.4 mm , 1 mm = 0.04”

SBS 867 Recommended compound

KTM			
SX	450 ATV	08-10	**RSI**
XC	450 ATV	08-10	**SI**
SX	505 ATV	08-12	**RSI**
XC	505 ATV	08-12	**SI**

SBS 869 Recommended compound

HONDA			
VFR	1200 F	10-19	**HS**
VFR	1200 F w/DCT	10-19	**HS**

Available compounds **SI • RSI** **SBS 867**

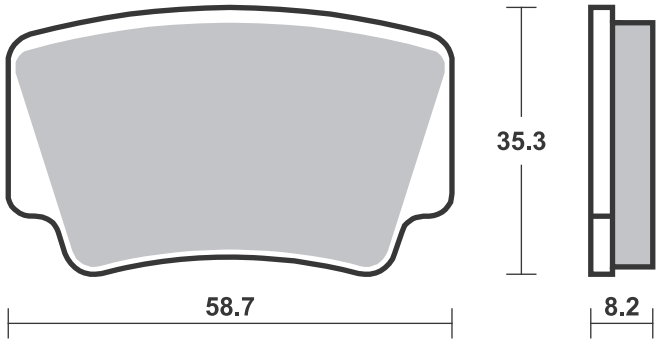

Available compounds **HS • SP** **SBS 869**

1 set = 2 pcs. large / small

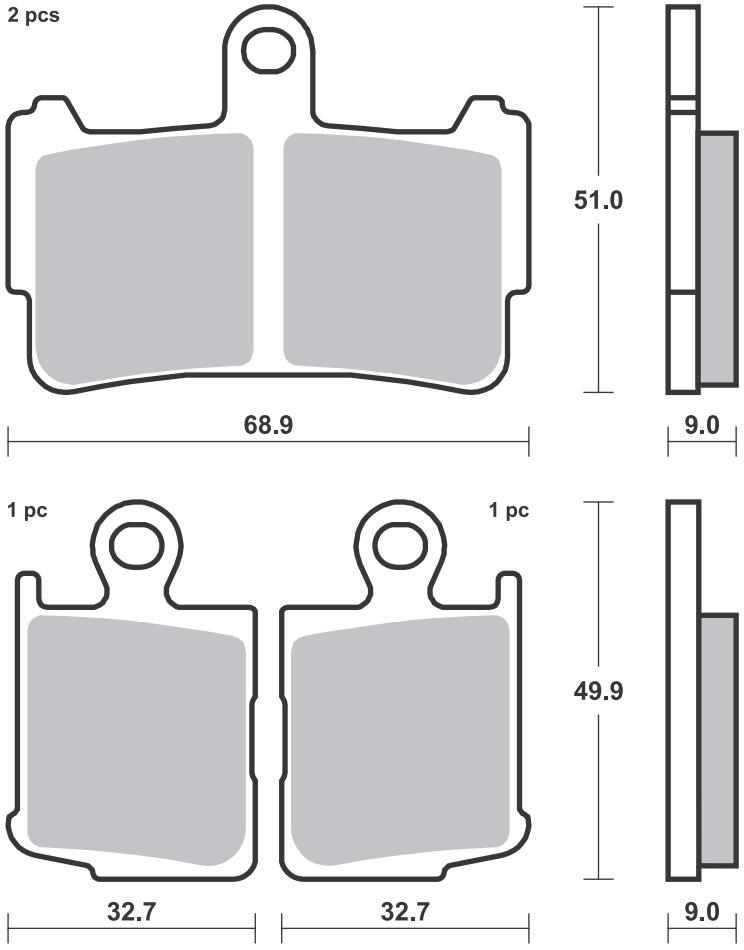

SBS 870 Recommended compound

BMW				
S	1000 R		13-19	**HS**
S	1000 RR		09-18	**SP**

SBS 872 Recommended compound

HUSQVARNA				
CR	65		12-13	**RSI**
TC	85		14-20	**RSI**
KTM				
		Freeride		
		Electric	12-14	**RSI**
E-SM		Freeride	15-16	**RSI**
E-SX		Freeride	15-16	**RSI**
E-XC		Freeride	15-18	**RSI**
SX	85		11-20	**RSI**
SX	85	(19"/		
		16" wheels)	13-20	**RSI**
	250	Freeride R	14-19	**RSI**
	350	Freeride	12-17	**RSI**
OHVALE				
GP-01	110		17-19	**RQ**
GP-01	160		17-19	**RQ**
GP-01	190		17-19	**RQ**
GP-01	212		17-19 **RST**	**RQ**

Available compounds **HS • SP • DC • RST • DS-1 • DS-2** **SBS 870**

1 set = 4 pcs.

HS / SP - Th. 8.0
RST / DC / DS - Th. 8.7

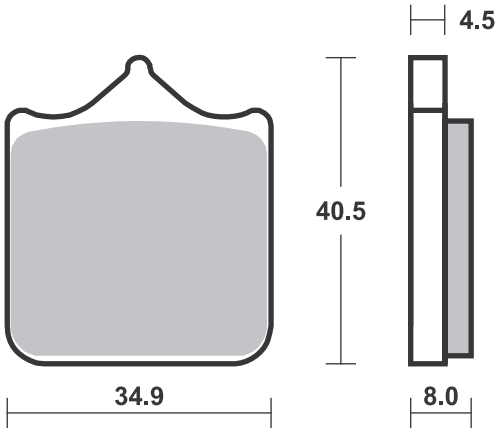

Available compounds **RST • RQ • CS • SI • RSI** **SBS 872**

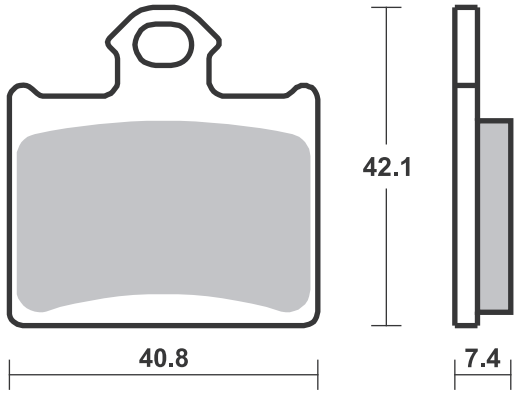

SBS 873 Recommended compound

SWM				
	125	Ace of Spades	20-20	**HF**
	125	Gran Milano Outlaw	20-20	**HF**
	125	Outlaw	20-20	**HF**
	125	Varez	20-20	**HF**
RS	125	R	20-20	**HF**
SM	125	R	20-20	**HF**

SBS 877 Recommended compound

BMW				
G	310	GS	17-21	**HS**
G	310	R	16-21	**HS**
FANTIC				
	125	Caballero Flat Track	17-17	**HS**
HUSQVARNA				
	401	Svartpilen	17-20	**HS**
	401	Vitpilen	17-20	**HS**
KTM				
	125	Duke	11-19	**HS**
RC	125		14-19	**HS**
	200	Duke	12-17	**HS**
RC	200		14-19	**HS**
	250	Duke	14-15	**HS**
RC	250		14-15	**HS**
	390	Adventure	20-20	**HS**
	390	Duke	13-20	**HS**
RC	390		14-20	**HS**

Available compounds **HF** **SBS 873**

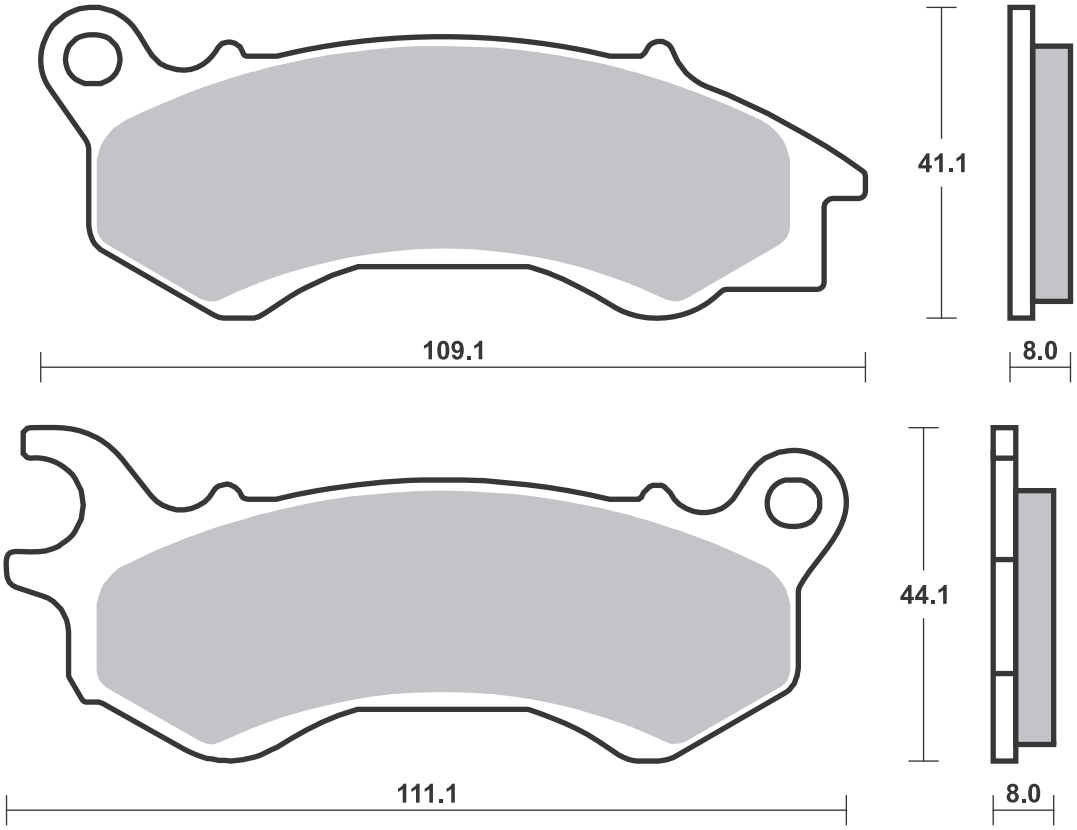

Available compounds **HF • HS • DC • RST** **SBS 877**

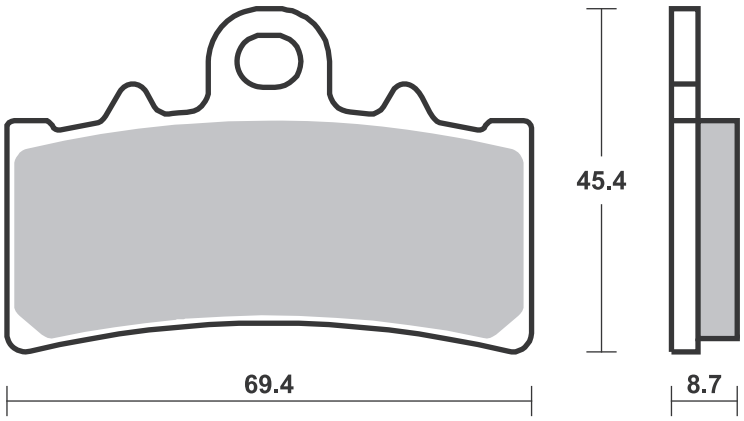

SBS 878 Recommended compound

CECTEK					
	500	EFI King Cobra	09-13	**HF**	
	500	EFI Quadrift	09-11	**HF**	
	500	i Estoc	10-10	**HF**	

SBS 879 Recommended compound

APRILIA					
NA	850	Mana GT, ABS			
		(Parking Brake)	09-13	**HF**	
HONDA					
CTX	700	D ABS			
		w/DCT			
		(Parking Brake)	13-15	**HF**	
CTX	700	ND ABS			
		w/DCT			
		(Parking Brake)	14-15	**HF**	
NC	700	D Integra			
		w/DCT			
		(Parking Brake)	12-13	**HF**	
NC	700	SD ABS			
		w/DCT			
		(Parking Brake)	12-13	**HF**	
NC	700	XD ABS			
		w/DCT			
		(Parking Brake)	12-13	**HF**	
NM4	700	Vultus ABS			
		w/DCT			
		(Parking Brake)	15-15	**HF**	
	750	X-ADV			
		(Parking Brake)	17-19	**HF**	
NC	750	D Integra			
		w/DCT			
		(Parking Brake)	14-19	**HF**	
NC	750	S w/DCT			
		(Parking Brake)	14-19	**HF**	

HONDA					
NC	750	X w/DCT			
		(Parking Brake)	14-19	**HF**	
CRF	1000	L Africa Twin			
		(Parking Brake)	16-19	**HF**	
CRF	1000	L Africa Twin			
		Adventure			
		Sports			
		(Parking Brake)	18-19	**HF**	
VFR	1200	F w/DCT			
		(Parking Brake)	10-19	**HF**	
VFR	1200	XDC			
		Crosstourer			
		w/DCT			
		(Parking Brake)	12-19	**HF**	
GL	1800	Gold Wing			
		(Parking Brake)	18-20	**HF**	

Available compounds **HF • SI • RSI** **SBS 878**

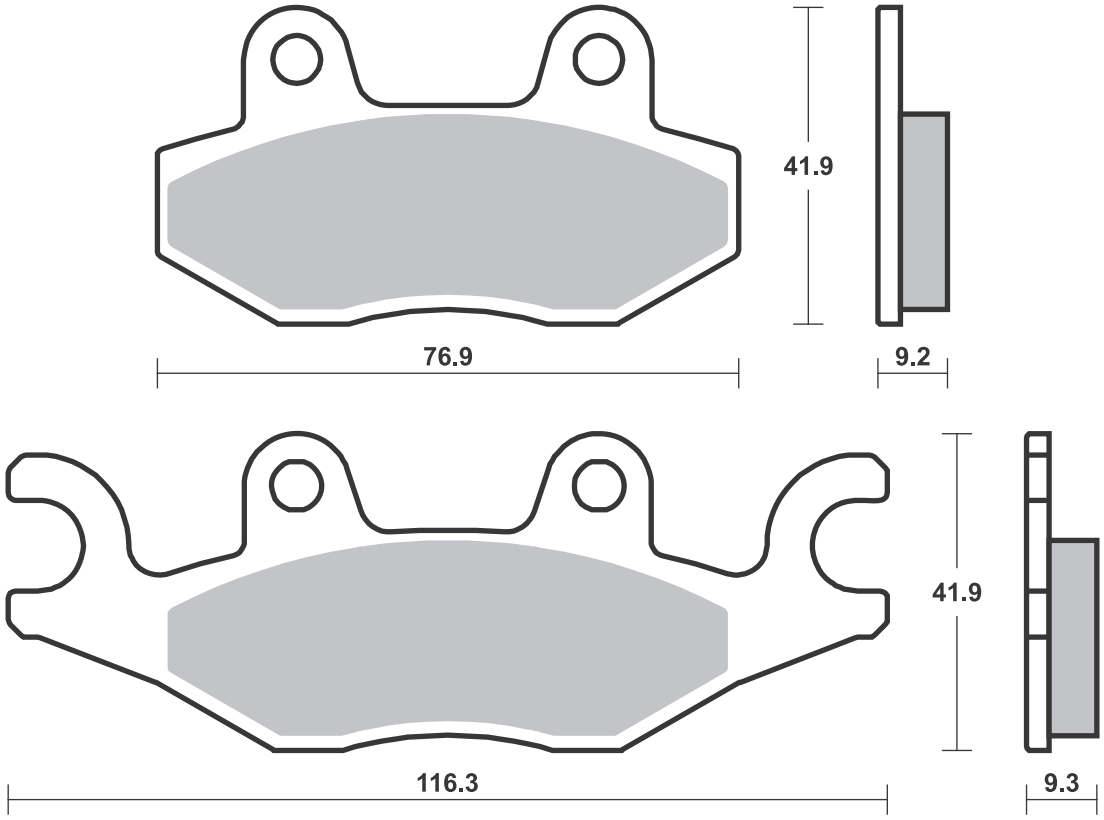

Available compounds **HF** **SBS 879**

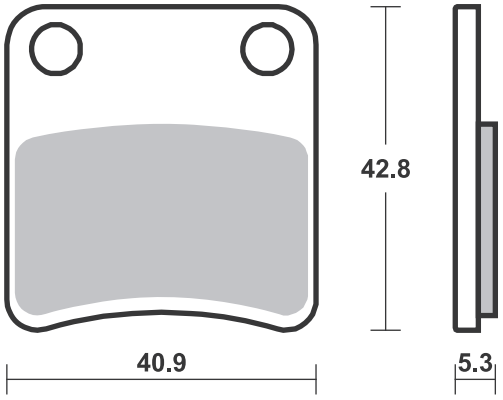

SBS 880 Recommended compound

HONDA				
GL	1800	C Valkyrie	14-15	**LS**
GL	1800	Gold Wing	01-17	**LS**
GL	1800	Gold Wing F6B	13-16	**LS**

SBS 881 Recommended compound

HONDA				
CBR	250	R (Nissin cal)	11-13	**LS**
CBR	250	R ABS (Nissin cal)	11-13	**LS**
CBR	250	RR	17-21	**LS**
CBR	300	F	14-16	**LS**
CBR	300	F ABS	14-17	**LS**
CBR	300	R	14-21	**LS**
CMX	300	Rebel	17-18	**LS**
CB	500	F	13-21	**LS**
CB	500	X	13-21	**LS**
CBR	500	R	13-21	**LS**
CMX	500	Rebel	17-21	**LS**
CMX	500	Rebel S	20-20	**LS**
CB	650	F	14-19	**LS**
CB	650	R Neo Sports Cafe	19-21	**LS**
CBR	650	F	14-20	**LS**
CBR	650	F ABS	14-20	**LS**
CBR	650	R	19-21	**LS**
CTX	700		14-18	**LS**
CTX	700	D ABS w/DCT	13-15	**LS**
CTX	700	N	14-18	**LS**
CTX	700	ND ABS w/DCT	14-15	**LS**
NM4	700	Vultus ABS w/DCT	15-15	**LS**
	750	X-ADV	17-19	**LS**
NC	750	D Integra	14-19	**LS**
NC	750	S w/DCT	14-19	**LS**
NC	750	X w/DCT	14-19	**LS**
NC	750	XAE	14-19	**LS**
KAWASAKI				
KLE	650	Versys	15-19	**LS**
KLE	650	Versys LT	15-16	**LS**
Z	750	R	11-12	**LS**
Z	800		13-16	**LS**
Z	800	ABS	13-16	**LS**
Z	800	e	13-16	**LS**
Z	800	e ABS	13-16	**LS**
Z	900		17-21	**LS**
SUZUKI				
GW	250	Inazuma F	15-19	**LS**
SFV	650	Gladius	09-16	**LS**
SV	650		16-20	**LS**
SV	650	X	18-20	**LS**

Available compounds **LS** **SBS 880**

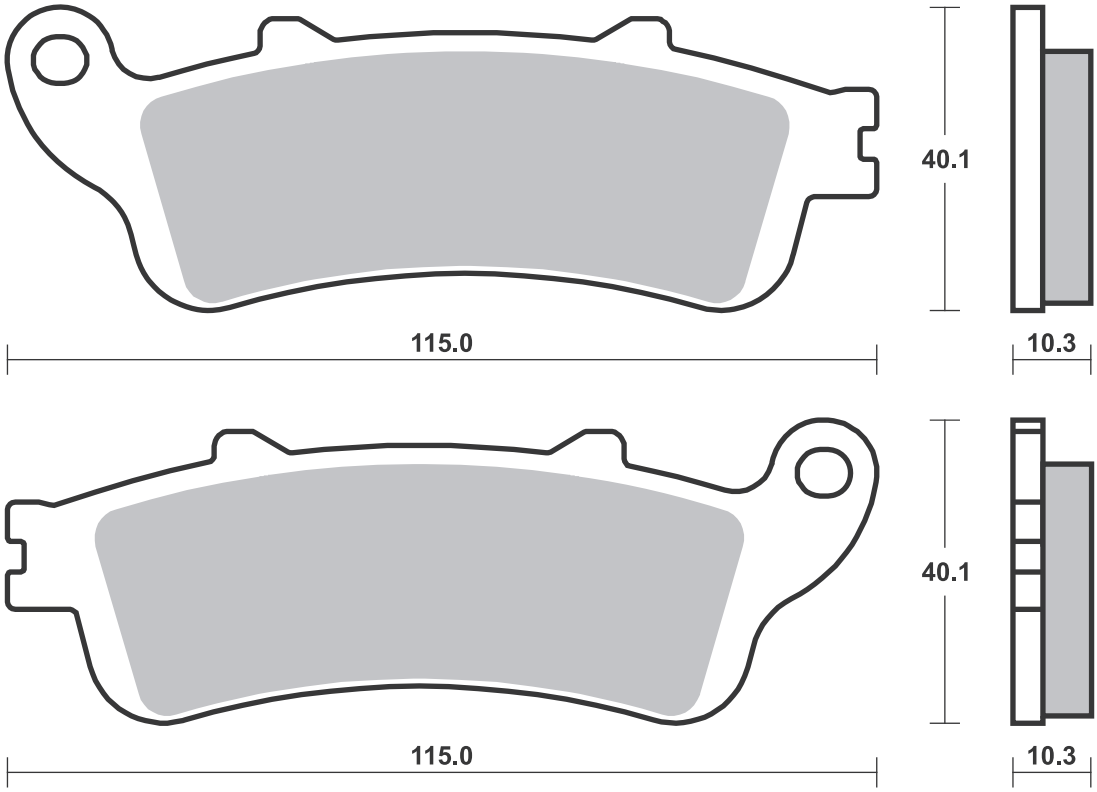

Available compounds **HF • LS • RQ** **SBS 881**

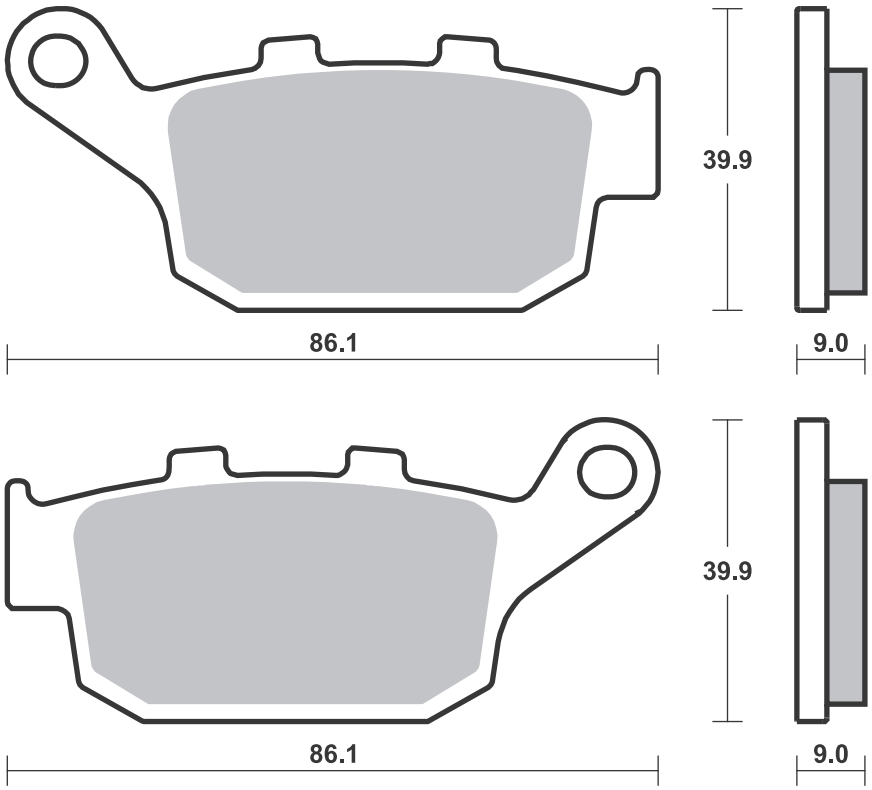

Dimensions in mm / Dimensions en mm • 1” = 25.4 mm , 1 mm = 0.04”

SBS 885 Recommended compound

GAS GAS				
TXT	125	(Formula cal.)	12-13	**RSI**
TXT	250	(Formula cal.)	12-13	**RSI**
TXT	280	(Formula cal.)	12-12	**RSI**
TXT	300	(Formula cal.)	12-12	**RSI**
HUSQVARNA				
TC	85		14-20	**RSI**
KTM				
		Freeride		
		Electric	12-14	**RSI**
E-SM		Freeride	15-16	**RSI**
E-SX		Freeride	15-16	**RSI**
E-XC		Freeride	15-18	**RSI**
SX	85		12-20	**RSI**
SX	85	(19"/		
		16" wheels)	13-20	**RSI**
	250	Freeride R	14-19	**RSI**
	350	Freeride	12-17	**RSI**
OHVALE				
GP-01	110		17-19	**RST**
GP-01	160		17-19	**RST**
GP-01	190		17-19	**RST**
SHERCO				
ST	80	(Formula cal.)	13-14	**RSI**
ST	125	(Formula cal.)	13-14	**RSI**
ST	250	(Formula cal.)	13-14	**RSI**
ST	290	(Formula cal.)	13-14	**RSI**

SHERCO				
ST	305	(Formula cal.)	13-14	**RSI**

SBS 886 Recommended compound

KAWASAKI				
VN	900	Vulcan Classic	06-16	**LS**
VN	900	Vulcan Classic		
		SE	11-16	**LS**
VN	900	Vulcan		
		Custom	07-16	**LS**
KZ	1000	Police	02-03	**LS**
VN	1500	Mean Streak	02-03	**LS**
VN	1500	Vulcan Classic		
		Fi	00-04	**LS**
VN	1500	Vulcan Nomad		
		Fi	00-04	**LS**
VN	1600	Mean Streak	04-05	**LS**
VN	1600	Nomad	05-05	**LS**
VN	1600	Vulcan Classic	03-08	**LS**
VN	1700	Voyager		
		Vaquero	09-14	**LS**
VN	1700	Vulcan Classic	09-14	**LS**
VN	1700	Vulcan Nomad	09-16	**LS**
VN	1700	Vulcan Voyager	09-16	**LS**
VN	2000	Vulcan	04-10	**LS**
SUZUKI				
C	1500	T Intruder	13-18	**LS**
C90	1500	Boulevard		
		B.O.S.S.	13-18	**LS**
M90	1500		09-18	**LS**
M95	1600	Boulevard	05-07	**LS**
VZ	1600	Marauder	04-04	**LS**

Available compounds **RST • CS • SI • RSI** **SBS 885**

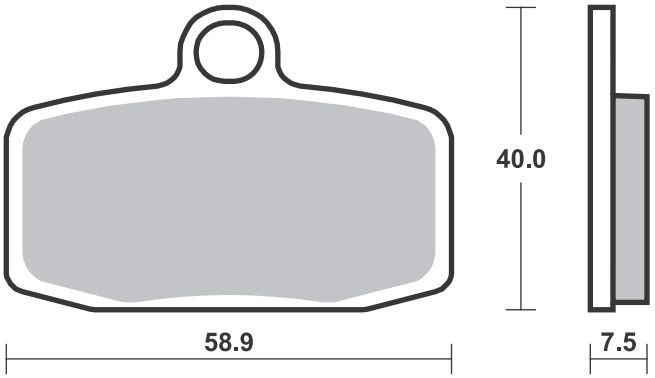

Available compounds **HF • LS** **SBS 886**

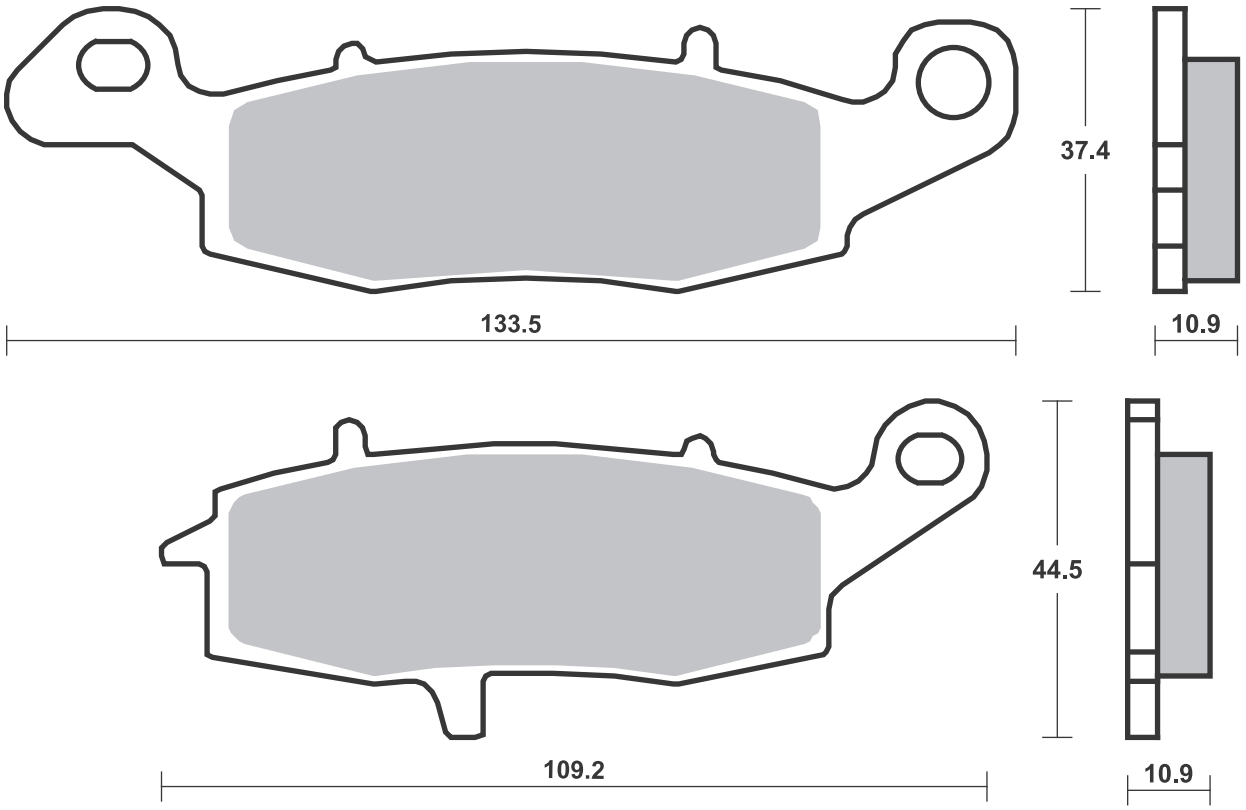

Dimensions in mm / Dimensions en mm • 1” = 25.4 mm , 1 mm = 0.04”

SBS 887 Recommended compound

BREMBO RACING CALIPERS	
Moto3/SBK XA88810/11,	
P2 34	
Moto3/SBK XA88820/21,	
P2 34	

SBS 889 Recommended compound

BREMBO RACING CALIPERS	
SBK Racing DX XB0.B1.31,	
P4 30/34	
SBK Racing SX XB0.B1.30,	
P4 30/34	

SBS 892 Recommended compound

HONDA				
VFR	1200	F w/DCT	10- 19	**LS**
VFR	1200	XC		
		Crosstourer	12- 19	**LS**
VFR	1200	XDC		
		Crosstourer		
		w/DCT	12- 19	**LS**

Available compounds **LS • DC • DS-1 • DS-2 • RQ** **SBS 887**

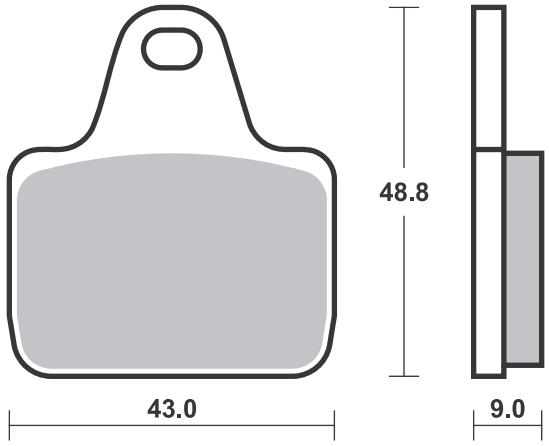

Available compounds **DS-1 • DS-2** **SBS 889**

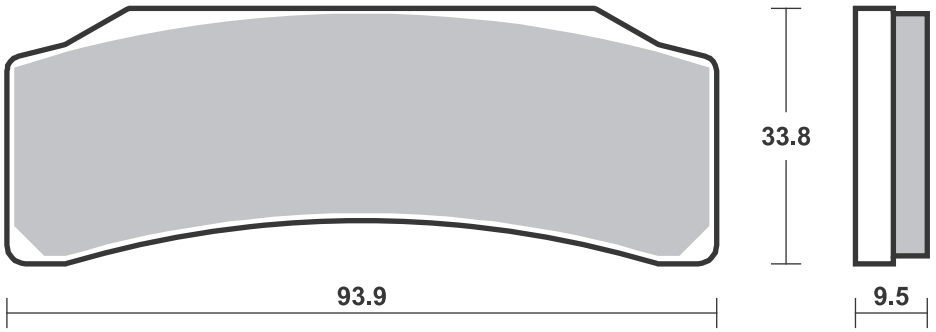

Available compounds **LS** **SBS 892**

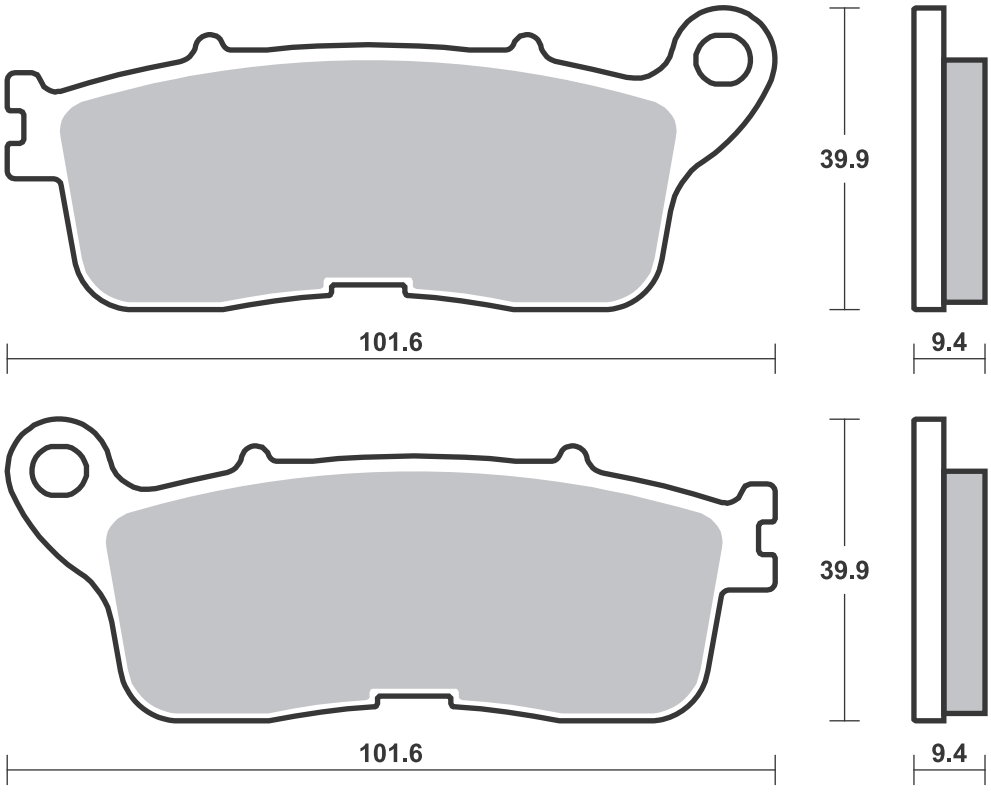

Dimensions in mm / Dimensions en mm • 1” = 25.4 mm , 1 mm = 0.04”

SBS 893 Recommended compound

SYM					
SN	250	Ni Wolf	14-15	**HF**	
SN	250	T2 Wolf	12-15	**HF**	
	300	Wolf Cafe Racer	15-15	**HF**	
	300	Wolf Classic	15-15	**HF**	
SB	300	Cafe Racer	16-17	**HF**	

SBS 894 Recommended compound

KAWASAKI					
ZX-6R	636	Ninja	13-18	**HS**	
ZX-6R	636	Ninja KRT ABS	13-18	**HS**	

SBS 895 Recommended compound

BETA					
	125	EVO	09-14		**RSI**
	200	EVO	09-14		**RSI**
	250	EVO (2-T / 4-T)	09-14		**RSI**
	290	EVO	09-13		**RSI**
	300	EVO	09-15		**RSI**

Available compounds **HF • HS** **SBS 893**

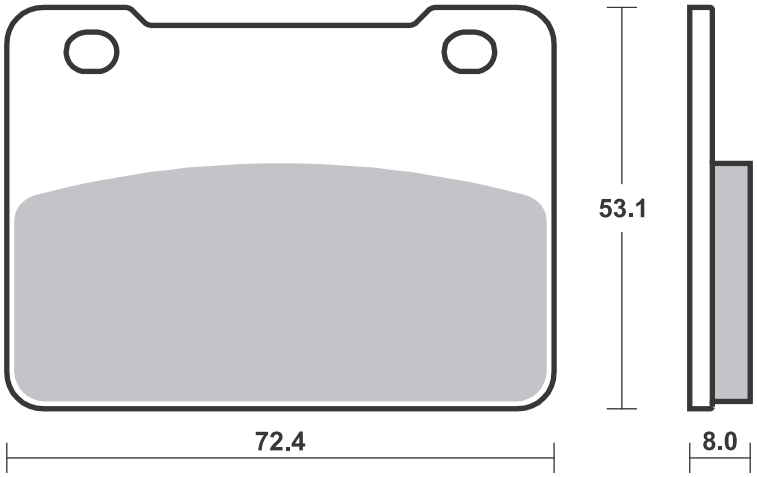

Available compounds **HS • SP • DC • RST** **SBS 894**

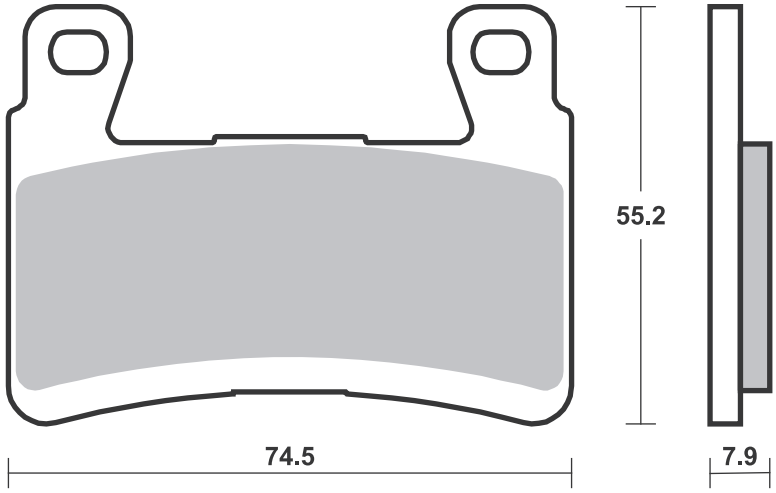

Available compounds **HF • RSI** **SBS 895**

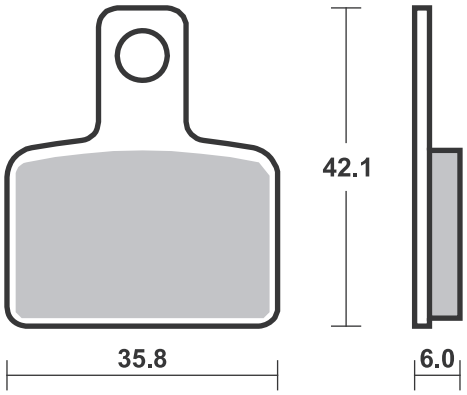

SBS 896 Recommended compound

BETA					
	80	Rev	08-10		**RSI**
	125	Rev 3	06-08		**RSI**
	200	Rev 3	06-08		**RSI**
	250	4-T Rev 3	07-11		**RSI**
	250	Rev 3	05-09		**RSI**
	270	Rev 3	05-08		**RSI**

SBS 897 Recommended compound

POLARIS					
		EV-LSV	10-11	**ATS**	
		LSV 4x4	11-12	**ATS**	
		Ranger 48v EV	13-18	**ATS**	
	500	Ranger 2x4	08-07	**ATS**	
	500	Ranger 2x4			
		EFi	08-13	**ATS**	
	500	Ranger 4x4	12-13	**ATS**	
	700	MVRS 4x4	08-08	**ATS**	**ATS**
	700	Ranger 4x4			
		EFi	08-08	**ATS**	
	700	Ranger 6x6			
		EFi	12-13	**ATS**	
	800	MVRS 4x4	08-08	**ATS**	**ATS**
	800	Ranger 4x4			
		EFi	10-10	**ATS**	**ATS**
	800	Ranger 6x6			
		EFi	12-15	**ATS**	**ATS**

POLARIS					
	800	Ranger Crew	12-15	**ATS**	**ATS**
	800	Ranger RZR4			
		EFi	12-14	**ATS**	
	800	Ranger XP	12-13	**ATS**	
	800	RZR-4	10-14	**ATS**	
	900	Ranger 4x4			
		Diesel	10-14	**ATS**	**ATS**
	900	Ranger RZR4			
		XP EFi	12-15	**ATS**	**ATS**
	900	Ranger RZR4			
		XP4 EFi	12-14	**ATS**	**ATS**
	925	RZR XP Turbo	16-19		**SI**
	925	RZR XP4 Turbo	16-19		**SI**
	925	RZR XP4 Turbo			
		S	19-20		**SI**
	925	RZR XP4 Turbo			
		S Velocity	19-20		**SI**

POLARIS					
	1000	General EPS	16-18	**ATS**	
	1000	Ranger RZR			
		XP	14-14	**ATS**	**ATS**
	1050	MV Diesel			
		Crew	13-18	**ATS**	**ATS**

SBS 898 Recommended compound

POLARIS					
	450	Outlaw MXR	09-11	**ATS**	
	450	Outlaw S	08-08	**ATS**	
	525	Outlaw	07-13	**ATS**	
	525	Outlaw IRS	08-13	**ATS**	
	525	Outlaw S	08-11	**ATS**	
	570	Ranger RZR			
		EFi	12-13	**ATS**	
	800	Ranger RZR			
		EFi	08-14	**ATS**	
	800	Ranger RZR			
		S EFi	09-15	**ATS**	
	800	RZR	08-15	**ATS**	
RZR	900	50/55/60 Inch	15-20		**PSI**
RZR-S	900	60 Inch	20-20		**PSI**
	1000	General EPS	16-18		**ATS**
RZR	1000	60 Inch	16-20		**PSI**
RZR-S	1000	60 Inch	20-20		**PSI**

Available compounds **HF • RSI** **SBS 896**

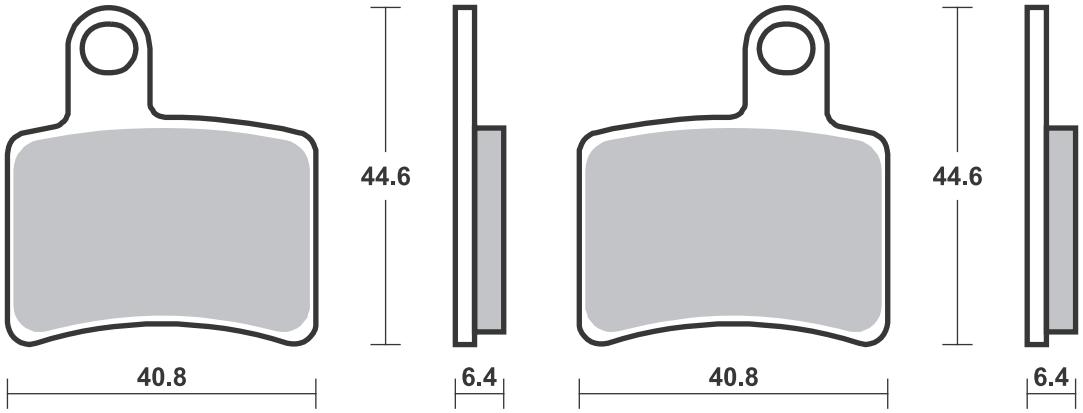

Available compounds **SI • RSI • ATS • PSI** **SBS 897**

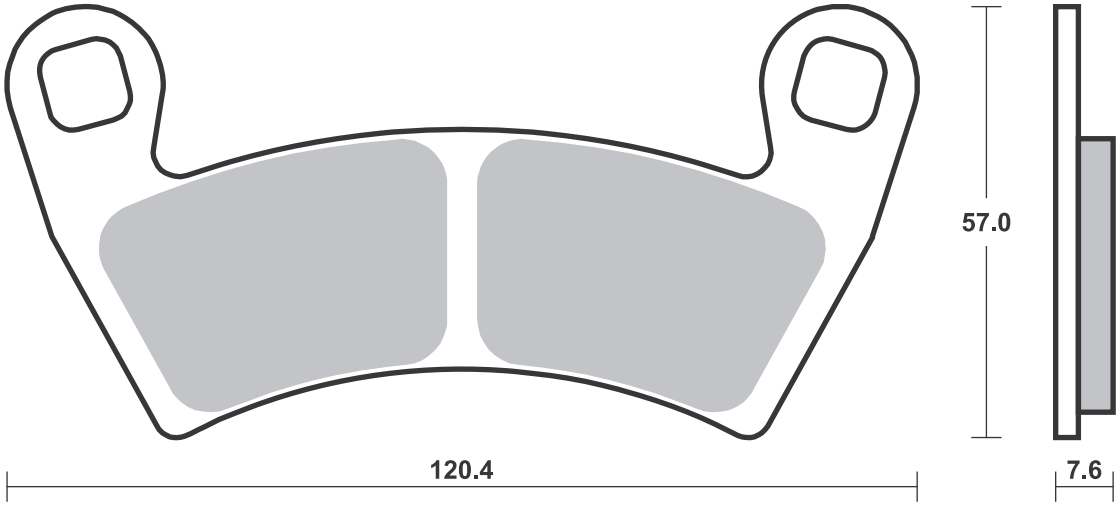

Available compounds **SI • RSI • ATS • PSI** **SBS 898**

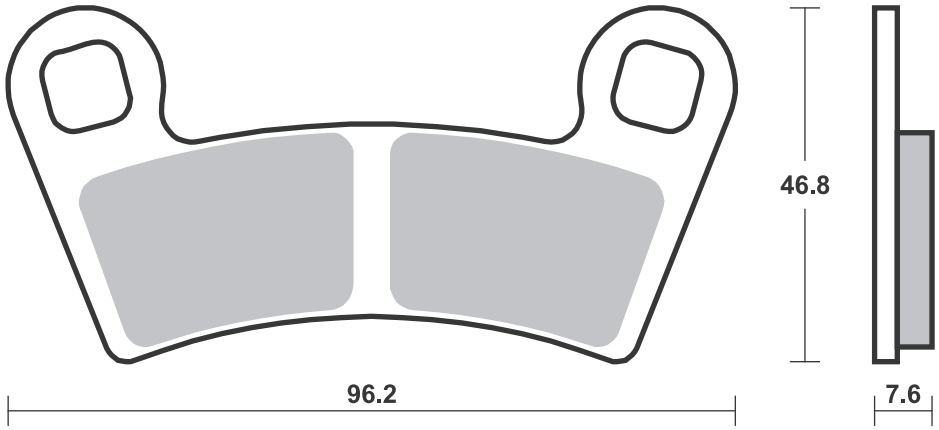

Dimensions in mm / Dimensions en mm • 1” = 25.4 mm , 1 mm = 0.04”

SBS 899 Recommended compound

POLARIS					
500	Sportsman HO (from 16.12.2008)	09-14			**ATS**
550	Sportsman	11-14	**ATS**		**ATS**
550	Sportsman EPS	10-14	**ATS**		**ATS**
550	Sportsman EPS X2	14-14	**ATS**		**ATS**
550	Sportsman Touring EPS	10-12	**ATS**		**ATS**
550	Sportsman X2	10-14	**ATS**		**ATS**
550	Sportsman XP	09-12	**ATS**		**ATS**
550	Sportsman XP EPS	09-14	**ATS**		**ATS**
550	Sportsman XP Touring EPS	12-14	**ATS**		**ATS**
800	Sportsman (from 16.12.2008)	09-14			**ATS**
850	Forest	15-15	**ATS**		**ATS**
850	Scrambler	15-15	**ATS**		**ATS**
850	Scrambler HO EPS	13-15	**ATS**		**ATS**
850	Scrambler MD	15-15	**ATS**		**ATS**
850	Scrambler XP HO EPS	14-15	**ATS**		**ATS**
850	Sportsman	11-13	**ATS**		**ATS**
850	Sportsman MV	12-12	**ATS**		**ATS**
850	Sportsman Touring	14-15	**ATS**		**ATS**
850	Sportsman Touring EPS	10-13	**ATS**		**ATS**
850	Sportsman Touring HO EPS	13-14	**ATS**		**ATS**
850	Sportsman Touring MD	15-15	**ATS**		**ATS**
850	Sportsman X2	11-11	**ATS**		**ATS**
850	Sportsman XP	09-14	**ATS**		**ATS**
850	Sportsman XP EPS	09-14	**ATS**		**ATS**
850	Sportsman XP HO EPS	13-14	**ATS**		**ATS**
850	Sportsman XP HO EPS MD	15-15	**ATS**		**ATS**
850	Sportsman XP Touring EPS	15-15	**ATS**		**ATS**
1000	Forest	15-15	**ATS**		**ATS**
1000	Scrambler MD	15-18	**ATS**		**ATS**
1000	Scrambler XP	15-18	**ATS**		**ATS**
1000	Scrambler XP HO EPS	14-14	**ATS**		**ATS**
1000	Sportsman MD	15-18	**ATS**		**ATS**
1000	Sportsman Touring	15-18	**ATS**		**ATS**
1000	Sportsman XP	15-18	**ATS**		**ATS**

SBS 900 Recommended compound

APRILIA					
RS	660	20-21	**SP**		
RSV	1000 Tuono V4 R	14-14	**HS**		
RSV	1100 Tuono V4	15-15	**HS**		
RSV	1100 Tuono V4 Factory	15-16	**HS**		
RSV	1100 Tuono V4 RR	15-16	**HS**		
	1200 Caponord	13-19	**SP**		
	1200 Caponord Rally	15-19	**SP**		
	1200 Caponord Travel Pack	16-19	**SP**		
BENELLI					
	752 S	20-20	**HS**		
	800 Leoncino	20-20	**HS**		
BMW					
F	800 R	15-18	**HS**		
F	900 R	20-21	**SP**		
F	900 XR	20-21	**SP**		
S	1000 XR	15-19	**SP**		
R	1200 GS	13-18	**SP**		
R	1200 GS Adventure	14-16	**SP**		
R	1200 Nine-T	14-21	**HS**		
R	1200 R	15-18	**HS**		
R	1200 RS	14-18	**HS**		
R	1200 RT	14-18	**HS**		
R	1250 R	19-21	**HS**		
R	1250 RS	19-21	**HS**		
CAN-AM					
	1330 Spyder F3	15-19	**HS**		
	1330 Spyder F3 Limited	16-19	**HS**		
	1330 Spyder F3-S	15-19	**HS**		
	1330 Spyder F3-T	16-19	**HS**		
CAN-AM					
	1330 Spyder RS	14-16	**HS**		
	1330 Spyder RS RSS	13-13	**HS**		
	1330 Spyder RSS	14-15	**HS**		
	1330 Spyder RSS Special Series	15-15	**HS**		
	1330 Spyder RT	14-18	**HS**		
	1330 Spyder RT Limited	13-19	**HS**		
	1330 Spyder RT RTS	13-13	**HS**		
	1330 Spyder RTS	14-15	**HS**		
	1330 Spyder RTS Special Series	15-15	**HS**		
	1330 Spyder ST	14-16	**HS**		
	1330 Spyder ST Limited	13-15	**HS**		
	1330 Spyder ST STS	13-13	**HS**		
	1330 Spyder STS	14-15	**HS**		
	1330 Spyder STS Special Series	15-15	**HS**		
DUCATI					
	797 Monster	17-21	**HS**		
	797 Monster+	17-20	**HS**		
	800 Scrambler	17-18	**HS**		
	800 Scrambler Classic	15-18	**HS**		
	800 Scrambler CR	17-21	**HS**		
	800 Scrambler CR Cafe Racer	17-21	**HS**		
	800 Scrambler Enduro	15-16	**HS**		
	800 Scrambler Flat Track Pro	16-16	**HS**		
	800 Scrambler Full Throttle	15-21	**HS**		
DUCATI					
	800 Scrambler Icon	15-21	**HS**		
	800 Scrambler Icon Dark	20-21	**HS**		
	800 Scrambler Mach 2.0	18-19	**HS**		
	800 Scrambler SCR	20-20	**HS**		
	800 Scrambler Street Classic	17-18	**HS**		
	800 Scrambler Urban Enduro	16-16	**HS**		
	800 Scrambler-X DS Desert Sled	17-21	**HS**		
	821 Hypermotard	13-16	**HS**		
	821 Hypermotard ABS	13-16	**HS**		
	821 Hypermotard SP	13-16	**HS**		
	821 Hypermotard SP ABS	13-16	**HS**		
	821 Hyperstrada	13-16	**HS**		
	821 Hyperstrada ABS	13-16	**HS**		
	821 Monster	14-21	**HS**		
	821 Monster Dark	15-16	**HS**		
	821 Monster Stealth	19-21	**HS**		
	899 Panigale	14-15	**HS**		
	939 Hypermotard	16-18	**HS**		
	939 Hypermotard SP	16-18	**HS**		
	939 Hyperstrada	16-16	**HS**		
	939 SuperSport	17-21	**HS**		
	939 SuperSport S	17-21	**HS**		
	950 Hypermotard	19-19	**HS**		

Applications for this part number continues on following page.

Available compounds **SI • RSI • ATS** **SBS 899**

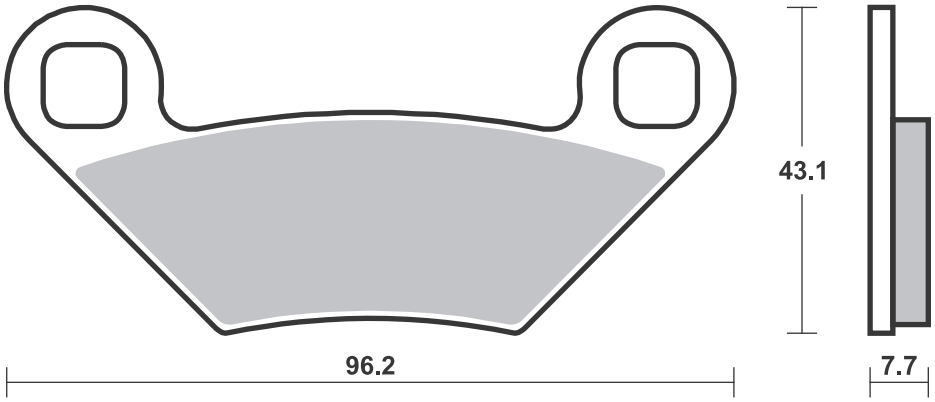

Available compounds **HS • SP • DC • RST • DS-1 • DS-2 • H.HS** **SBS 900**

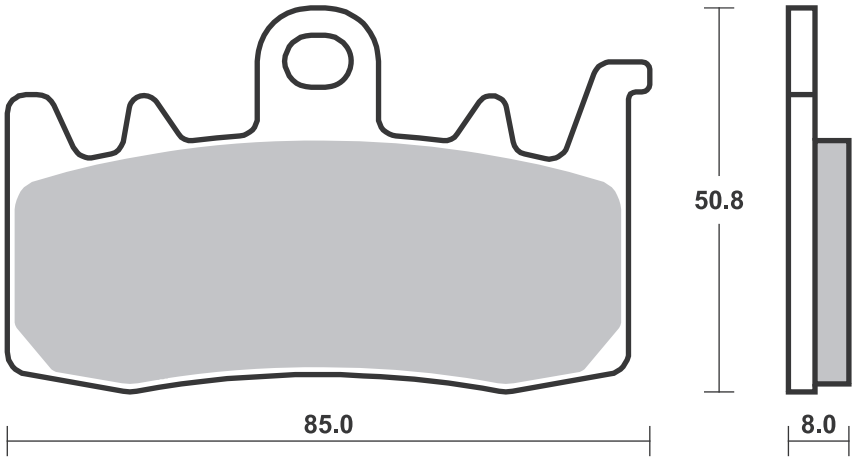

SBS 900 Recommended compound

DUCATI

950	Hypermotard			
	SP	19-19	**HS**	
950	Multistrada	17-21	**HS**	
950	Multistrada			
	S	19-21	**HS**	
955	Panigale V2	20-21	**SP**	
959	Panigale	16-20	**HS**	
959	Panigale			
	Corse	18-20	**HS**	
1100	Scrambler	18-19	**HS**	
1100	Scrambler			
	Desert X	20-20	**SP**	
1100	Scrambler			
	Special	18-19	**HS**	
1100	Scrambler			
	Sport	18-19	**HS**	
1200	Monster	14-21	**HS**	
1200	Multistrada	15-16	**SP**	
1200	Multistrada			
	Enduro	16-18	**SP**	
1200	Multistrada			
	Enduro Pro	18-18	**SP**	
1260	Multistrada			
	Enduro	19-21	**SP**	

FANTIC

500	Caballero	17-17	**HS**	

HARLEY DAVIDSON

	Livewire	19-21	**H.HS**	

HARLEY DAVIDSON

975	Bronx	20-21	**H.HS**	
1250	Pan America	20-21	**H.HS**	

INDIAN

FTR	1200	19-20	**H.HS**	
FTR	1200 S	19-20	**H.HS**	
1800	Challenger	20-20	**H.HS**	
1800	Challenger			
	Dark Horse	20-20	**H.HS**	
1800	Challenger			
	Limited	20-20	**H.HS**	

KAWASAKI

Z	1000 H2	20-20	**SP**	

MV AGUSTA

800	Rivale	13-17	**HS**	
800	Stradale	15-16	**HS**	
800	Turismo			
	Veloce	14-19	**HS**	
800	Turismo			
	Veloce			
	Lusso	14-20	**HS**	
800	Turismo			
	Veloce RC	17-20	**HS**	

NORTON

961	Commando			
	Cafe Racer			
	MKII	18-19	**HS**	

NORTON

961	Commando			
	Sport	18-19	**HS**	
961	Dominator			
	Naked	17-19	**HS**	

SWM

400	Varez	20-20	**HS**	

TRIUMPH

765	Street			
	Triple R	17-20	**HS**	
765	Street			
	Triple R Low	17-18	**HS**	
1200	Tiger Explorer	16-17	**SP**	
1200	Tiger XCA	18-20	**SP**	
1200	Tiger XCX	18-20	**SP**	
1200	Tiger XR	18-19	**SP**	
1200	Tiger XRT	18-20	**SP**	
1200	Tiger XRX	18-20	**SP**	
1200	Tiger XRX Low	18-20	**SP**	
2500	Rocket III GT	19-20		**SP**
2500	Rocket III R	19-20		**SP**

SBS 901 Recommended compound

APRILIA

RSV4-RF	1000		15-20	**SP**	
RSV4-RR	1000		15-20	**SP**	
RSV	1100	Tuono V4			
		Factory	17-18	**HS**	
RSV	1100	Tuono V4			
		RR	17-19	**HS**	

BIMOTA

BB3	1000		14-18	**SP**	
DB7	1099		09-09	**HS**	
DB8	1198		10-14	**SP**	
DB11	1200	VLX	13-13	**HS**	

BMW

S	1000	RR HP4	12-14	**SP**	
	1200	HP2 Sport	08-10	**SP**	

BREMBO RACING CALIPERS

100 mm Radial GP4
RX 220B01020 P4 32
(disc min. Th. 4,0 mm)
108 mm Radial GP4
RX 220B01020 P4 32
(disc min. Th. 4,0 mm)
130 mm Radial GP4
RX 220B01020 P4 32
(disc min. Th. 4,0 mm)

DUCATI

1200	Diavel	11-18	**HS**	
1200	Diavel Strada	11-14	**HS**	
1200	Xdiavel	16-18	**HS**	
1200	Xdiavel S	16-18	**HS**	
1260	Diavel	19-20	**HS**	
1260	Diavel S	19-20	**HS**	
1260	Xdiavel	19-19	**HS**	
1260	Xdiavel S	19-19	**HS**	

ENERGICA

	Ego	15-21	**SP**	
	Eva			
	EsseEsse9	18-21	**SP**	
	Eva Ribelle	15-21	**SP**	

HONDA

CBR	1000 RR SP	14-19	**SP**	
CBR	1000 RR SP2	17-19	**SP**	
CBR	1000 RR-R SP			
	Fireblade	20-21	**SP**	
RC213V-S	1000	16-18	**SP**	

KTM

890	Duke R	20-20	**SP**	
1290	Super Duke			
	GT	16-20	**HS**	

MOTO-MORINI

1200	Corsaro ZT	20-20	**SP**	

MOTO-MORINI

1200	Corsaro ZZ	18-20	**HS**	
1200	Milano	18-19	**HS**	
1200	Scrambler	18-18	**HS**	
1200	Super			
	Scrambler	20-20	**SP**	

MV AGUSTA

675	F3	15-20	**HS**	
675	F3 RC	16-20	**HS**	
800	F3	14-20	**HS**	
800	F3 RC	16-20	**HS**	
800	Superveloce	20-20	**SP**	

TRIUMPH

675	Daytona R			
	Triple	11-18	**HS**	
765	Daytona Moto2	20-20	**SP**	
765	Street			
	Triple RS	17-20	**HS**	
1050	Speed 94R	15-16	**HS**	
1050	Speed Triple	16-17	**HS**	
1050	Speed Triple R	12-18	**HS**	
1050	Speed			
	Triple RS	16-20	**HS**	
1050	Speed Triple S	16-20	**HS**	
1200	Scrambler XC	19-20	**HS**	
1200	Scrambler XE	19-20	**HS**	
1200	Thruxton R	16-19	**HS**	
1200	Thruxton RS	20-20	**SP**	

Available compounds **HS • SP • DC • RST • DS-1 • DS-2 • H.HS** **SBS 900**

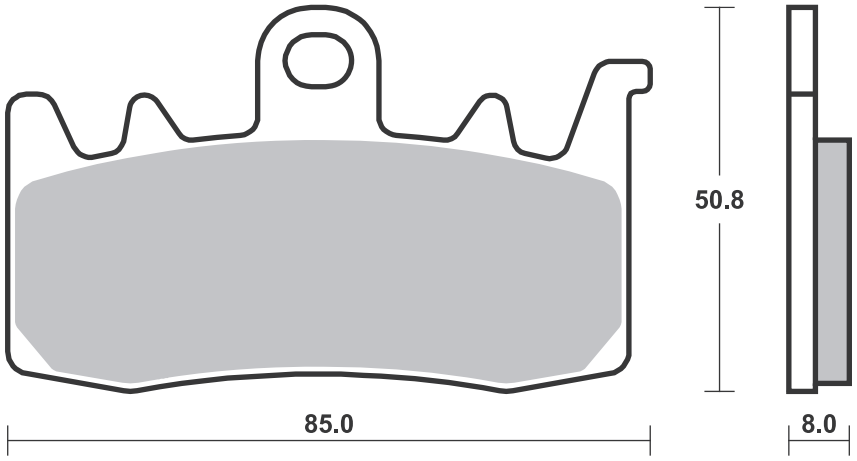

Available compounds **HS • SP • DC • RST • DS-1 • DS-2** **SBS 901**

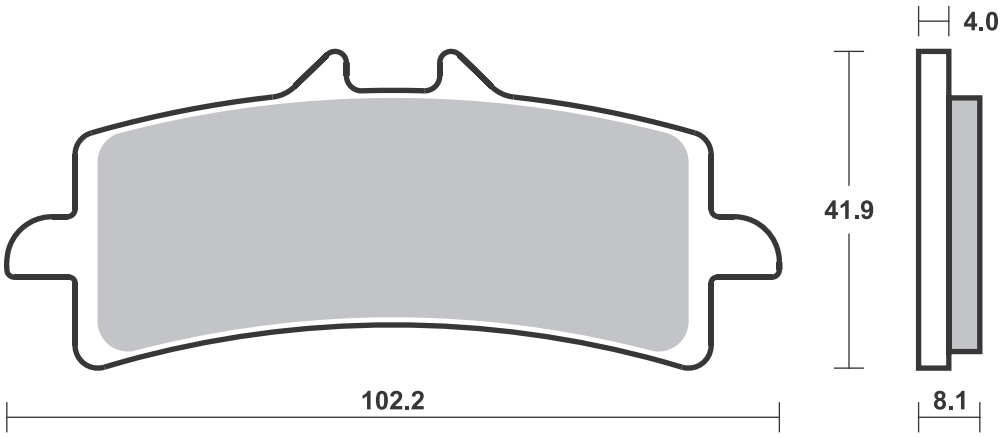

Dimensions in mm / Dimensions en mm • 1” = 25.4 mm , 1 mm = 0.04”

SBS 904 Recommended compound

HARLEY DAVIDSON				
FLHTCUTG	1690	Tri Glide		
		Ultra		
		Classic		
		Trike	09-13	**H.LS**
FLHXXX	1690	Street		
		Glide		
		Trike	10-11	**H.LS**

SBS 905 Recommended compound

POLARIS				
	170	Ranger		
		RZR	09-18	**SI**
	200	Phoenix	10-14	**SI**

Available compounds **H.LS** **SBS 904**

1 set = 4 pcs.

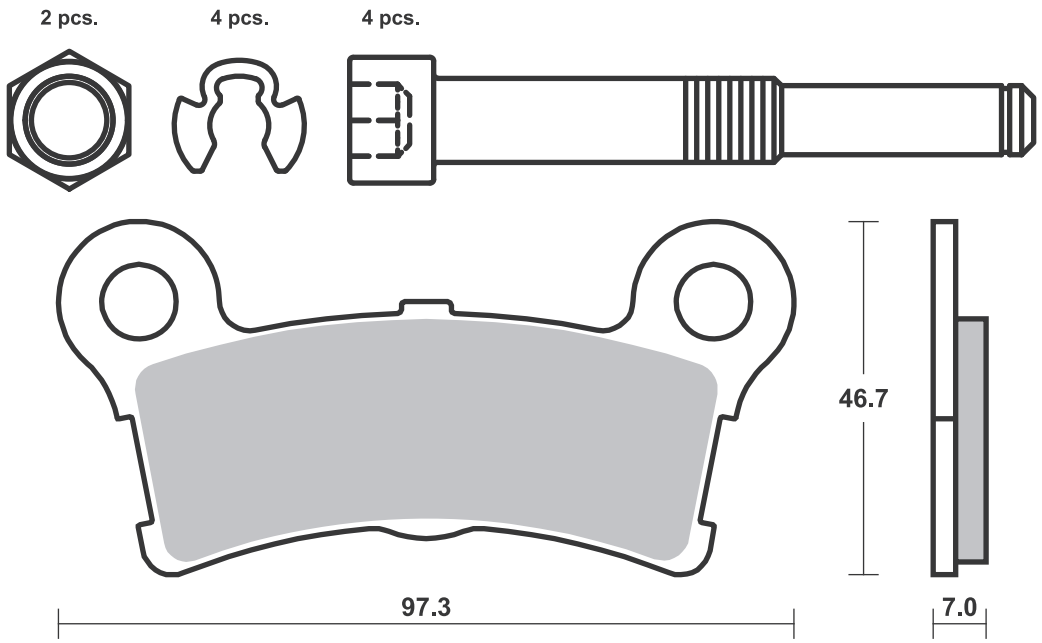

Available compounds **SI • RSI • ATS** **SBS 905**

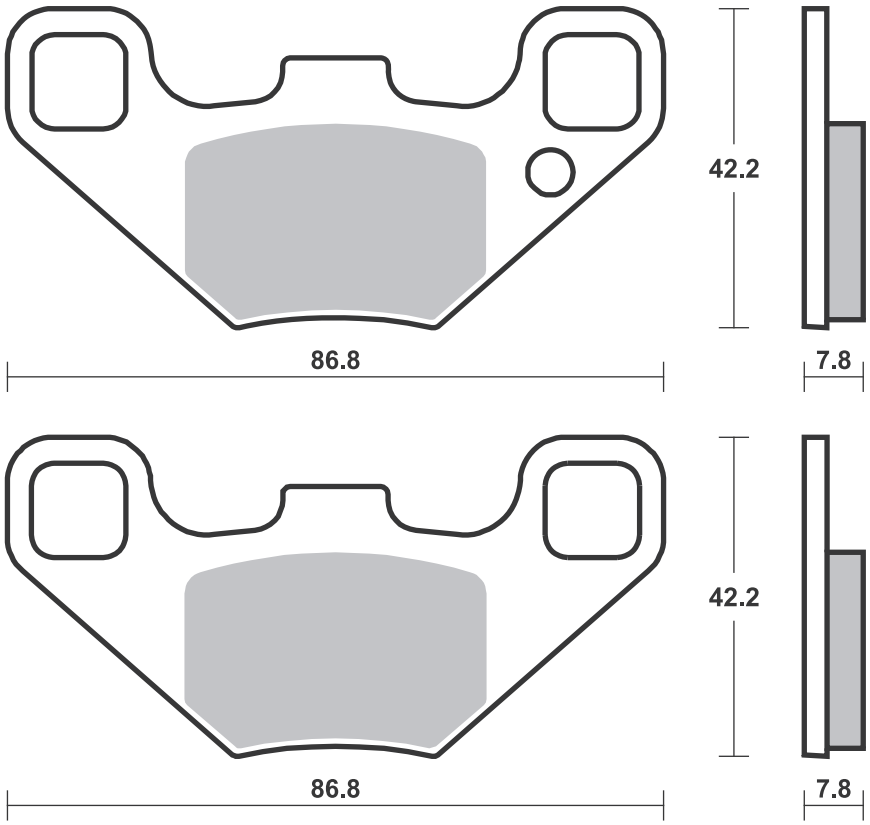

SBS 906 Recommended compound

POLARIS					
	170	Ranger RZR	09-18		**SI**

SBS 907 Recommended compound

CAN-AM					
DS	450		08-12	**SI**	

SBS 908 Recommended compound

CAN-AM					
DS	450		08-12		**SI**
JOHN DEERE					
HPX	350	Gator	10-14	**SI**	**SI**

Available compounds **SI • RSI • ATS** **SBS 906**

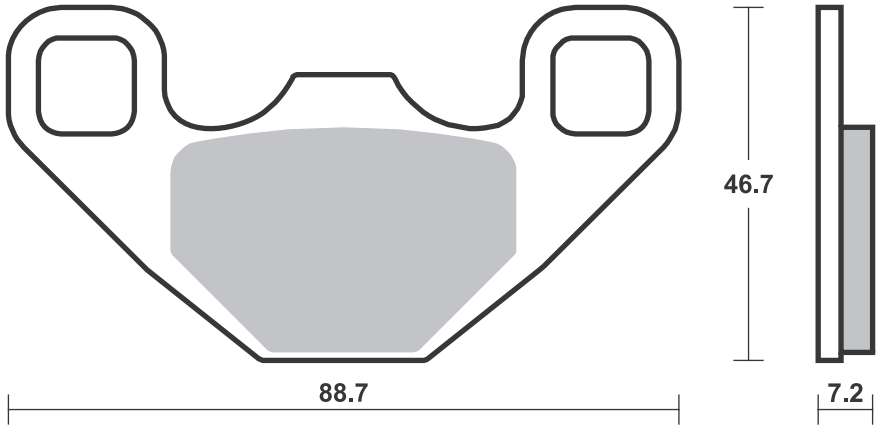

Available compounds **SI • RSI** **SBS 907**

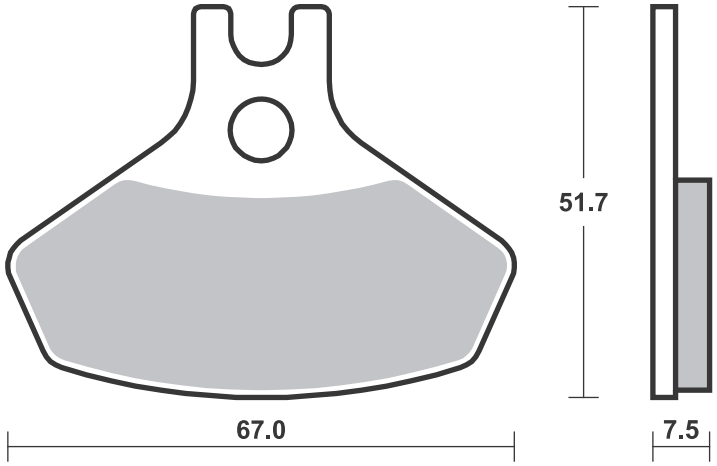

Available compounds **SI • RSI** **SBS 908**

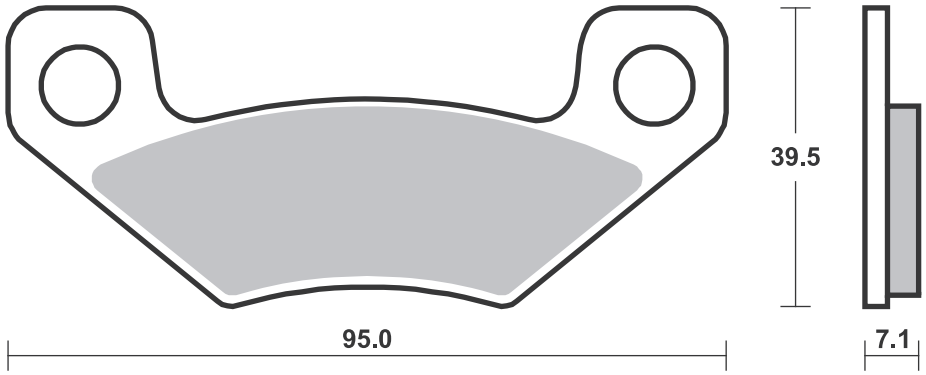

SBS 909 Recommended compound

BREMBO RACING CALIPERS	
SBK Racing DX XB0.B1.31,	
P4 30/34	
(for Radiators X93.12.50)	
SBK Racing SX XB0.B1.30,	
P4 30/34	
(for Radiators X93.12.50)	

SBS 910 Recommended compound

CAN-AM				
450	Outlander	15 - 18	**SI**	**SI**
450	Outlander MAX	15 - 18	**SI**	**SI**
500	Outlander	13 - 14	**SI**	**SI**
500	Outlander MAX	13 - 14	**SI**	**SI**
500	Renegade	12 - 13	**SI**	**SI**
500	Renegade	14 - 14	**SI**	**SI**
650	Outlander	13 - 15	**SI**	**SI**
650	Outlander 6x6	14 - 18	**SI**	**SI**
650	Outlander MAX	13 - 15	**SI**	**SI**
800	Outlander	12 - 15	**SI**	**SI**
800	Outlander MAX	13 - 14	**SI**	**SI**
800	Renegade	12 - 13	**SI**	**SI**
800	Renegade	14 - 15	**SI**	**SI**
1000	Outlander	12 - 15	**SI**	**SI**
1000	Outlander 6x6	14 - 18	**SI**	**SI**
1000	Outlander MAX	12 - 18	**SI**	**SI**
1000	Renegade	12 - 13	**SI**	**SI**
1000	Renegade	14 - 18	**SI**	**SI**

Available compounds **DS-1 • DS-2** **SBS 909**

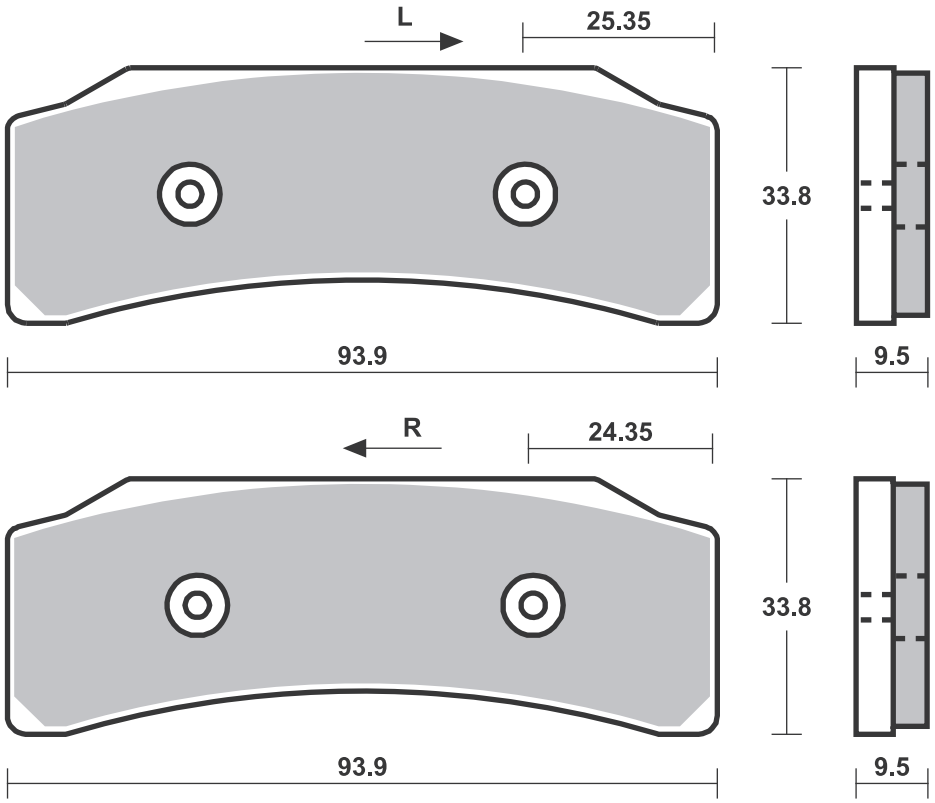

Available compounds **SI • RSI** **SBS 910**

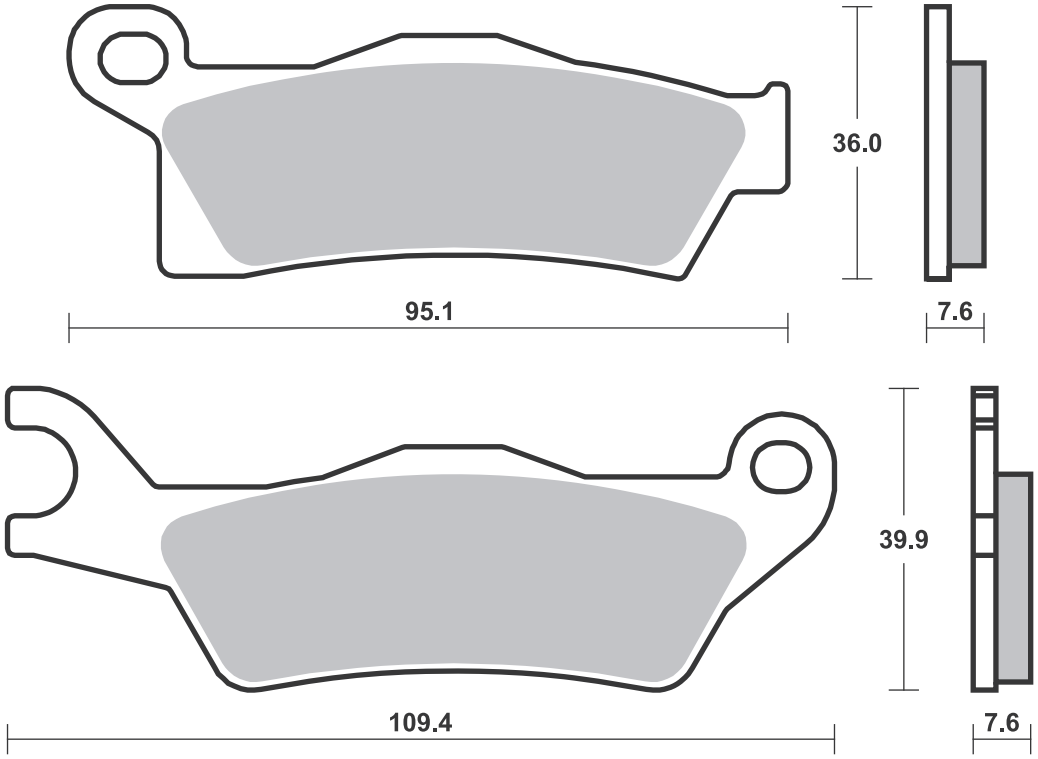

SBS 911 Recommended compound

CAN-AM					
	450	Outlander	15-18	**SI**	
	450	Outlander MAX	15-18	**SI**	
	500	Outlander	13-14	**SI**	
	500	Outlander MAX	13-14	**SI**	
	500	Renegade	12-13	**SI**	
	500	Renegade	14-14	**SI**	**SI**
	650	Outlander	13-15	**SI**	
	650	Outlander 6x6	14-18	**SI**	**SI**
	650	Outlander MAX	13-15	**SI**	
	800	Outlander	12-15	**SI**	
	800	Outlander MAX	13-14	**SI**	
	800	Renegade	12-13	**SI**	
	800	Renegade	14-15	**SI**	**SI**
	1000	Outlander	12-15	**SI**	
	1000	Outlander 6x6	14-18	**SI**	**SI**
	1000	Outlander MAX	12-18	**SI**	
	1000	Renegade	12-13	**SI**	
	1000	Renegade	14-18	**SI**	**SI**

SBS 912 Recommended compound

ARCTIC CAT					
	1000	Wildcat 4X	16-18	**ATS**	
	1000	Wildcat X	16-18	**ATS**	
	1000	Wildcat X Ltd.	17-18	**ATS**	
	1000	Wildcat X SE	17-18	**ATS**	
JOHN DEERE					
XUV	625	Gator	11-11	**ATS**	
XUV	825	Gator	11-11	**ATS**	
XUV	855	D Gator	11-11	**ATS**	

Available compounds **SI • RSI** **SBS 911**

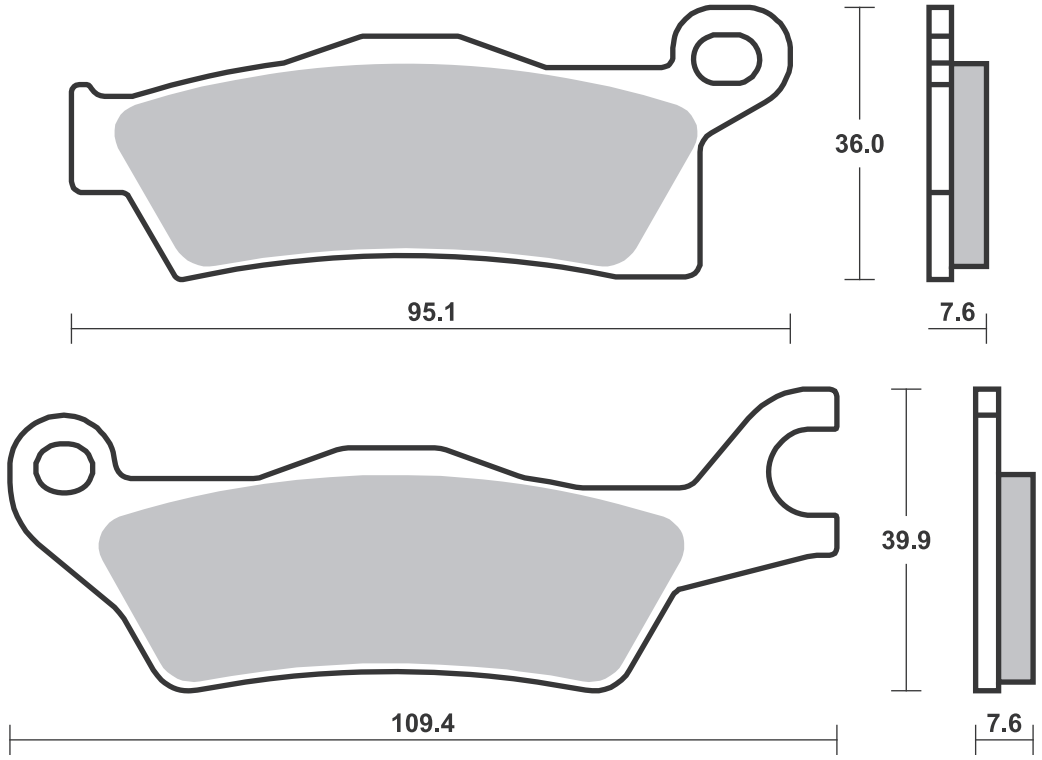

Available compounds **SI • RSI • ATS** **SBS 912**

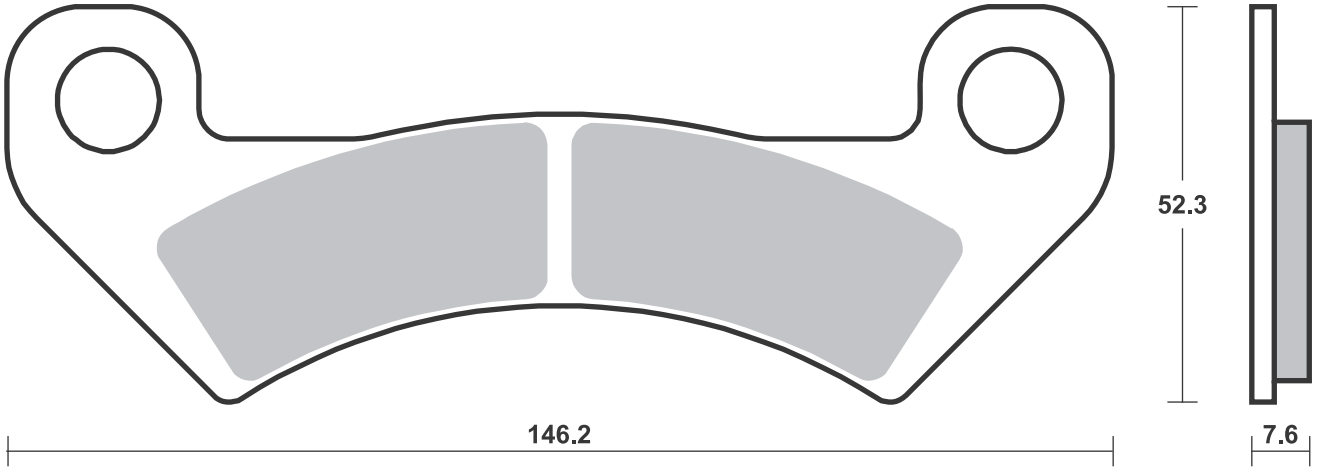

SBS 914 Recommended compound

CF MOTO				
	450	C-Force L	16-17	**SI**
	450	G-Force L	16-17	**SI**
CF	500	Terralander	13-15	**SI**
	550	C-Force	16-17	**SI**
CF	625	Terralander	11-15	**SI**
CF	800	Terralander	12-14	**SI**
GOES				
	360	Max	08-14	**SI**
	520	Max	07-12	**SI**
G	520		07-12	**SI**
G	525		12-14	**SI**
G	620		11-14	**SI**
G	625	A	12-14	**SI**

SBS 915 Recommended compound

BENELLI				
TNT	125		18-19	**HF**
TNT	135		18-19	**HF**
HONDA				
	125	Grom	14-21	**HF**
CB	125	R	18-20	**HF**
CBR	125	R	11-18	**HF**
MSX	125		14-21	**HF**
CRF	250	L	13-15	**SI**
CRF	250	L ABS	17-21	**SI**
CRF	250	M	14-18	**SI**
CRF	250	Rally	17-19	**SI**
CB	300	R	18-21	**HF**
CB	300	R Neo		
		Sports Cafe	19-19	**HF**
SUZUKI				
GSX-R	125	RL	17-21	**HF**
GSX-R	125	RLX	17-21	**HF**
GSX-S	125	ML	17-19	**HF**
GSX-S	125	MLX	17-19	**HF**

Available compounds **SI • RSI** **SBS 914**

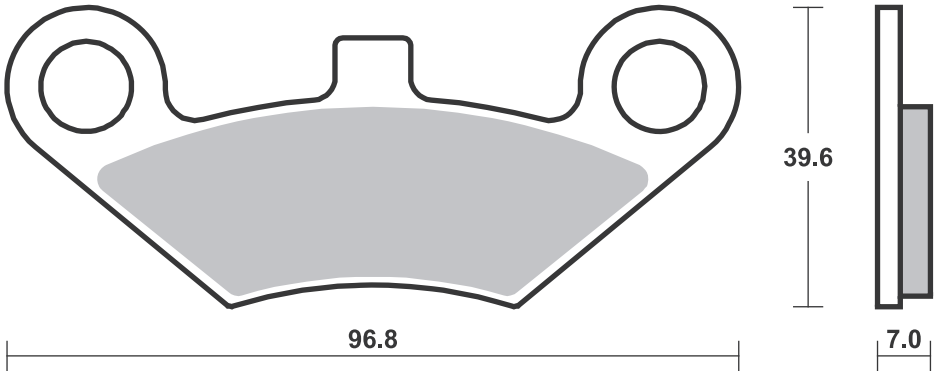

Available compounds **HF • SI • RSI** **SBS 915**

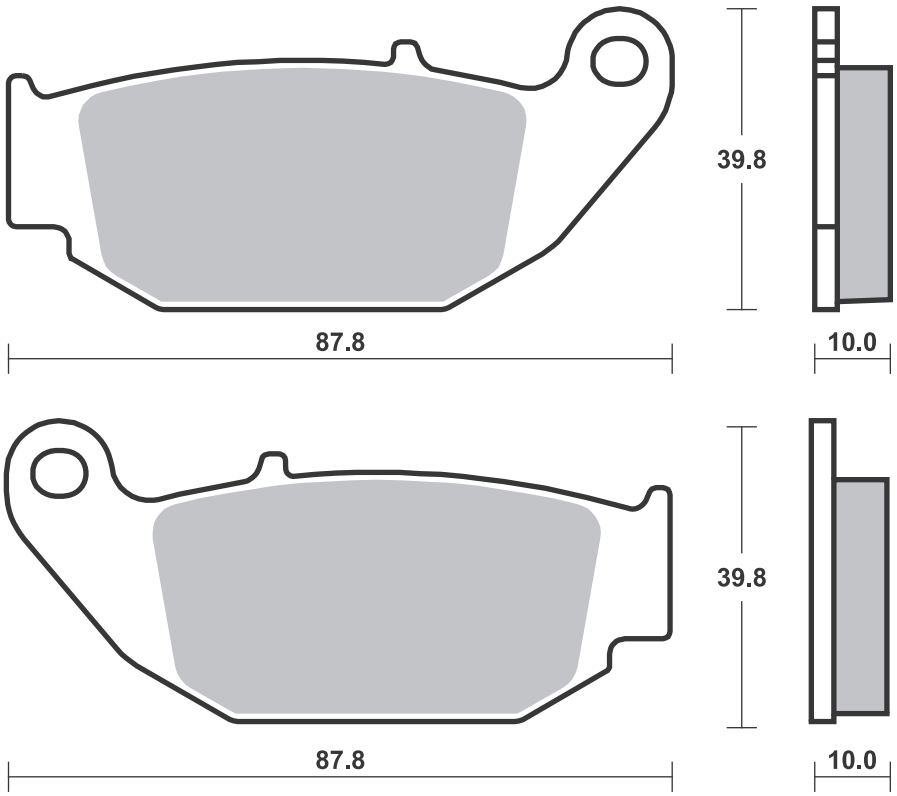

Dimensions in mm / Dimensions en mm • 1” = 25.4 mm , 1 mm = 0.04”

SBS 920 Recommended compound

SUZUKI				
C109R	1800		08-12	**LS**
M	1800	R Intruder	06-16	**LS**
M109R	1800		06-18	**LS**
M109R	1800	BOSS	14-14	**LS**
M109R2	1800		08-16	**LS**

SBS 921 Recommended compound

KYMCO				
	400	Maxxer (Parking Brake)	08-10	**HF**
	400	MXU (Parking Brake)	08-11	**HF**
	450	i Maxxer (Parking Brake)	10-14	**HF**
	450	i MXU (Parking Brake)	11-14	**HF**

Available compounds **HF • LS** **SBS 920**

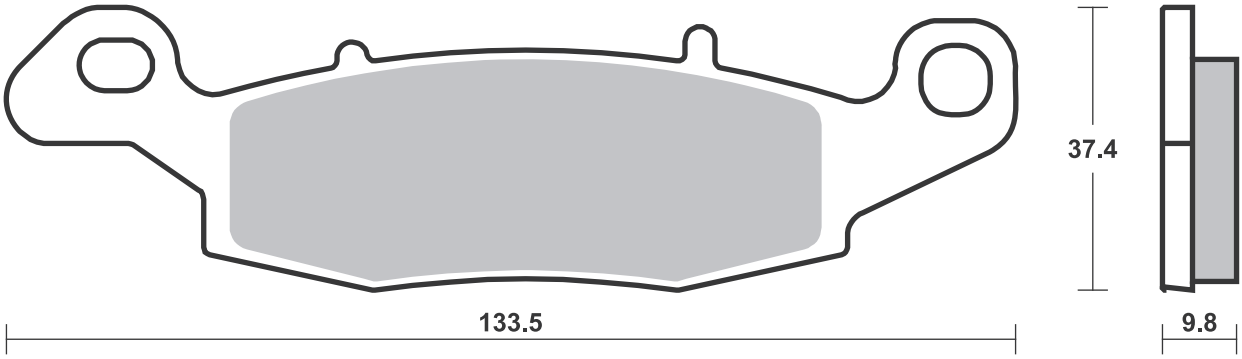

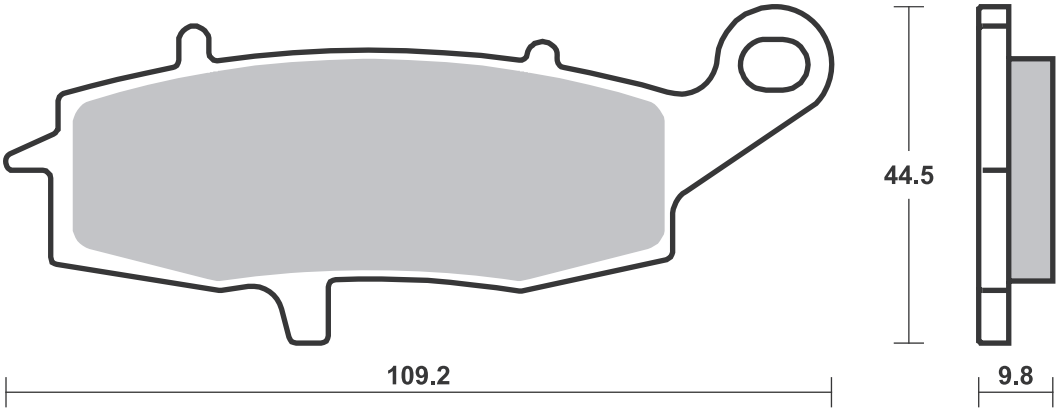

Available compounds **HF** **SBS 921**

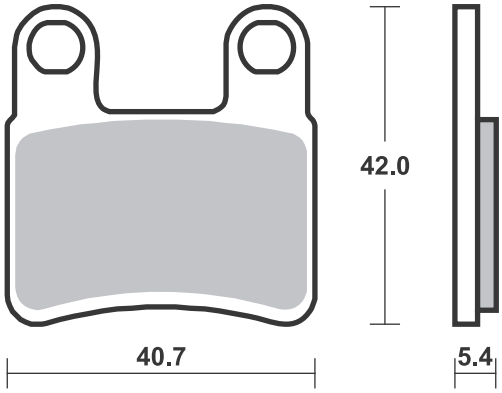

SBS 922 Recommended compound

HARLEY DAVIDSON					
FLHTCUTG	1690	Tri Glide Ultra	14-16	**H.HS**	
FLRT	1690	Freewheeler	15-16	**H.HS**	
FLHTCUTG	1750	Tri Glide Ultra	17-19	**H.HS**	
FLRT	1750	Freewheeler	17-19	**H.HS**	

Available compounds **H.HS** **SBS 922**

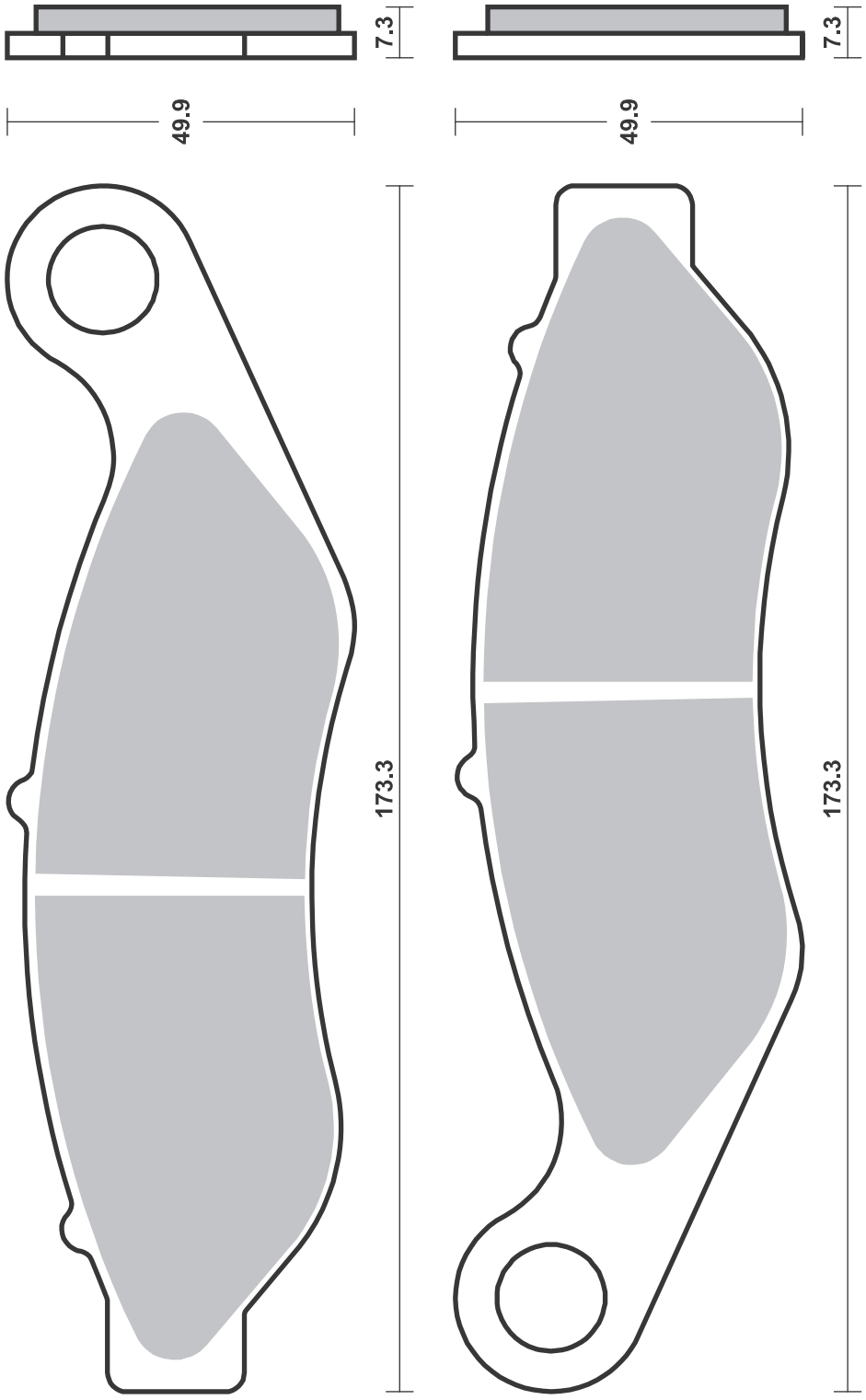

Dimensions in mm / Dimensions en mm • 1” = 25.4 mm , 1 mm = 0.04”

SBS 923 Recommended compound

HARLEY DAVIDSON					
FLHTCUTG	1690	Tri Glide			
		Ultra	14 - 16		**H.LS**
FLRT	1690	Freewheeler			
			15 - 16		**H.LS**
FLHTCUTG	1750	Tri Glide			
		Ultra	17 - 19		**H.LS**
FLRT	1750	Freewheeler			
			17 - 19		**H.LS**

SBS 924 Recommended compound

HARLEY DAVIDSON					
XG	500	Street	14 - 15	**H.HF**	**H.HF**
XG	750	Street	14 - 15	**H.HF**	**H.HF**

Available compounds **H.LS** **SBS 923**

1 set = 4 pcs.

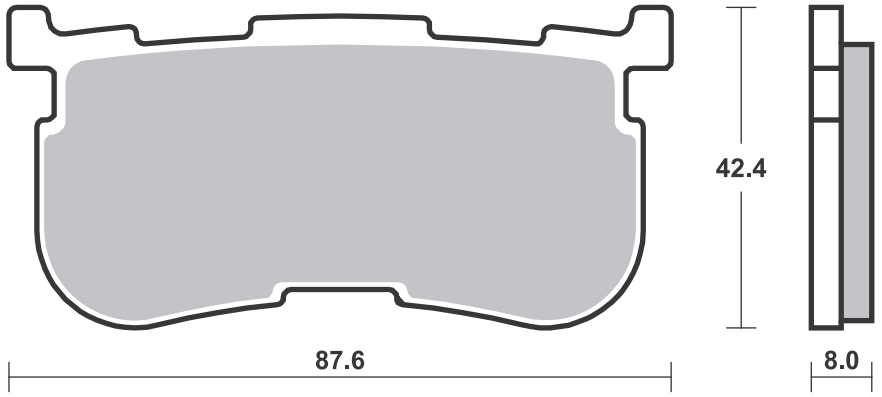

Available compounds **H.HF • H.CT • H.HS • H.LS** **SBS 924**

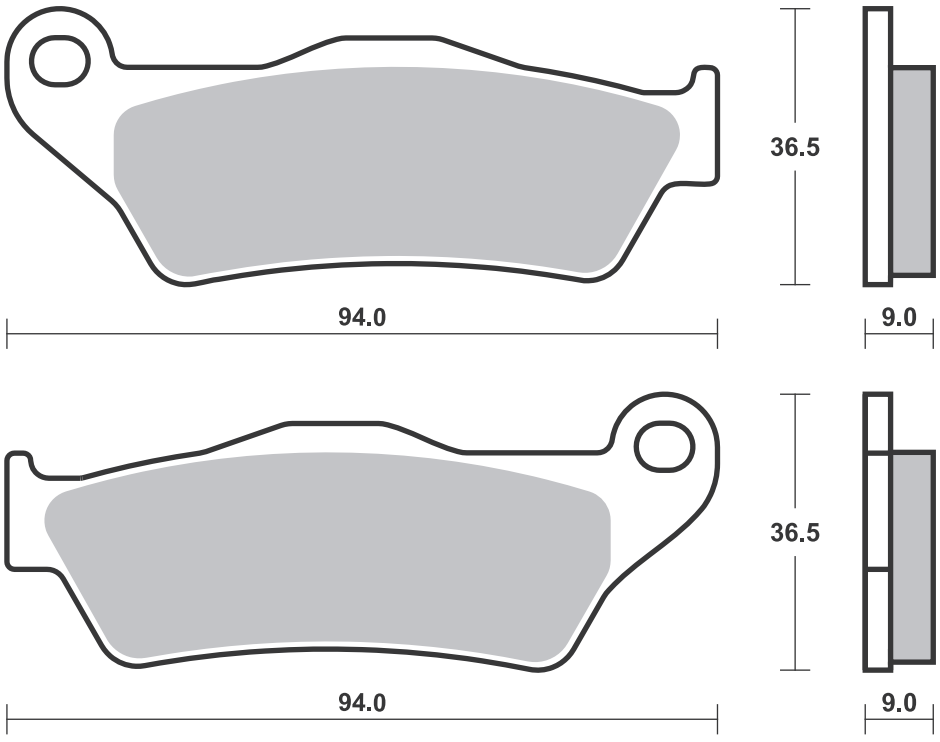

SBS 925 Recommended compound

KAWASAKI				
Z	125 Pro	17-18	**HF**	
Z	125 Pro KRT Ed.	18-18	**HF**	
Z	125 Pro KRT SE	18-18	**HF**	

SBS 929 Recommended compound

INDIAN				
	1000 Scout Sixty	16-16	**H.HS**	
	1130 Scout	15-16	**H.HS**	

Available compounds **HF • RSI** **SBS 925**

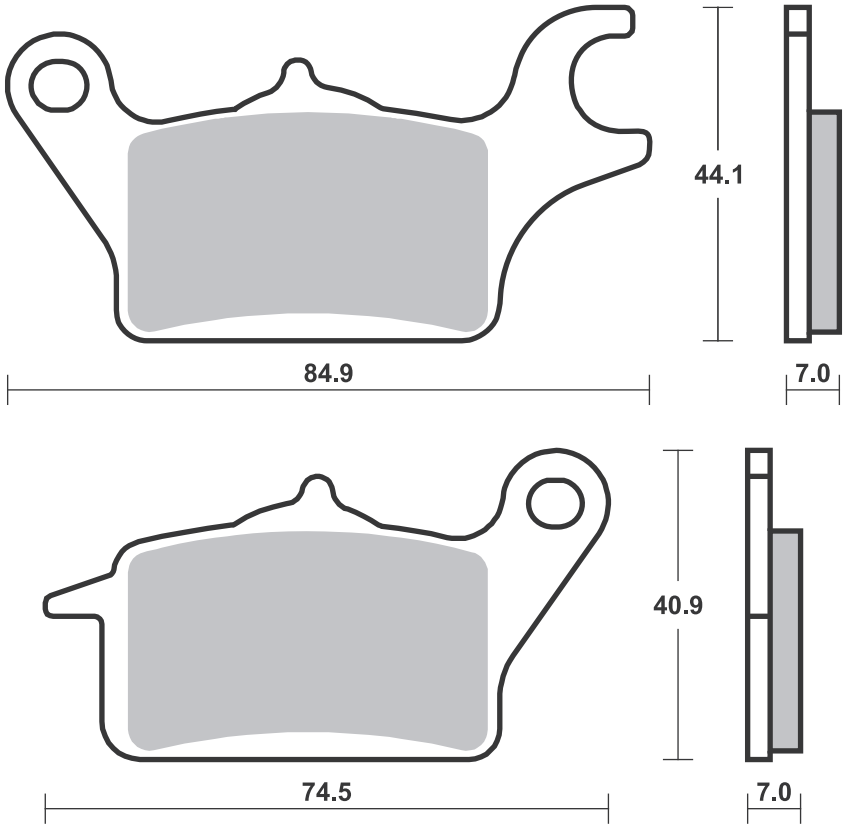

Available compounds **H.HF • H.CT • H.HS** **SBS 929**

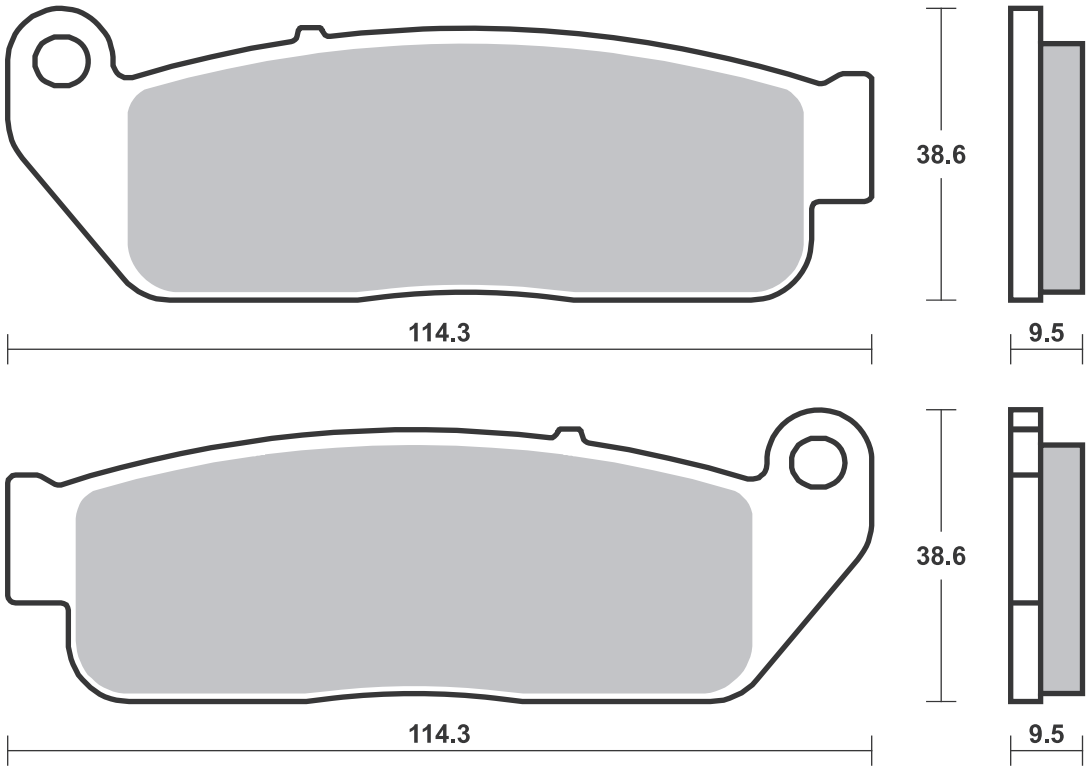

SBS 930 Recommended compound

INDIAN		
1000 Scout Sixty	16-16	**H.LS**
1130 Scout	15-16	**H.LS**

Available compounds **H.HF • H.CT • H.LS** **SBS 930**

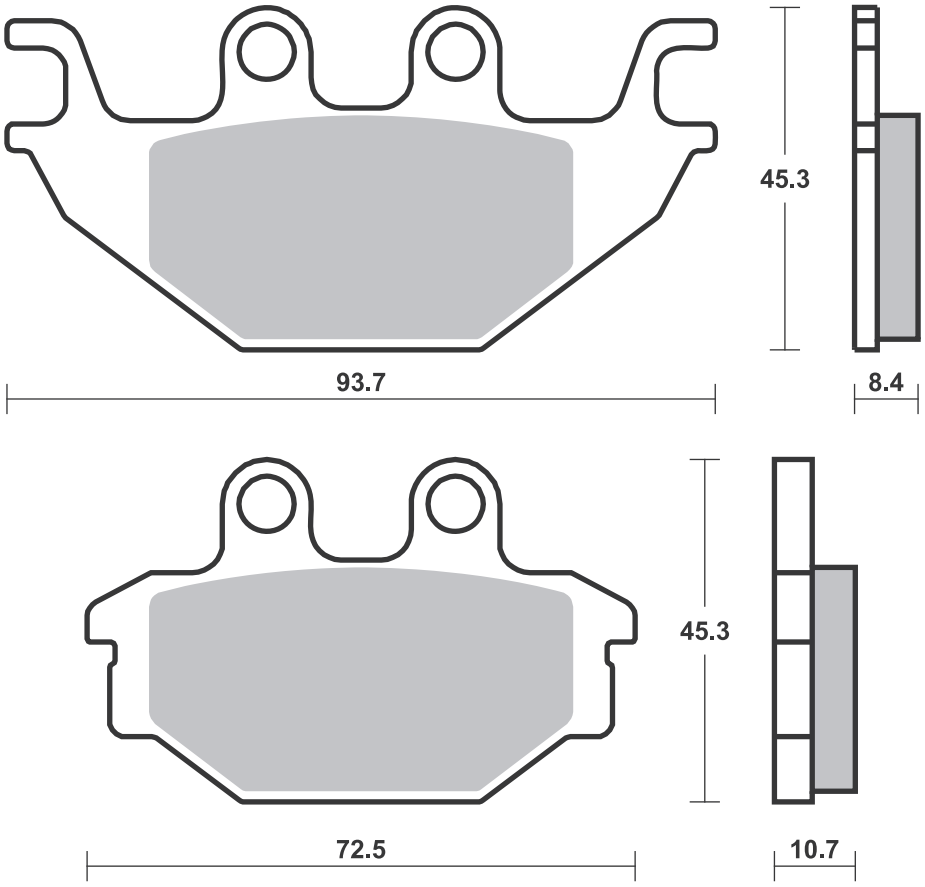

SBS 931 Recommended compound

YAMAHA					
YZF	321	R3	15-21	**HS**	

Available compounds **HF • HS • DC • RST • DS-1 • DS-2** **SBS 931**

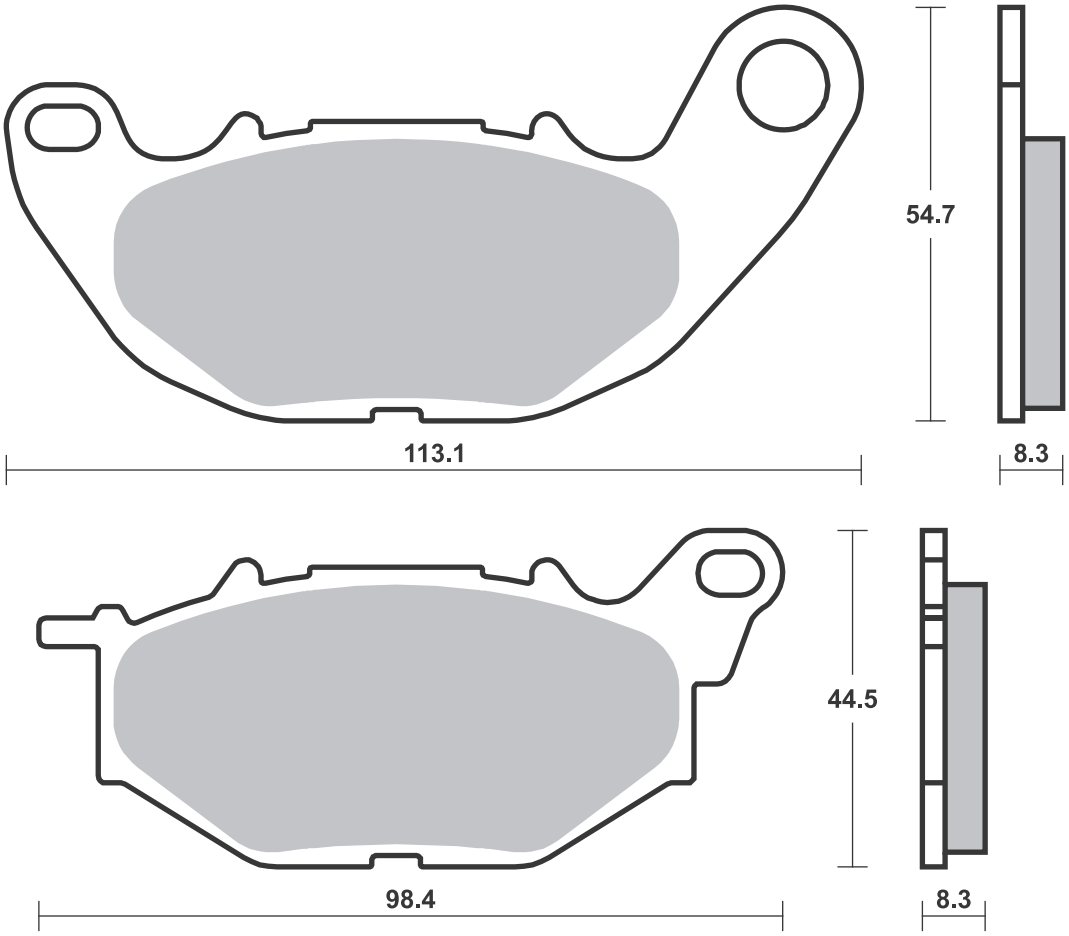

Dimensions in mm / Dimensions en mm • 1” = 25.4 mm , 1 mm = 0.04”

SBS 932 Recommended compound

YAMAHA			
YZF	321 R3	15-21	**HF**

SBS 933 Recommended compound

BENELLI			
BN	302 R	17-19	**HS**
BN	302 S	18-19	**HS**

Available compounds **HF • RQ** **SBS 932**

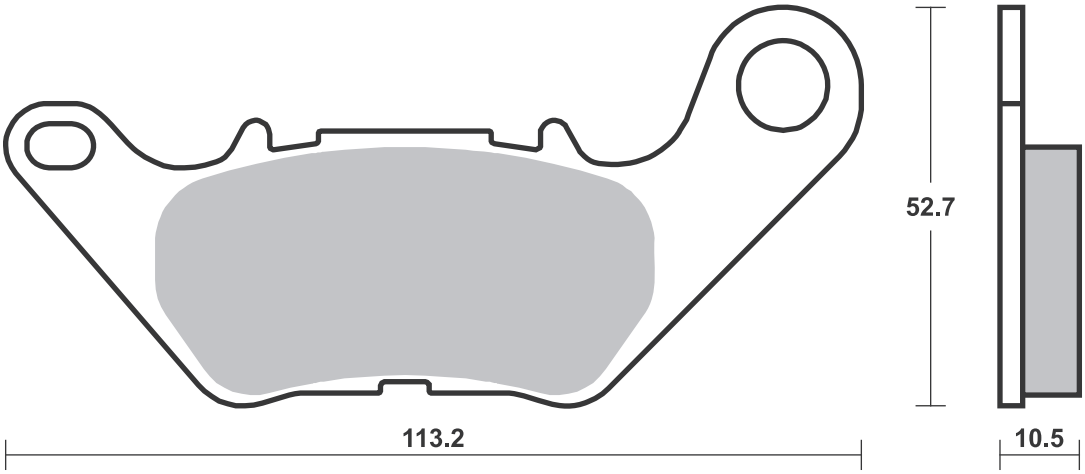

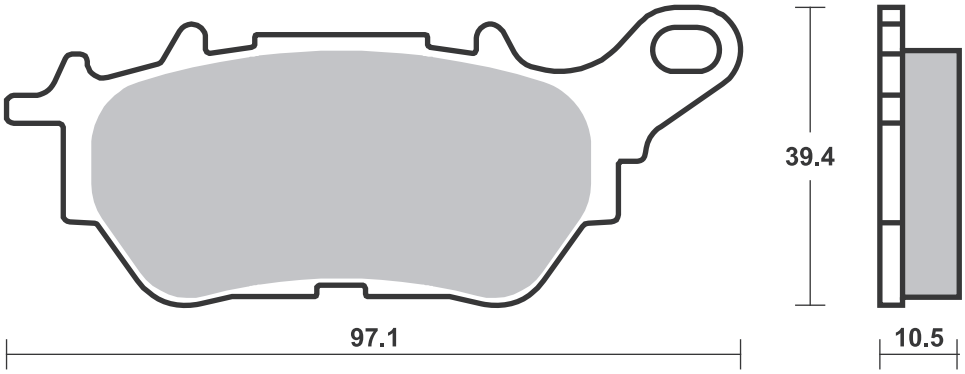

Available compounds **HS** **SBS 933**

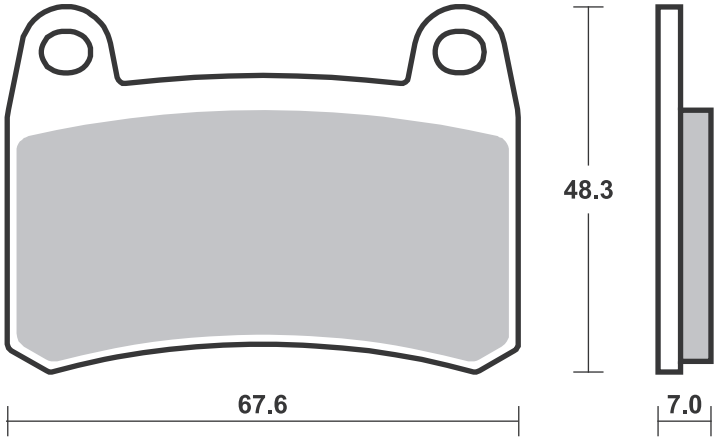

SBS 934 Recommended compound

HARLEY DAVIDSON					
XL	883	L Super Low	14-18	**H.HS**	
XL	883	N Iron	14-18	**H.HS**	
XL	883	R Roadster	14-15	**H.HS**	
XL	1200	C, CA, CB, CP Custom	14-19	**H.HS**	
XL	1200	CX	17-17	**H.HS**	
XL	1200	Iron	18-20	**H.HS**	
XL	1200	Roadster	18-20	**H.HS**	
XL	1200	T Super Low	15-17	**H.HS**	
XL	1200	V Seventy-Two	14-16	**H.HS**	
XL	1200	X Forty-Eight	14-18	**H.HS**	
XL	1200	X Forty-Eight Spec.	19-20	**H.HS**	

SBS 939 Recommended compound

GAS GAS					
TXT	125	Pro Racing	14-14	**RSI**	
TXT	125	Pro Replica	13-13	**RSI**	
TXT	250	Pro Racing	14-19	**RSI**	
TXT	250	Pro Replica	13-14	**RSI**	
TXT	280	Pro Racing	14-19	**RSI**	
TXT	280	Pro Replica	13-13	**RSI**	
TXT	300	Pro Racing	14-19	**RSI**	
TXT	300	Pro Replica	13-13	**RSI**	
HONDA					
Cota	260	4Ride	16-19	**RSI**	
Cota	260	4RT Race Replica	15-19	**RSI**	
Cota	300	RR	16-19	**RSI**	
JOTAGAS					
JT	125		14-19	**RSI**	
JT	250		14-19	**RSI**	
JT	280		14-19	**RSI**	
JT	300		14-19	**RSI**	
MONTESA					
Cota	260	4Ride	16-19	**RSI**	
Cota	260	4RT Race Replica	15-19	**RSI**	

MONTESA					
Cota	300	RR	16-19	**RSI**	
OSSA					
TR	300	Factory R	15-15	**RSI**	
VERTIGO					
	300	Combat Camo Works	15-19	**RSI**	
	300	Combat Ice Hell	15-19	**RSI**	
	300	Combat RR	15-19	**RSI**	

Available compounds **H.HF • H.CT • H.HS** **SBS 934**

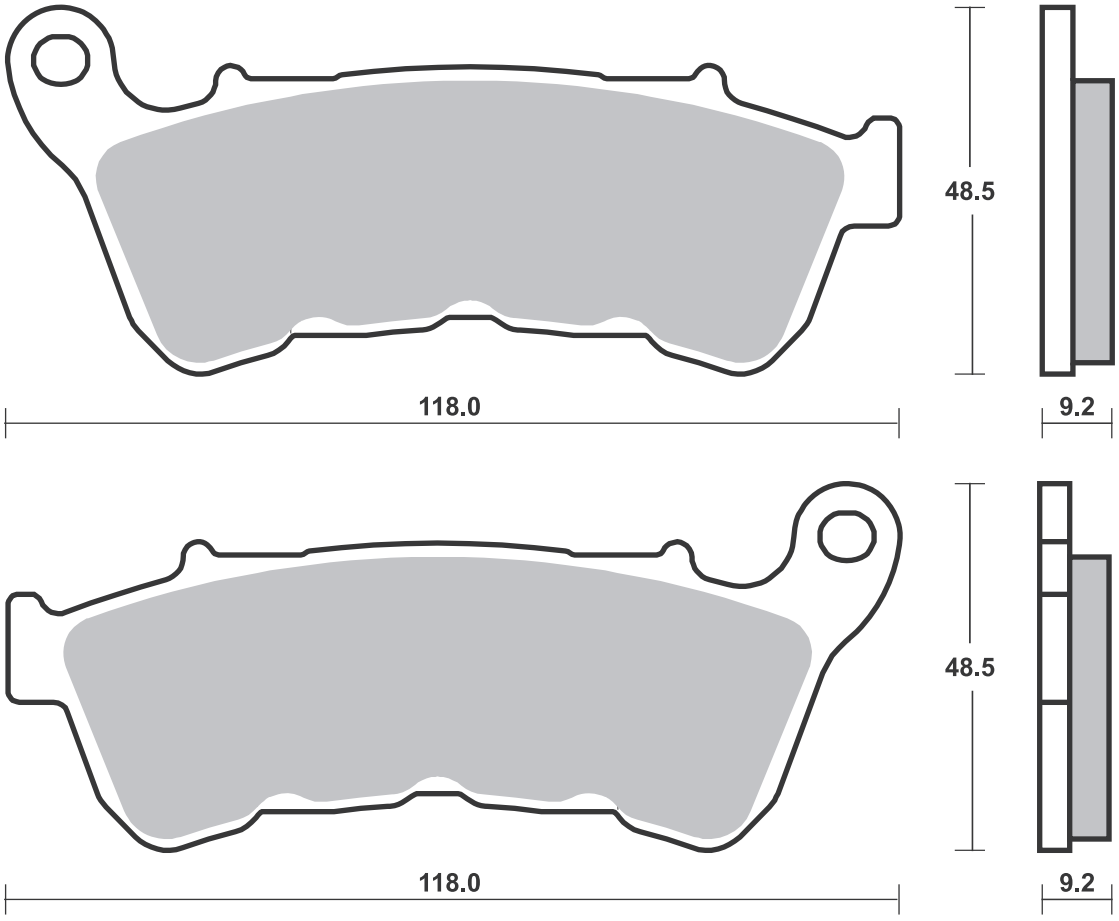

Available compounds **HF • RSI** **SBS 939**

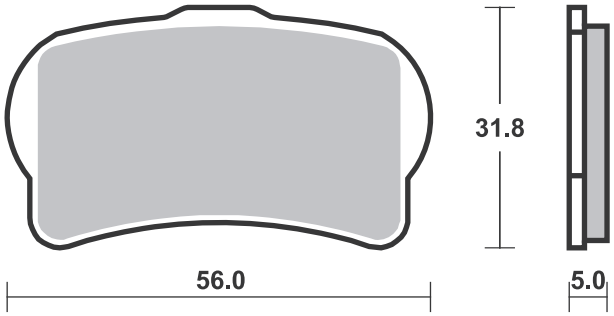

SBS 940 Recommended compound

HONDA					
CB	125	R	18-20	**HS**	
CB	300	R	18-21	**HS**	
CB	300	R Neo Sports Cafe	19-19	**HS**	
CB	650	R Neo Sports Cafe	19-21	**HS**	
CBR	650	R	19-21	**HS**	
CRF	1000	L Africa Twin	16-19	**SP**	
CRF	1000	L Africa Twin Adventure Sports	18-19	**SP**	
CRF	1100	L Africa Twin	20-21	**SP**	
CRF	1100	L Africa Twin Adventure Sports	20-21	**SP**	

SBS 941 Recommended compound

BREMBO RACING CALIPERS
Racing rear X206101, P4 24 (30 mm disc height)
Racing rear X206121, P4 24 (30 mm disc height)
Racing rear X988870, P2 34 (30 mm disc height)
Racing rear XA1J040, P2 30 (30 mm disc height)

SBS 942 Recommended compound

BMW				
	1000	HP4 Race	17-18	**LS**
BREMBO RACING CALIPERS				
Racing rear X206101, P4 24 (24mm disc height)				
Racing rear X206121, P4 24 (24mm disc height)				
Racing rear X988870, P2 34 (24mm disc height)				
Racing rear XA1J040, P2 30 (24mm disc height)				

Available compounds **HS • SP** **SBS 940**

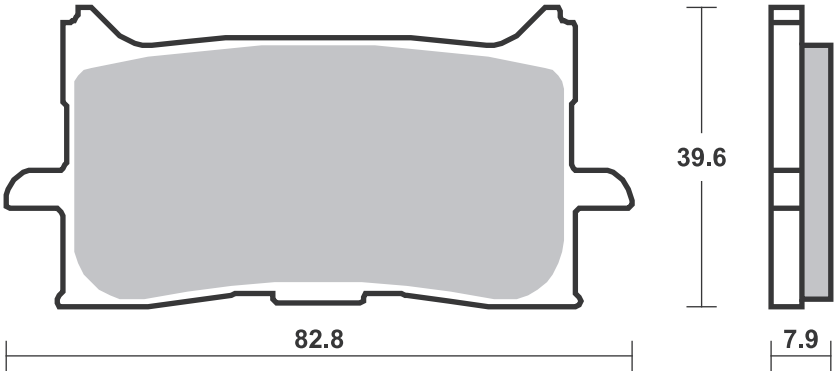

Available compounds **LS • SP • RQ • RSI** **SBS 941**

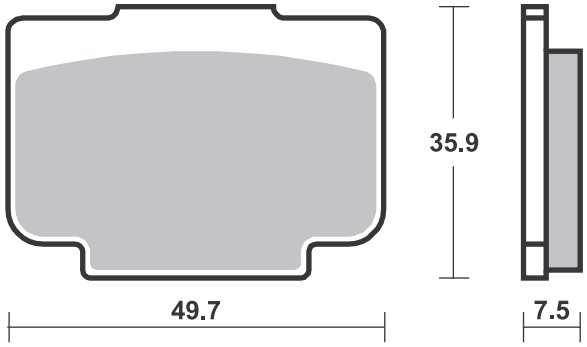

Available compounds **LS • RQ** **SBS 942**

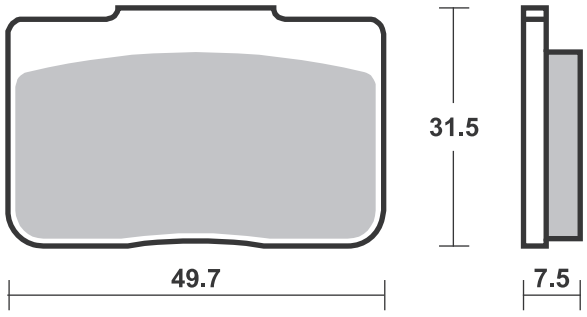

SBS 945 Recommended compound

KYMCO				
	500	MXU	09-14	**SI**
	500	MXU DX	11-13	**SI**
	550	MXU	12-20	**SI**
	700	MXU	13-20	**SI**
UXV	700		14-16	**SI**

SBS 946 Recommended compound

ARCTIC CAT				
	700	Wildcat Sport	15-18	**ATS**
	700	Wildcat Sport LTD.	16-18	**ATS**
	700	Wildcat Sport LTD. EPS	17-18	**ATS**
	700	Wildcat Sport XT	15-18	**ATS**
	700	Wildcat Sport XT EPS	16-18	**ATS**

Available compounds **SI • RSI** **SBS 945**

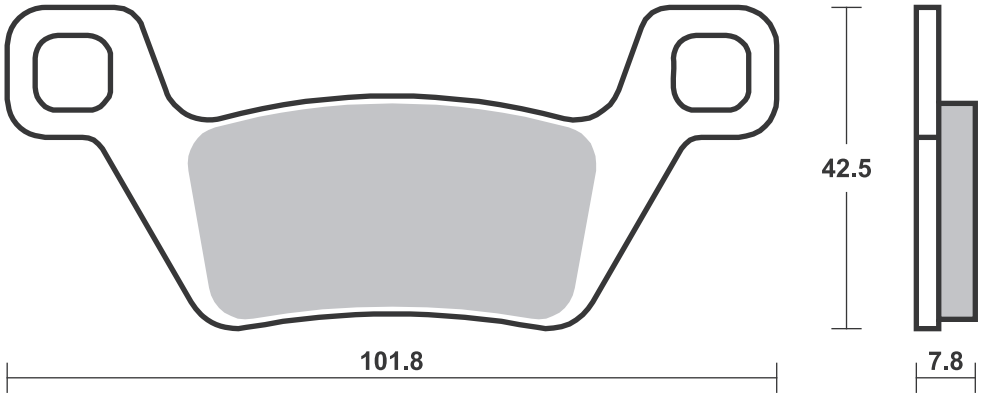

Available compounds **SI • RSI • ATS** **SBS 946**

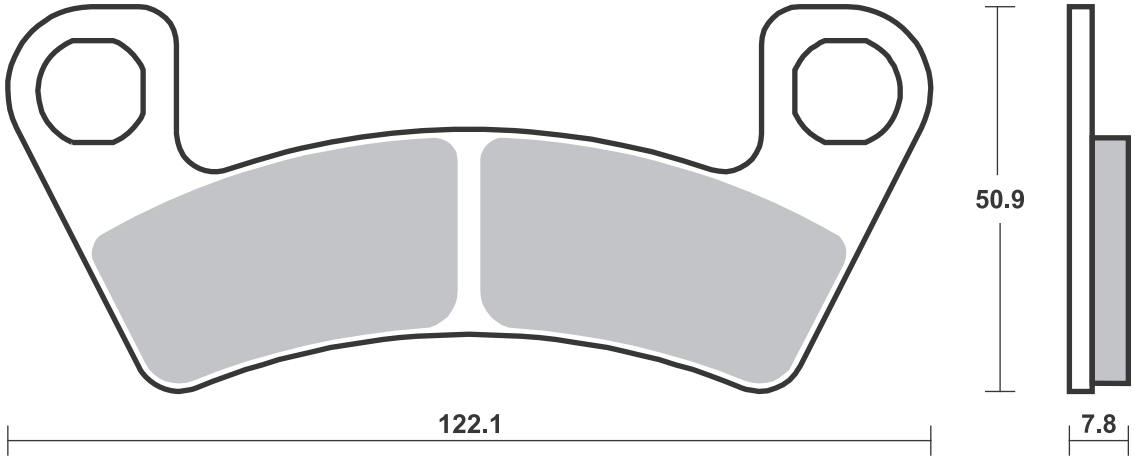

Dimensions in mm / Dimensions en mm • 1” = 25.4 mm , 1 mm = 0.04”

SBS 947 Recommended compound

HONDA					
VFR	800	F	17-19	**HS**	
VFR	800	X Crossrunner	17-18	**HS**	
CB	1000	R	18-21	**HS**	
CB	1000	R+ Neo Sports Cafe	18-18	**HS**	
CBR	1000	RR Fireblade	17-19	**SP**	
CB	1100	RS ABS	17-19	**HS**	

SBS 948 Recommended compound

CAN-AM					
	1330	Spyder F3	15-19		**HS**
	1330	Spyder F3 Limited	16-19		**HS**
	1330	Spyder F3-S	15-19		**HS**
	1330	Spyder F3-T	16-19		**HS**
	1330	Spyder RS	14-16		**HS**
	1330	Spyder RS RSS	13-13		**HS**
	1330	Spyder RSS	14-15		**HS**
	1330	Spyder RSS Special Series	15-15		**HS**
	1330	Spyder RT	14-18		**HS**
	1330	Spyder RT Limited	13-19		**HS**
	1330	Spyder RT RTS	13-13		**HS**
	1330	Spyder RTS	14-15		**HS**
	1330	Spyder RTS Special Series	15-15		**HS**
	1330	Spyder ST	14-16		**HS**
	1330	Spyder ST Limited	13-15		**HS**
	1330	Spyder ST STS	13-13		**HS**
	1330	Spyder STS	14-15		**HS**
	1330	Spyder STS Special Series	15-15		**HS**

Available compounds **HS • SP • DC • RST • DS-1 • DS-2** **SBS 947**

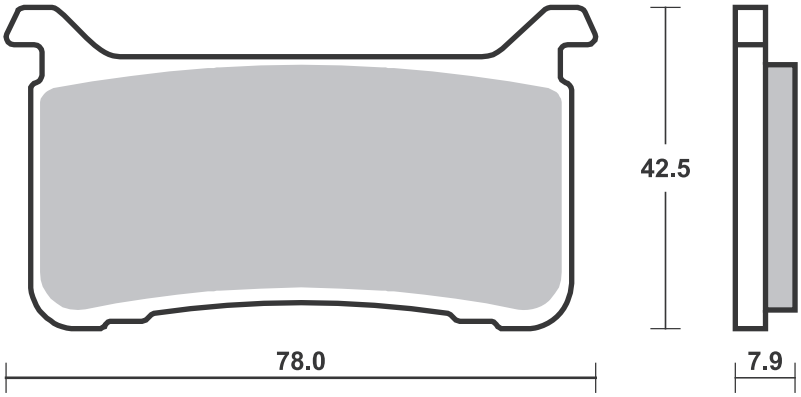

Available compounds **HS** **SBS 948**

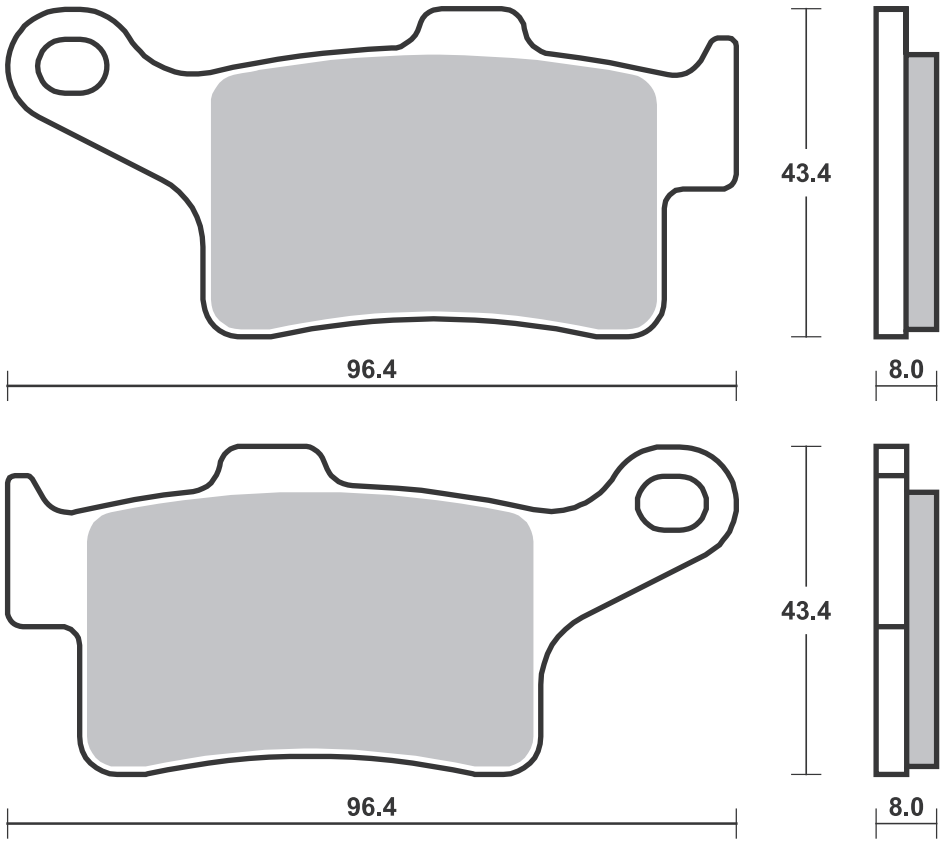

Dimensions in mm / Dimensions en mm • 1” = 25.4 mm , 1 mm = 0.04”

SBS 949 Recommended compound

HARLEY DAVIDSON				
FLDE	1750	Softail Deluxe	18-19	**H.LS**
FLFB	1750	Fat Boy	18-20	**H.LS**
FLHC	1750	Heritage Classic	18-19	**H.LS**
FLHRXS	1750	Road King Special	18-20	**H.LS**
FLSB	1750	Sport Glide	18-20	**H.LS**
FLSL	1750	Softail Slim	18-20	**H.LS**
FXBB	1750	Street Bob	18-20	**H.LS**
FXBR	1750	Breakout	18-19	**H.LS**
FXFB	1750	Fat Bob	18-20	**H.LS**
FXLR	1750	Low Rider	18-20	**H.LS**
FLFBS	1870	Fat Boy	18-19	**H.LS**
FLHCS	1870	Heritage Classic	18-19	**H.LS**
FXBRS	1870	Breakout	18-20	**H.LS**
FXDR	1870		19-20	**H.LS**

SBS 950 Recommended compound

NISSIN
4 Piston Racing Caliper
(510-C00-91N/510-C10-91N)

Available compounds **H.HF • H.CT • H.LS** **SBS 949**

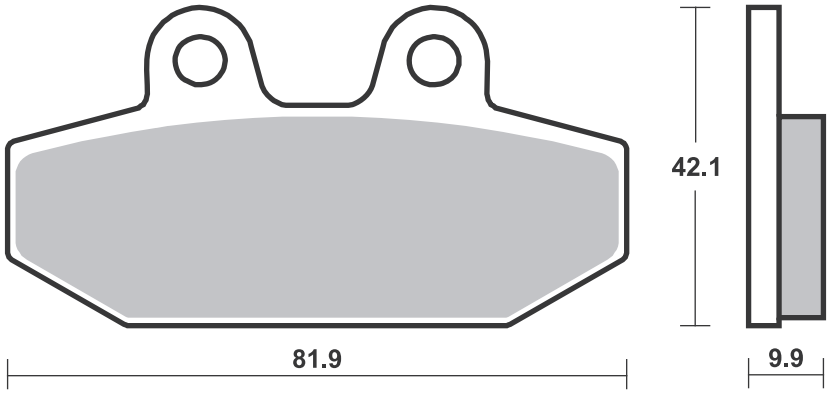

Available compounds **DS-1 • DS-2** **SBS 950**

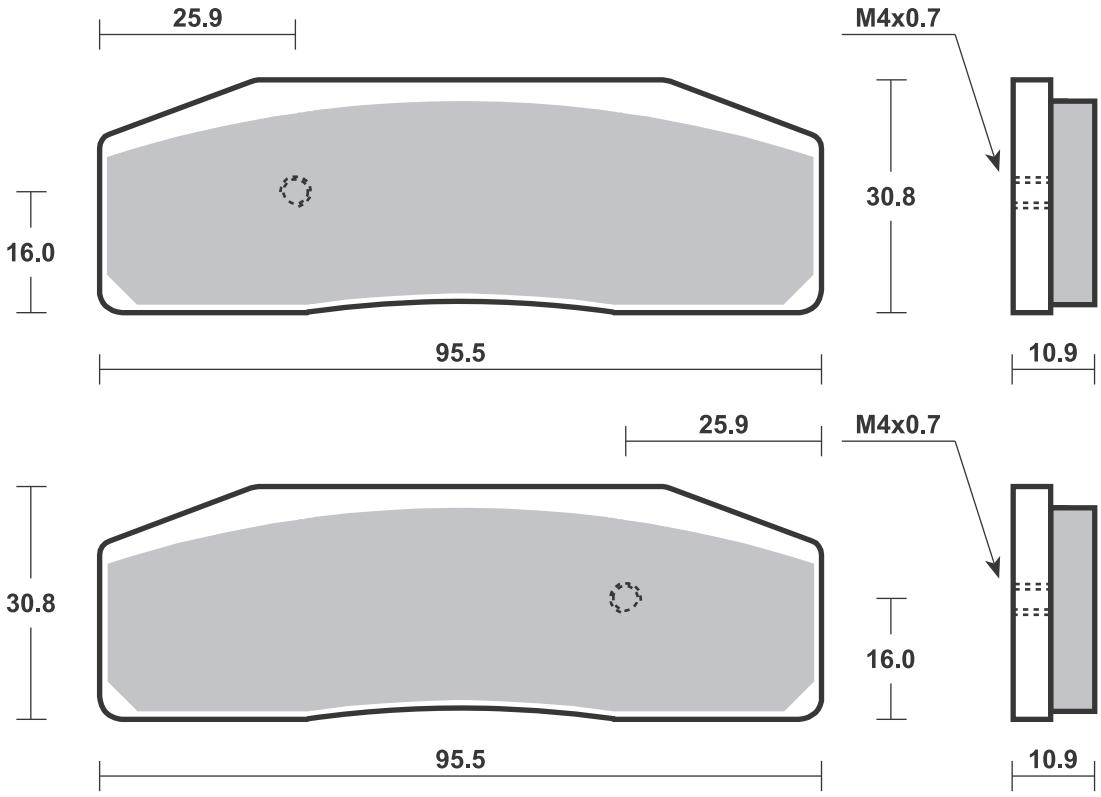

Dimensions in mm / Dimensions en mm • 1” = 25.4 mm , 1 mm = 0.04”

SBS 951 Recommended compound

SUZUKI				
GSX-R	125 RL	17-21	**HF**	
GSX-R	125 RLX	17-21	**HF**	
GSX-S	125 ML	17-19	**HF**	
GSX-S	125 MLX	17-19	**HF**	

SBS 952 Recommended compound

HONDA				
GL	1800 Gold Wing	18-21	**HS**	

Available compounds **HF • HS • RST** **SBS 951**

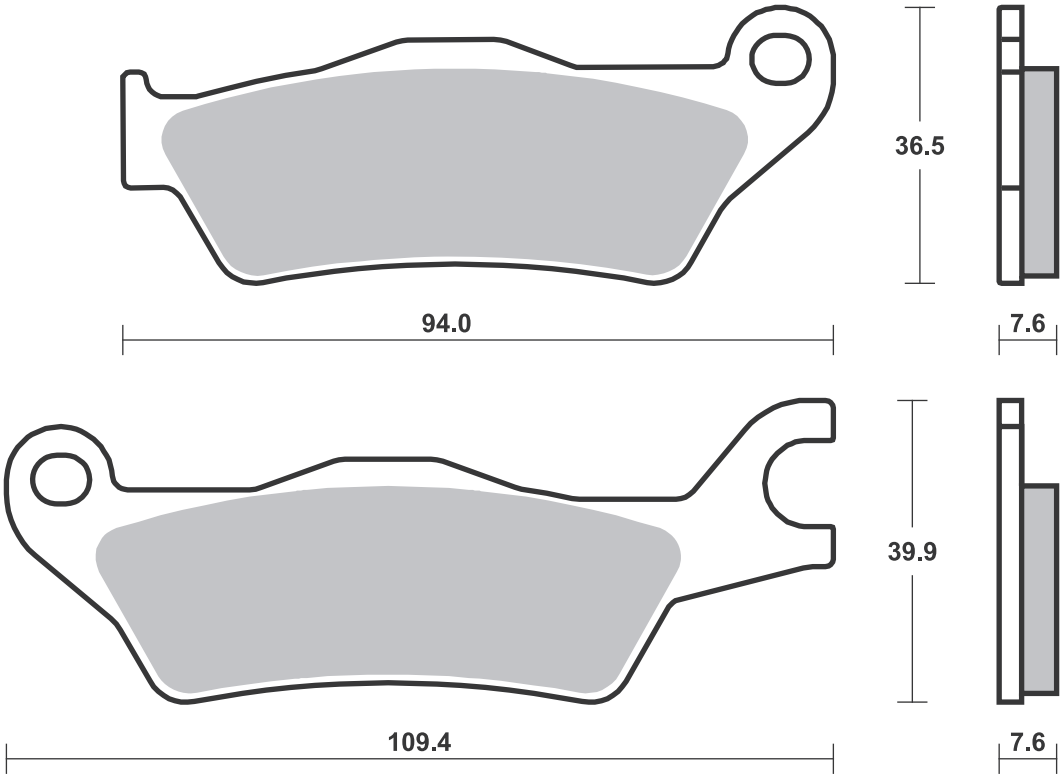

Available compounds **HS • SP** **SBS 952**

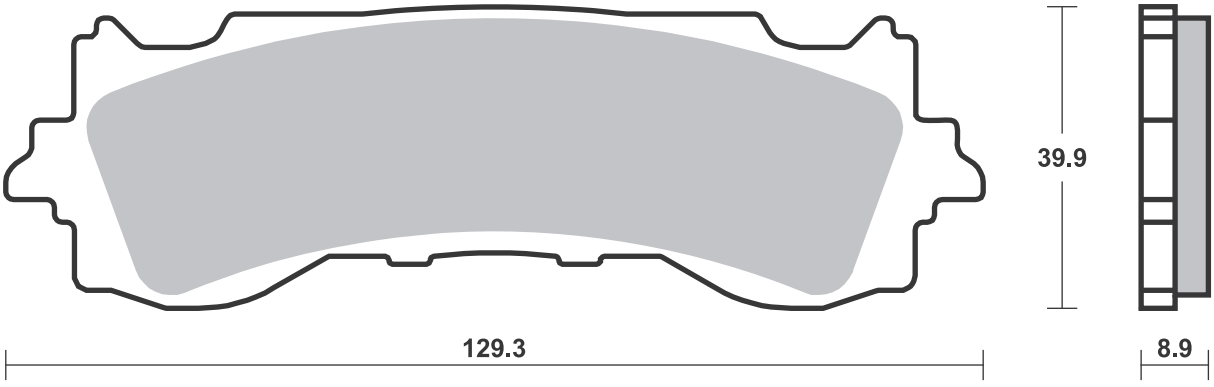

SBS 953 Recommended compound

HONDA				
GL	1800	Gold Wing	18-21	**LS**

Available compounds **LS • SP** **SBS 953**

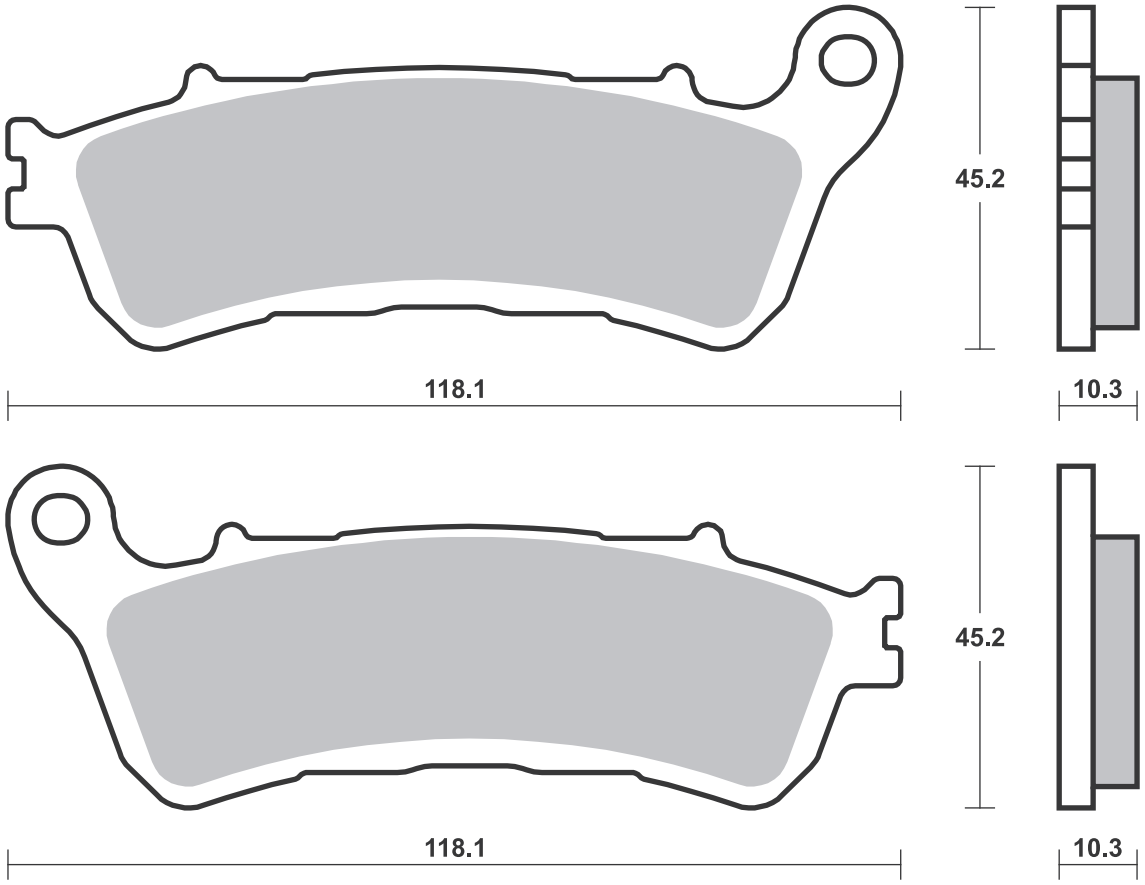

Dimensions in mm / Dimensions en mm • 1” = 25.4 mm , 1 mm = 0.04”

SBS 954 Recommended compound

POLARIS	
925 RZR XP Turbo 16-20 **SI**	
925 RZR XP4 Turbo 16-20 **SI**	

Available compounds **SI • RSI** **SBS 954**

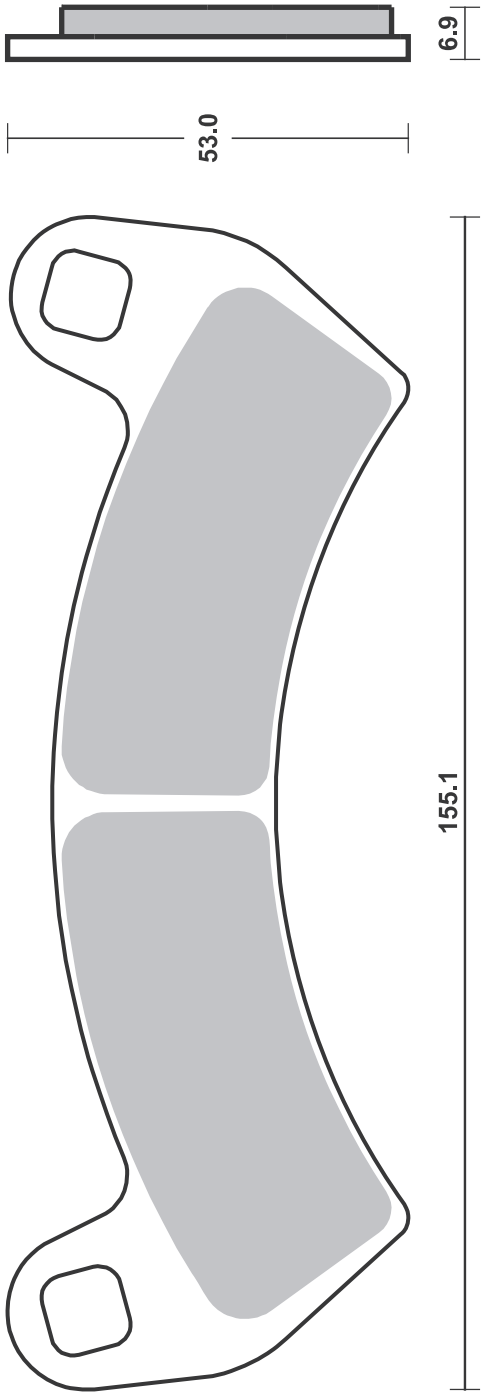

Dimensions in mm / Dimensions en mm • 1” = 25.4 mm , 1 mm = 0.04”

SBS 955 Recommended compound

KAWASAKI				
EX	250	R Ninja	18-20	**HS**
EX	400	Ninja	18-20	**HS**
EX	400	Ninja SE	18-19	**HS**

Available compounds **HS • DC • RST • DS-1 • DS-2** **SBS 955**

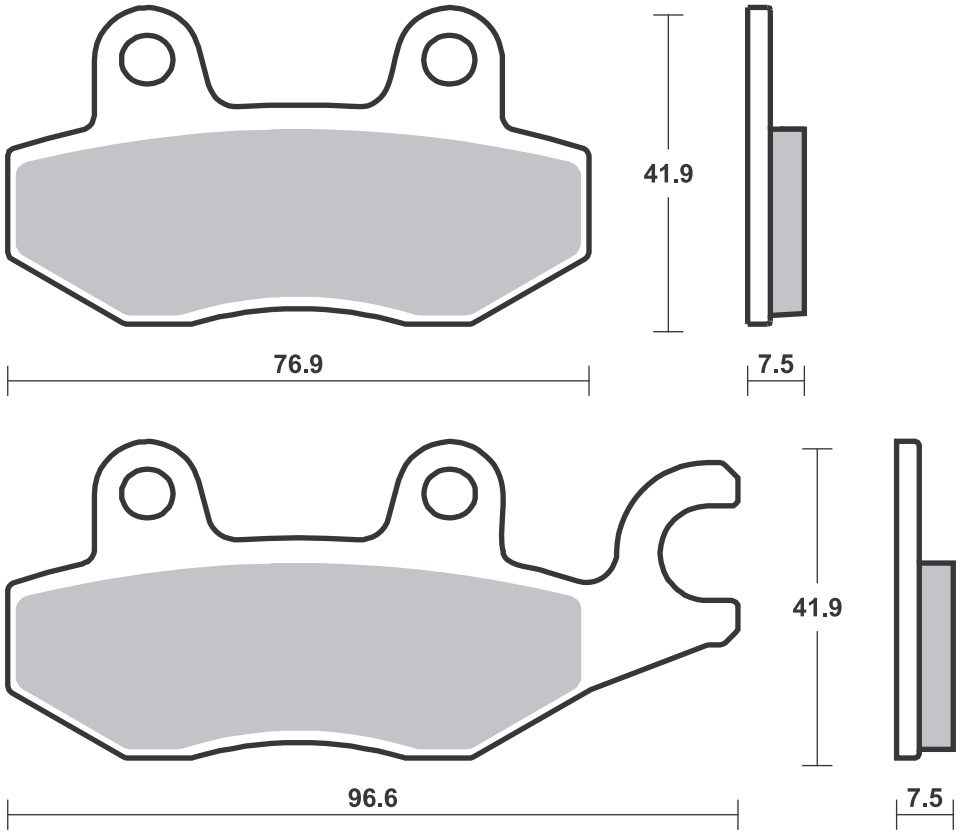

Dimensions in mm / Dimensions en mm • 1” = 25.4 mm , 1 mm = 0.04”

SBS 956 Recommended compound

				
CAN-AM				
900	X3	17 - 19	**PSI**	**PSI**
900	X3 MAX	17 - 19	**PSI**	**PSI**
900	X3 MAX Turbo	18 - 19	**PSI**	**PSI**
900	X3 MAX Turbo R	18 - 19	**PSI**	**PSI**
900	X3 Turbo	18 - 19	**PSI**	**PSI**
900	X3 Turbo R	18 - 19	**PSI**	**PSI**

Available compounds **RSI • PSI** **SBS 956**

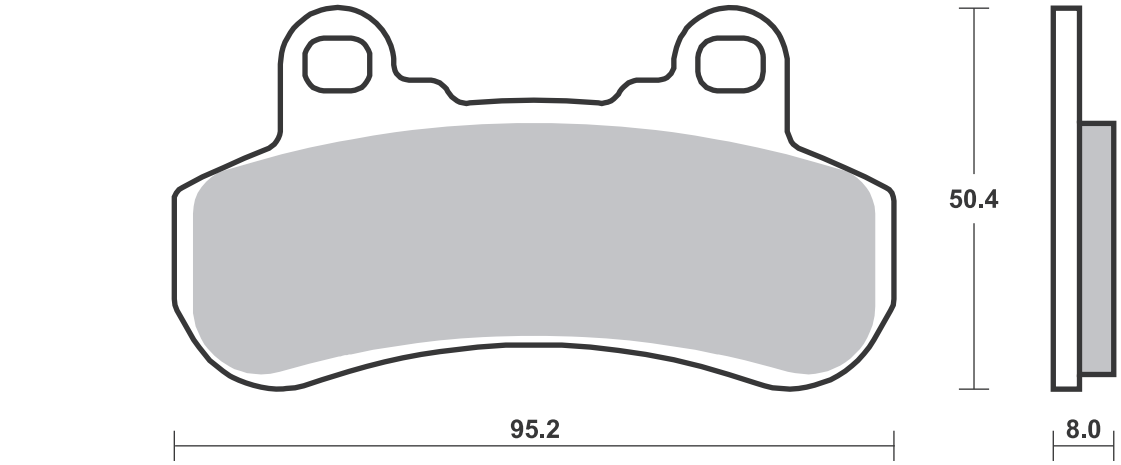

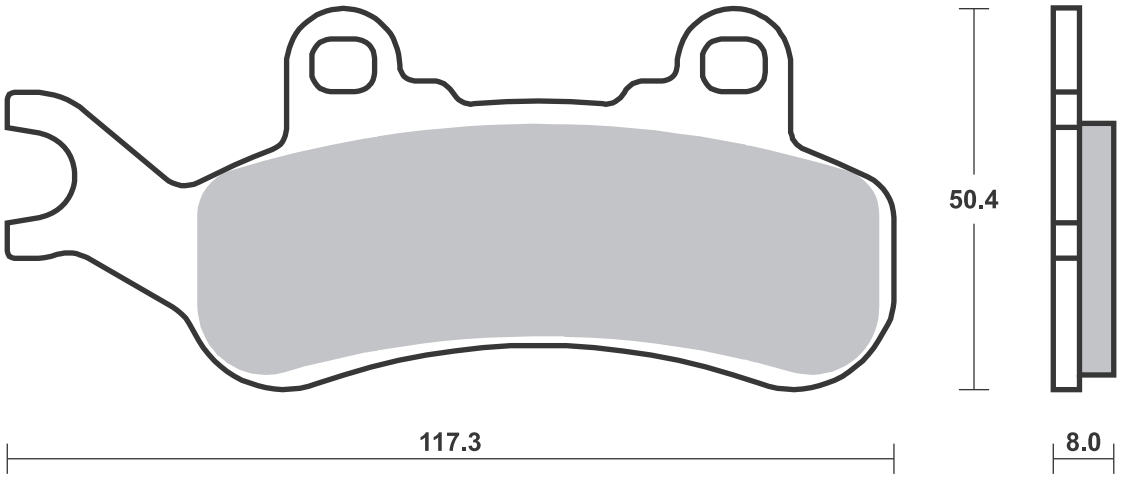

Dimensions in mm / Dimensions en mm • 1” = 25.4 mm , 1 mm = 0.04”

SBS 957 Recommended compound

CAN-AM			
900 X3	17 - 19	**PSI**	**PSI**
900 X3 MAX	17 - 19	**PSI**	**PSI**
900 X3 MAX Turbo	18 - 19	**PSI**	**PSI**
900 X3 MAX Turbo R	18 - 19	**PSI**	**PSI**
900 X3 Turbo	18 - 19	**PSI**	**PSI**
900 X3 Turbo R	18 - 19	**PSI**	**PSI**

SBS 959 Recommended compound

J.JUAN	
Big Brake Kit X3	

Available compounds **RSI • PSI** **SBS 957**

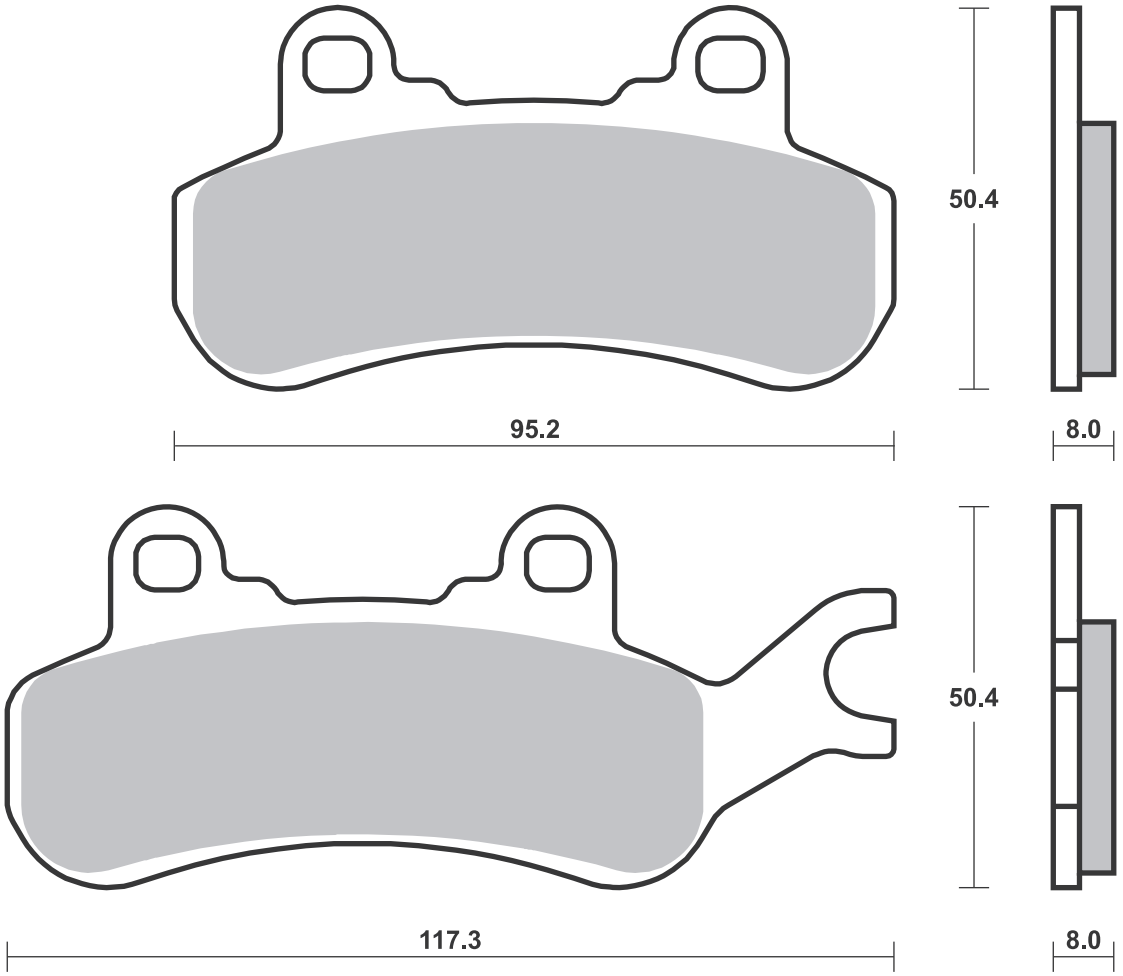

Available compounds **PSI** **SBS 959**

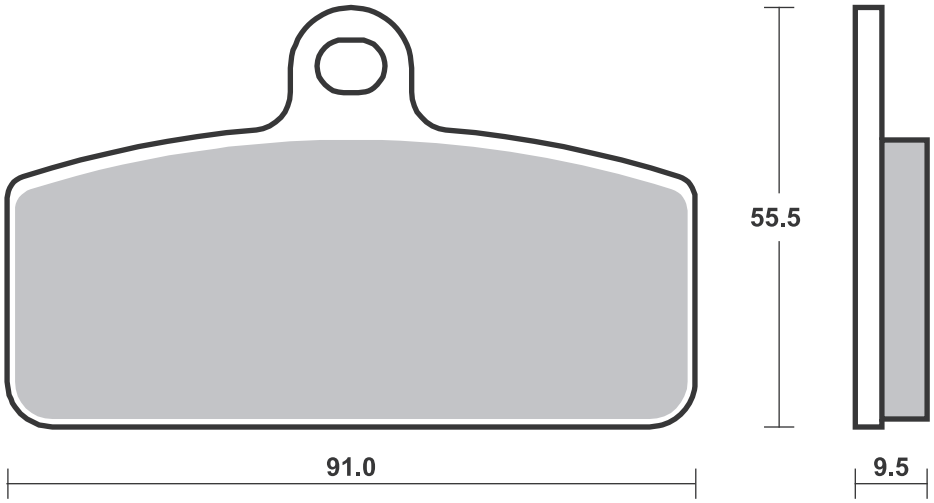

Dimensions in mm / Dimensions en mm • 1” = 25.4 mm , 1 mm = 0.04”

SBS 960 Recommended compound

BMW				
S	1000 RR	19-21	**SP**	
S	1000 XR	20-21	**SP**	
R	1250 GS	19-21	**SP**	
R	1250 GS Adventure	19-21	**SP**	
R	1250 RT	19-21	**SP**	
R	1250 RT Sport	19-20	**SP**	

SBS 961 Recommended compound

KEEWAY				
	125 Superlight	17-19	**HF**	

Available compounds **HS • SP • DC • RST • DS-1 • DS-2** **SBS 960**

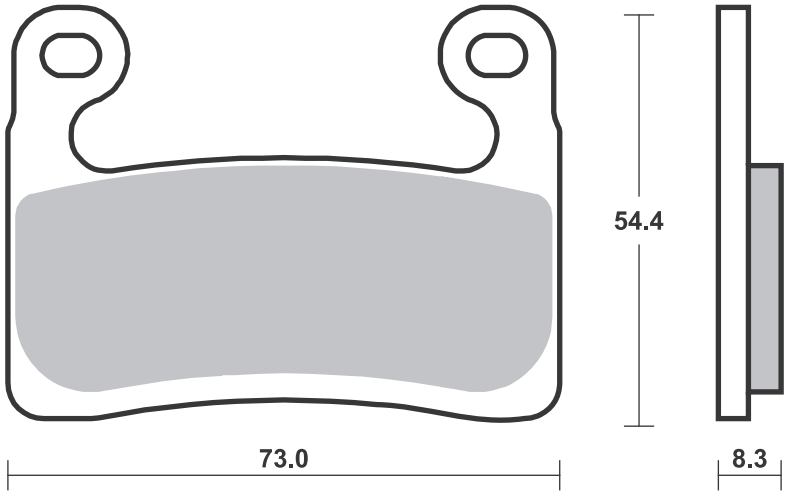

Available compounds **HF** **SBS 961**

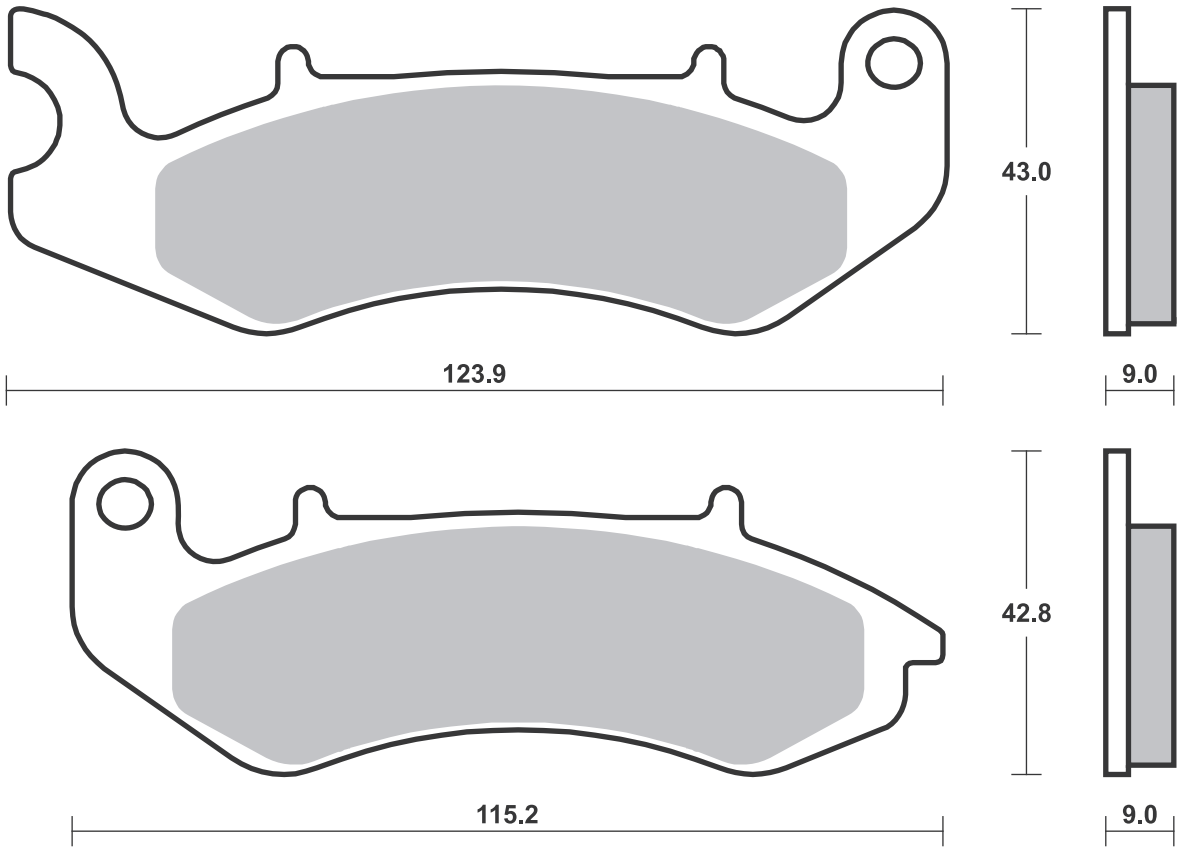

Dimensions in mm / Dimensions en mm • 1” = 25.4 mm , 1 mm = 0.04”

SBS 962 Recommended compound

J.JUAN	
Fixed 2p radial	
caliper 82 mm	

SBS 963 Recommended compound

GAS GAS				
TXT	125 GP	19-20	**RSI**	
TXT	125 Racing	19-21	**RSI**	
TXT	250 GP	19-20	**RSI**	
TXT	250 Racing	19-21	**RSI**	
TXT	280 GP	19-20	**RSI**	
TXT	280 Racing	19-21	**RSI**	
TXT	300 GP	19-20	**RSI**	
TXT	300 Racing	19-21	**RSI**	
TRS				
	125 ONE	19-20	**RSI**	
	125 RR ONE	19-20	**RSI**	
	250 RR ONE	19-20	**RSI**	
	280 RR ONE	19-20	**RSI**	
	300 RR ONE	19-20	**RSI**	

Available compounds **SP • RST** **SBS 962**

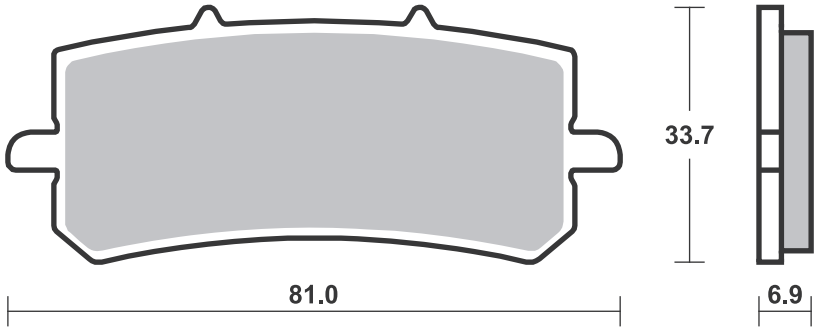

Available compounds **HF • RSI** **SBS 963**

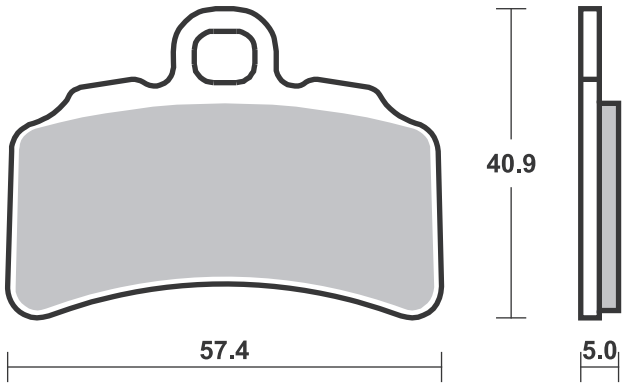

SBS 965 Recommended compound

YAMAHA				
YZ	250 F Efi	21 - 21	**RSI**	
WR	450 F Efi	21 - 21	**SI**	
YZ	450 F	20 - 21	**RSI**	
YZ	450 FX	21 - 21	**SI**	

SBS 966 Recommended compound

YAMAHA				
YZF	600 R6 Quick change / Front wheel	17 - 20	**DS-1**	

Available compounds **SI • RSI** **SBS 965**

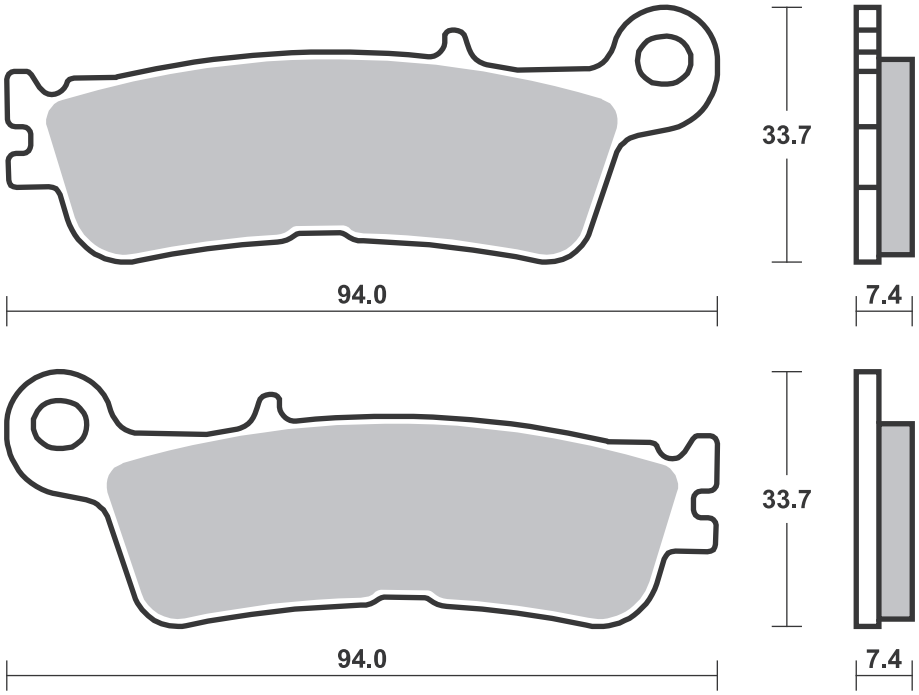

Available compounds **DS-1 • DS-2** **SBS 966**

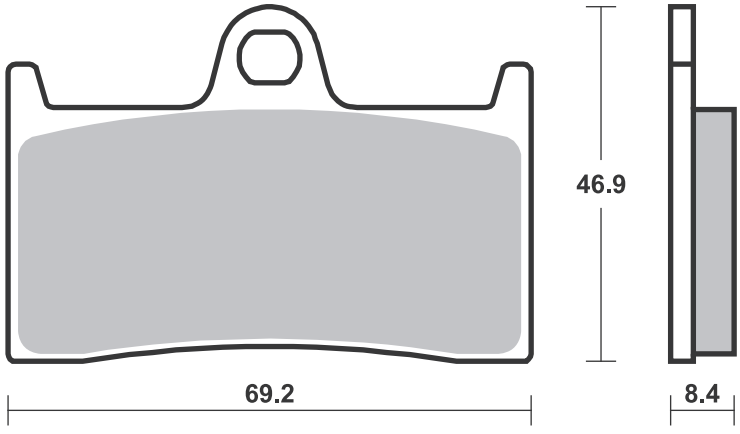

SBS 970 Recommended compound

POLARIS					
RZR	900	50/55/60 Inch	15-20	**PSI**	
RZR-S	900	60 Inch	20-20	**PSI**	
RZR	1000	60 Inch	16-20	**PSI**	
RZR-S	1000	60 Inch	20-20	**PSI**	

SBS 971 Recommended compound

CAN-AM					
	800	Commander MAX R EFI	18-20	**PSI**	
	800	Commander R EFI	18-18	**PSI**	
	1000	Commander	16-17	**PSI**	
	1000	Commander MAX	14-17	**PSI**	
	1000	Commander MAX R EFI	18-19	**PSI**	
	1000	Commander R EFI	18-20	**PSI**	
	1000	Maverick	14-18	**PSI**	
	1000	Maverick MAX	14-18	**PSI**	
YAMAHA					
YXC	700	Viking VI	15-16	**PSI**	
YXC	700	Viking VI EPS	15-21	**PSI**	
YXC	700	Viking VI EPS Special Edition	16-17	**PSI**	
YXE	700	Wolverine	16-18	**PSI**	
YXE	700	Wolverine EPS	17-17	**PSI**	
YXE	700	Wolverine R-Spec	16-16	**PSI**	
YXE	700	Wolverine R-Spec EPS	16-18	**PSI**	
YXE	700	Wolverine R-Spec EPS SE	16-16	**PSI**	

YAMAHA					
YXE	700	Wolverine R-Spec EPS Special Edition	17-17	**PSI**	
YXM	700	Viking	14-20	**PSI**	
YXM	700	Viking EPS	14-21	**PSI**	
YXM	700	Viking EPS SE	14-17	**PSI**	
YXM	700	Viking EPS Special E	19-19	**PSI**	
YXM	700	Viking EPS Special Edition	16-16	**PSI**	
YXE	850	Wolverine X2	19-19	**PSI**	
YXE	850	Wolverine X2 EPS	20-20	**PSI**	
YXE	850	Wolverine X2 R-Spec	19-20	**PSI**	
YXE	850	Wolverine X2 XTR	20-20	**PSI**	
YXF	850	Wolverine X4	18-20	**PSI**	
YXF	850	Wolverine X4 SE	19-19	**PSI**	
YXF	850	Wolverine X4 Special	19-19	**PSI**	
YXF	850	Wolverine X4 Special Edition	18-18	**PSI**	
YXF	850	Wolverine X4 XTR	20-20	**PSI**	

Available compounds **SI • RSI • PSI** **SBS 970**

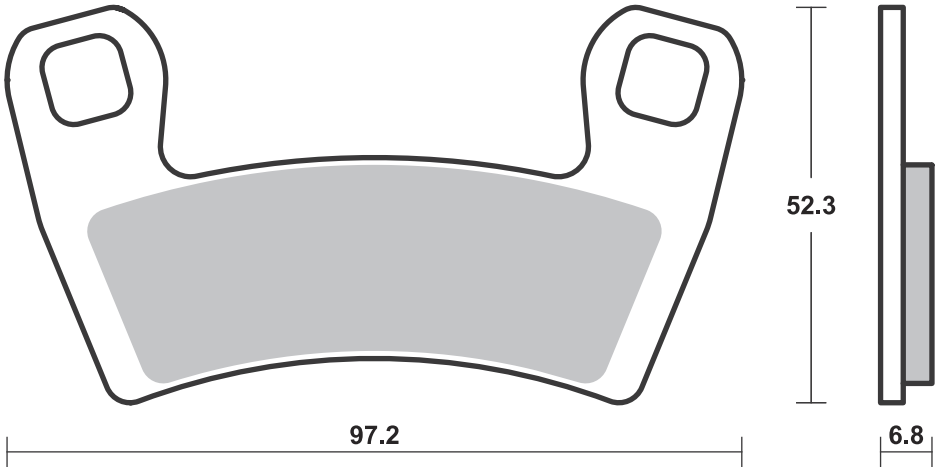

Available compounds **SI • RSI • PSI** **SBS 971**

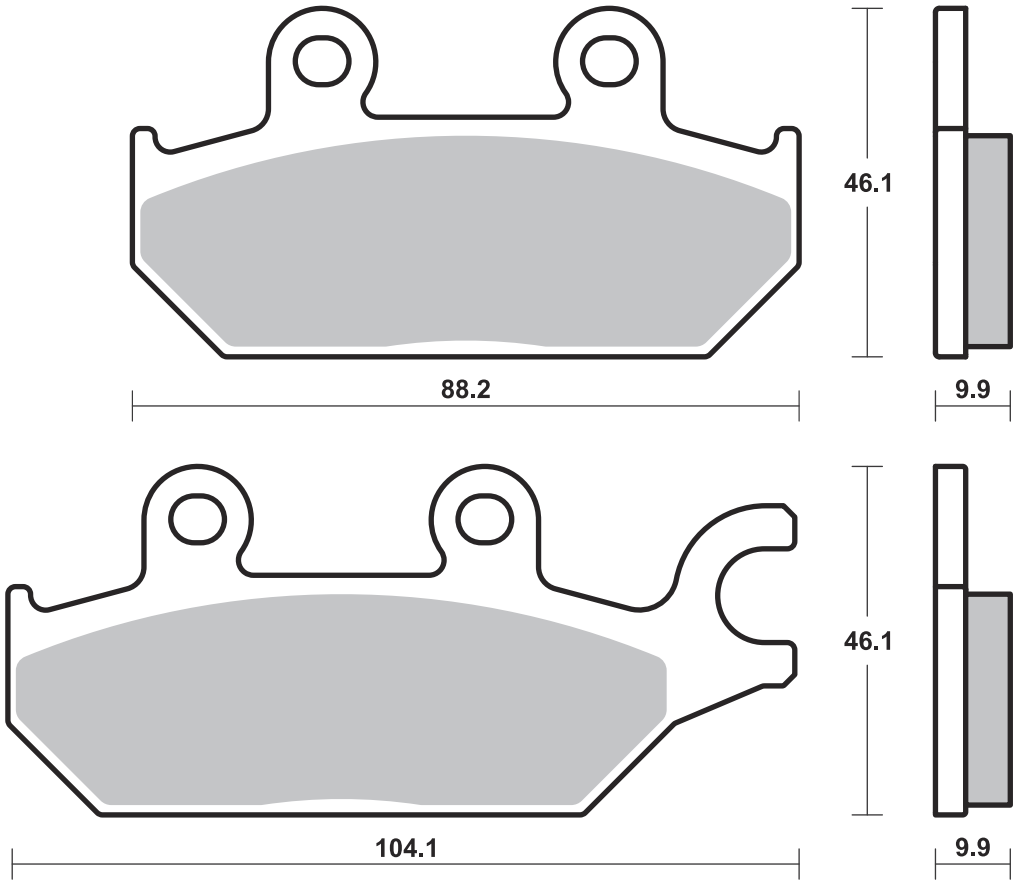

Dimensions in mm / Dimensions en mm • 1” = 25.4 mm , 1 mm = 0.04”

SBS 972 Recommended compound

CAN-AM					
	800	Commander			
		MAX R EFI	18-20	**PSI**	
	800	Commander			
		R EFI	18-18	**PSI**	
	1000	Commander	16-17	**PSI**	
	1000	Commander			
		MAX	14-17	**PSI**	
	1000	Commander			
		MAX R EFI	18-19	**PSI**	
	1000	Commander			
		R EFI	18-20	**PSI**	
	1000	Maverick	14-18	**PSI**	
	1000	Maverick MAX	14-18	**PSI**	
YAMAHA					
YXC	700	Viking VI	15-16	**PSI**	
YXC	700	Viking VI EPS	15-21	**PSI**	
YXC	700	Viking VI EPS			
		Special Edition	16-17	**PSI**	
YXE	700	Wolverine	16-18	**PSI**	
YXE	700	Wolverine EPS	17-17	**PSI**	
YXE	700	Wolverine			
		R-Spec	16-16	**PSI**	
YXE	700	Wolverine			
		R-Spec EPS	16-18	**PSI**	
YXE	700	Wolverine			
		R-Spec EPS			
		SE	16-16	**PSI**	
YAMAHA					
YXE	700	Wolverine			
		R-Spec EPS			
		Special Edition	17-17	**PSI**	
YXM	700	Viking	14-20	**PSI**	
YXM	700	Viking EPS	14-21	**PSI**	
YXM	700	Viking EPS SE	14-17	**PSI**	
YXM	700	Viking EPS			
		Special E	19-19	**PSI**	
YXM	700	Viking EPS			
		Special Edition	16-16	**PSI**	
YXE	850	Wolverine X2	19-19	**PSI**	
YXE	850	Wolverine X2			
		EPS	20-20	**PSI**	
YXE	850	Wolverine X2			
		R-Spec	19-20	**PSI**	
YXE	850	Wolverine X2			
		XTR	20-20	**PSI**	
YXF	850	Wolverine X4	18-20	**PSI**	
YXF	850	Wolverine X4			
		SE	19-19	**PSI**	
YXF	850	Wolverine X4			
		Special	19-19	**PSI**	
YXF	850	Wolverine X4			
		Special Edition	18-18	**PSI**	
YXF	850	Wolverine X4			
		XTR	20-20	**PSI**	

SBS 973 Recommended compound

YAMAHA					
YXC	700	Viking VI	15-16		**PSI**
YXC	700	Viking VI EPS	15-21		**PSI**
YXC	700	Viking VI EPS			
		Special Edition	16-17		**PSI**
YXE	700	Wolverine	16-18		**PSI**
YXE	700	Wolverine EPS	17-17		**PSI**
YXE	700	Wolverine			
		R-Spec	16-16		**PSI**
YXE	700	Wolverine			
		R-Spec EPS	16-18		**PSI**
YXE	700	Wolverine			
		R-Spec EPS			
		SE	16-16		**PSI**
YXE	700	Wolverine			
		R-Spec EPS			
		Special Edition	17-17		**PSI**
YXM	700	Viking	14-20		**PSI**
YXM	700	Viking EPS	14-21		**PSI**
YXM	700	Viking EPS SE	14-17		**PSI**
YXM	700	Viking EPS			
		Special E	19-19		**PSI**
YXM	700	Viking EPS			
		Special Edition	16-16		**PSI**
YXE	850	Wolverine X2	19-19		**PSI**
YXE	850	Wolverine X2			
		EPS	20-20		**PSI**
YXE	850	Wolverine X2			
		R-Spec	19-20		**PSI**
YAMAHA					
YXE	850	Wolverine X2			
		XTR	20-20		**PSI**
YXF	850	Wolverine X4	18-20		**PSI**
YXF	850	Wolverine X4			
		SE	19-19		**PSI**
YXF	850	Wolverine X4			
		Special	19-19		**PSI**
YXF	850	Wolverine X4			
		Special Edition	18-18		**PSI**
YXF	850	Wolverine X4			
		XTR	20-20		**PSI**

Available compounds **SI • RSI • PSI** **SBS 972**

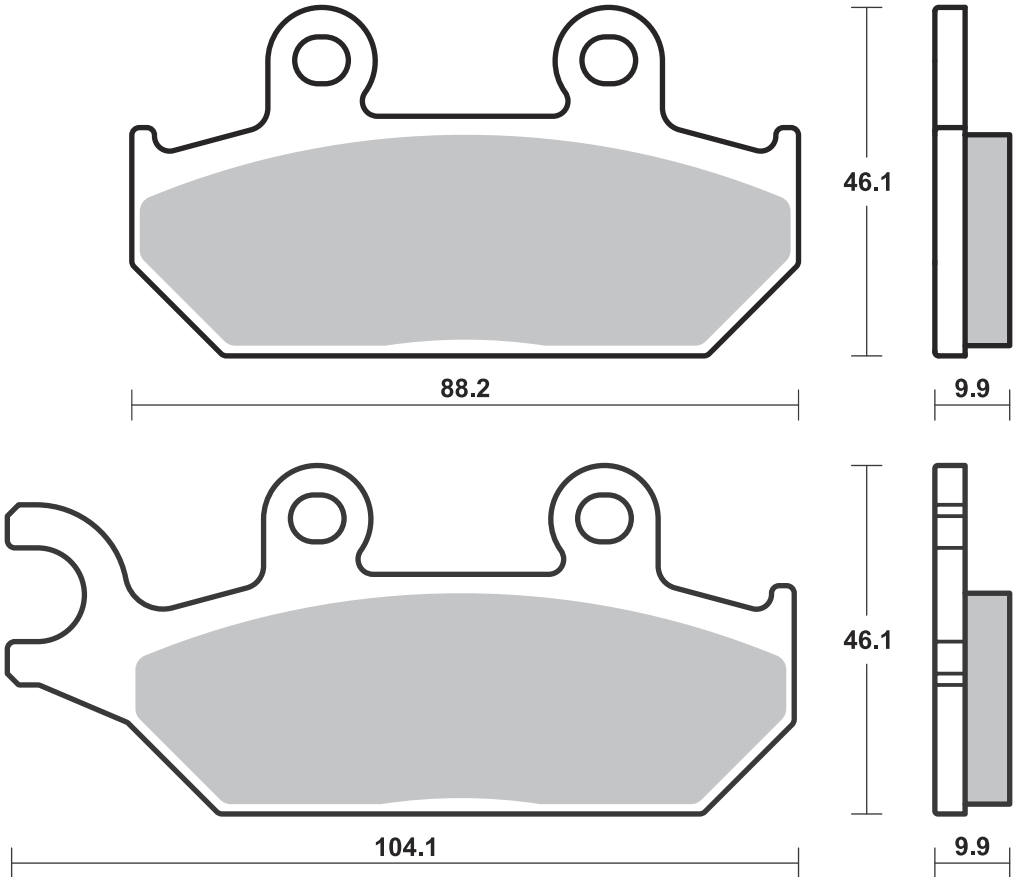

Available compounds **SI • RSI • PSI** **SBS 973**

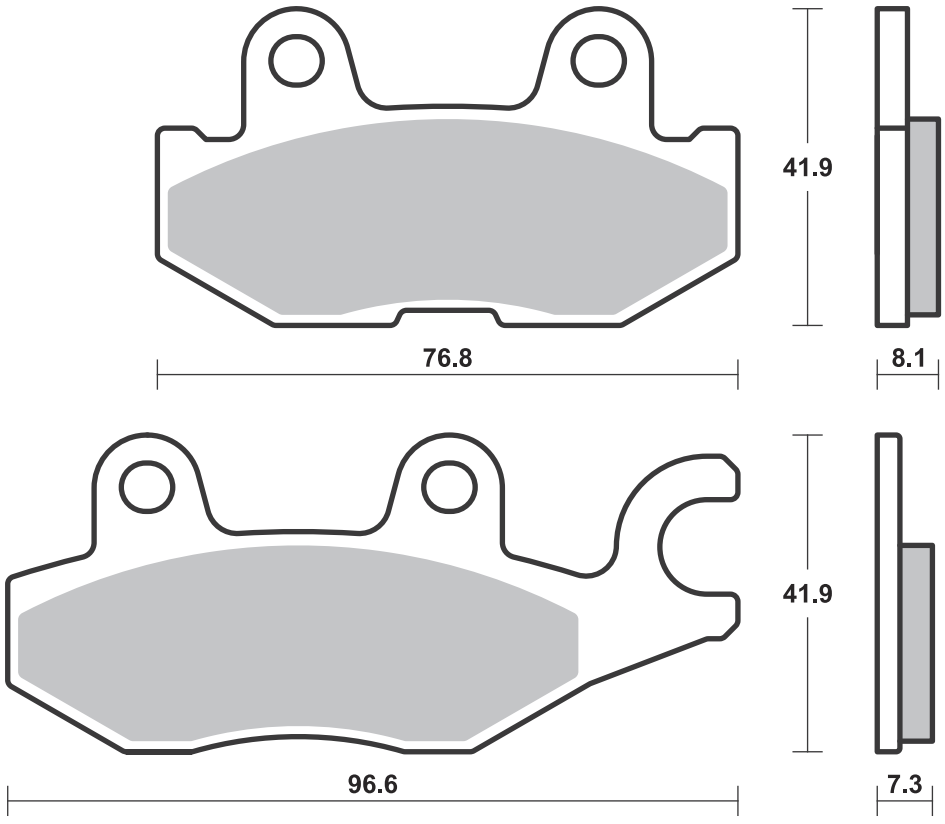

Dimensions in mm / Dimensions en mm • 1” = 25.4 mm , 1 mm = 0.04”

SBS 974 Recommended compound

YAMAHA					
YXC	700	Viking VI	15-16		**PSI**
YXC	700	Viking VI EPS	15-21		**PSI**
YXC	700	Viking VI EPS Special Edition	16-17		**PSI**
YXE	700	Wolverine	16-18		**PSI**
YXE	700	Wolverine EPS	17-17		**PSI**
YXE	700	Wolverine R-Spec	16-16		**PSI**
YXE	700	Wolverine R-Spec EPS	16-18		**PSI**
YXE	700	Wolverine SE	16-16		**PSI**
YXE	700	Wolverine R-Spec EPS Special Edition	17-17		**PSI**
YXM	700	Viking	14-20		**PSI**
YXM	700	Viking EPS	14-21		**PSI**
YXM	700	Viking EPS SE	14-17		**PSI**
YXM	700	Viking EPS Special E	19-19		**PSI**
YXM	700	Viking EPS Special Edition	16-16		**PSI**
YXE	850	Wolverine X2	19-19		**PSI**
YXE	850	Wolverine X2 EPS	20-20		**PSI**
YXE	850	Wolverine X2 R-Spec	19-20		**PSI**
YXE	850	Wolverine X2 XTR	20-20		**PSI**

YAMAHA					
YXF	850	Wolverine X4	18-20		**PSI**
YXF	850	Wolverine X4 SE	19-19		**PSI**
YXF	850	Wolverine X4 Special	19-19		**PSI**
YXF	850	Wolverine X4 Special Edition	18-18		**PSI**
YXF	850	Wolverine X4 XTR	20-20		**PSI**

SBS 975 Recommended compound

HONDA					
	1000	Pioneer	16-21		**PSI**
	1000	Talon	21-21		**PSI**
	1000	Talon R	19-21		**PSI**
	1000	Talon X	19-21		**PSI**
	1000	Talon X-4	20-20		**PSI**

Available compounds **SI • RSI • PSI** **SBS 974**

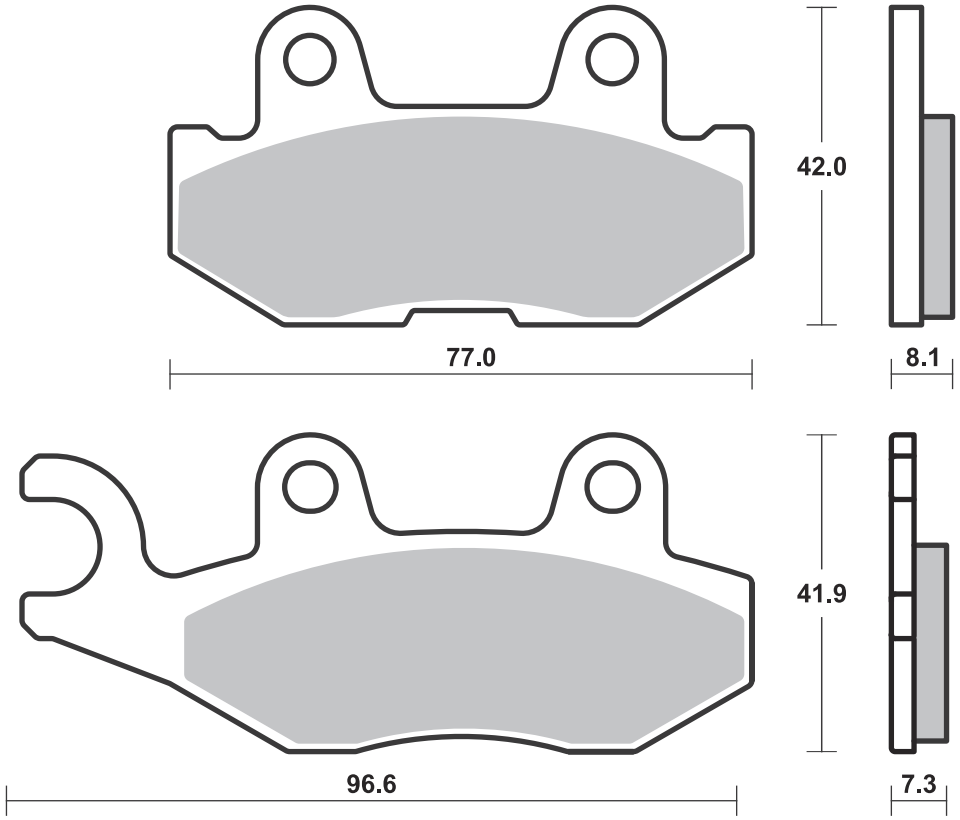

Available compounds **SI • RSI • PSI** **SBS 975**

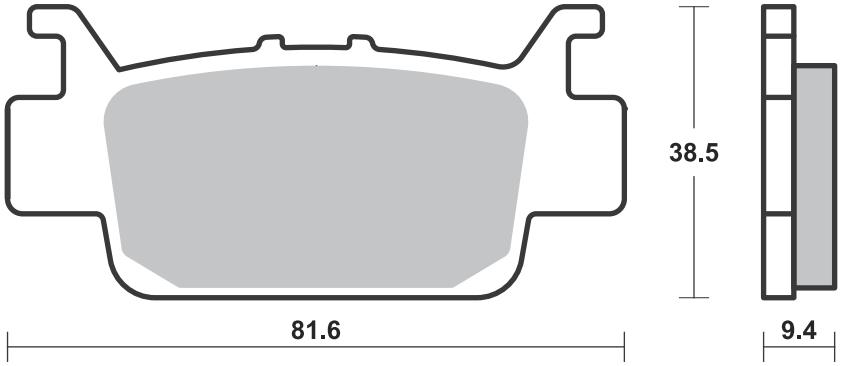

SBS 976 Recommended compound

HONDA		
500 Pioneer	15-20	**PSI**
700 Pioneer	14-21	**PSI**

SBS 977 Recommended compound

POLARIS		
925 RZR XP4 Turbo S	19-20	**SI**
925 RZR XP4 Turbo S Velocity	19-20	**SI**

SBS 978 Recommended compound

POLARIS		
925 RZR XP Turbo	20-20	**SI**
925 RZR XP4 Turbo	20-20	**SI**

Available compounds **SI • RSI • PSI** **SBS 976**

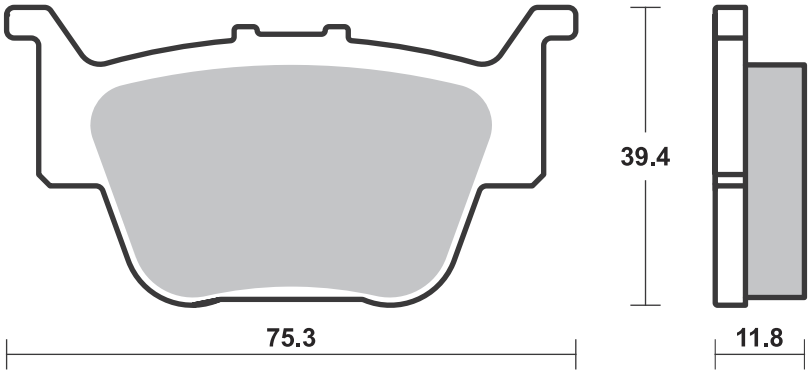

Available compounds **SI • RSI** **SBS 977**

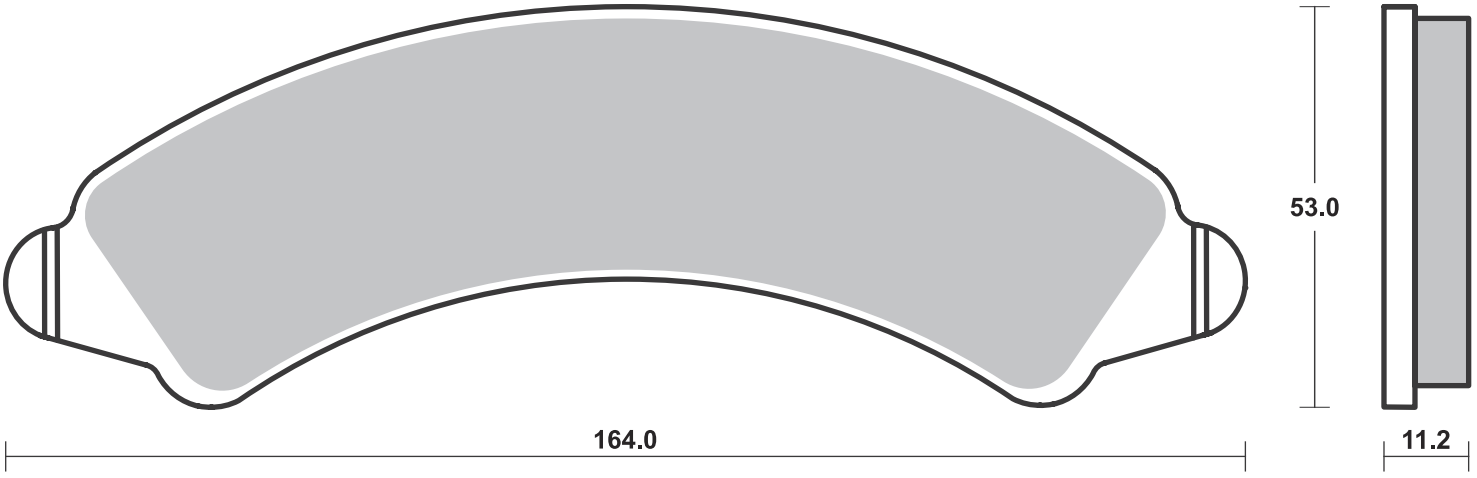

Available compounds **SI • RSI • PSI** **SBS 978**

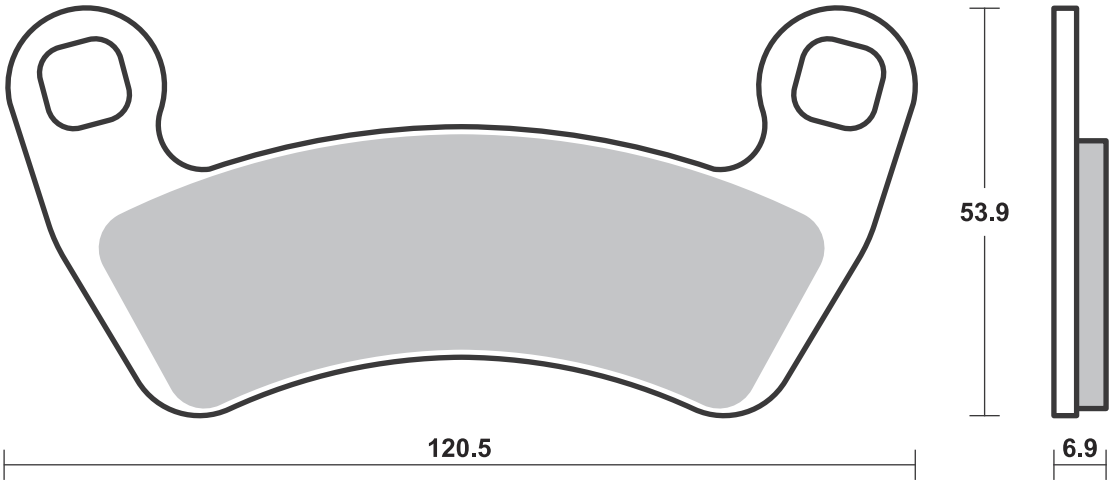

Dimensions in mm / Dimensions en mm • 1” = 25.4 mm , 1 mm = 0.04”

SBS 979 Recommended compound

YAMAHA					
	1000	Wolverine RMAX 4	21-21	**PSI**	
	1000	Wolverine RMAX 4 LE	21-21	**PSI**	
	1000	Wolverine RMAX 4 SE	21-21	**PSI**	
YXE	1000		21-21	**PSI**	
YXZ	1000	EPS	16-20	**PSI**	
YXZ	1000	EPS SE	17-19	**PSI**	
YXZ	1000	EPS Special	20-20	**PSI**	
YXZ	1000	EPS Special Edition	16-17	**PSI**	
YXZ	1000	EPS SS	17-20	**PSI**	
YXZ	1000	SS Special	20-20	**PSI**	
YXZ	1000	SS XTR	20-20	**PSI**	

SBS 980 Recommended compound

YAMAHA					
	1000	Wolverine RMAX 4	21-21		**PSI**
	1000	Wolverine RMAX 4 LE	21-21		**PSI**
	1000	Wolverine RMAX 4 SE	21-21		**PSI**
YXE	1000		21-21		**PSI**
YXZ	1000	EPS	16-20		**PSI**
YXZ	1000	EPS SE	17-19		**PSI**
YXZ	1000	EPS Special	20-20		**PSI**
YXZ	1000	EPS Special Edition	16-17		**PSI**
YXZ	1000	EPS SS	17-20		**PSI**
YXZ	1000	SS Special	20-20		**PSI**
YXZ	1000	SS XTR	20-20		**PSI**

SBS 981 Recommended compound

HONDA					
	1000	Pioneer	16-21	**PSI**	
	1000	Talon	21-21	**PSI**	
	1000	Talon R	19-21	**PSI**	
	1000	Talon X	19-21	**PSI**	
	1000	Talon X-4	20-20	**PSI**	

Available compounds **SI • RSI • PSI** **SBS 979**

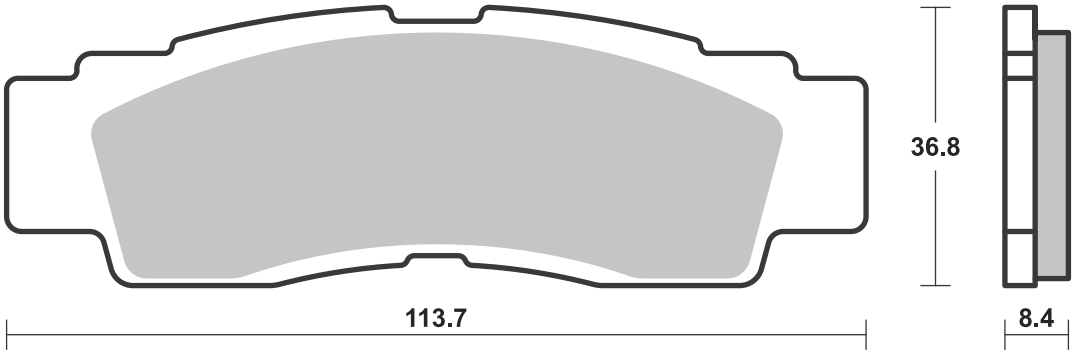

Available compounds **SI • RSI • PSI** **SBS 980**

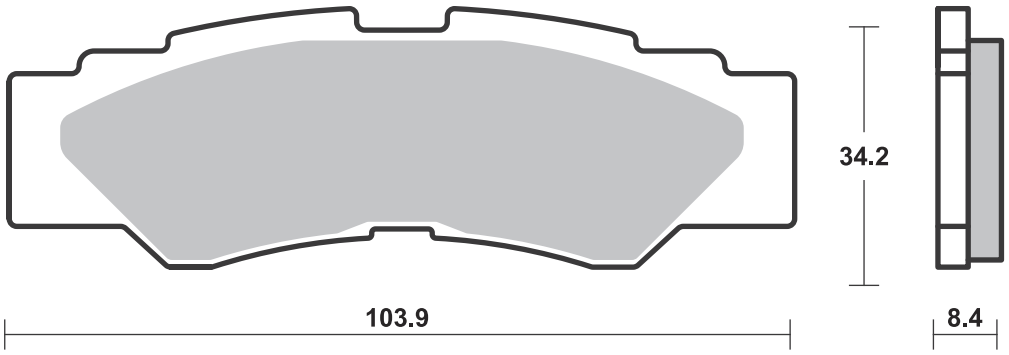

Available compounds **SI • RSI • PSI** **SBS 981**

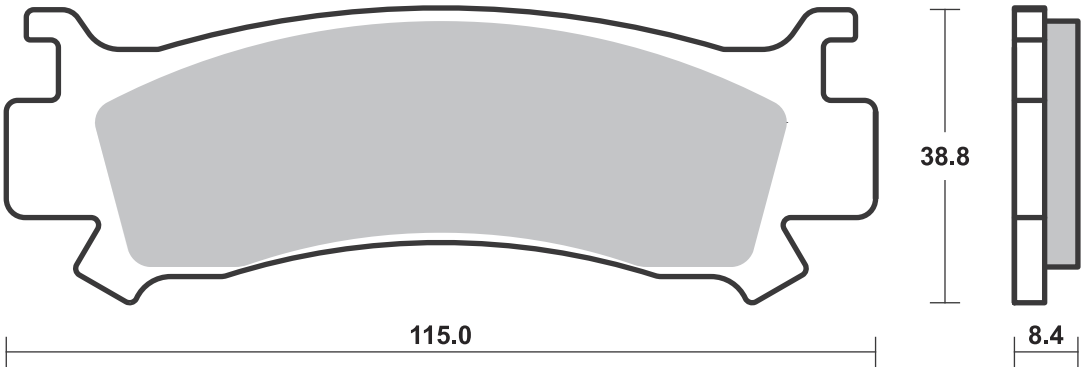

SBS 982 Recommended compound

HONDA				
	500 Pioneer	15-20	**PSI**	
	700 Pioneer	14-21	**PSI**	

SBS 984 Recommended compound

BMW				
M	1000 RR	21-21		**LS**

SBS 985 Recommended compound

BMW				
M	1000 RR	21-21	**SP**	
HONDA				
CBR	1000 RR-R			
	Fireblade	20-21	**SP**	

Available compounds **SI • RSI • PSI** **SBS 982**

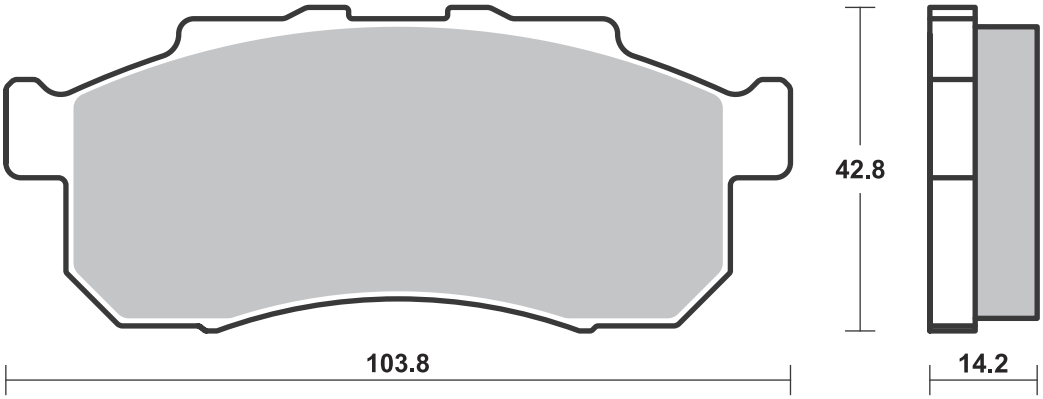

Available compounds **LS • RQ** **SBS 984**

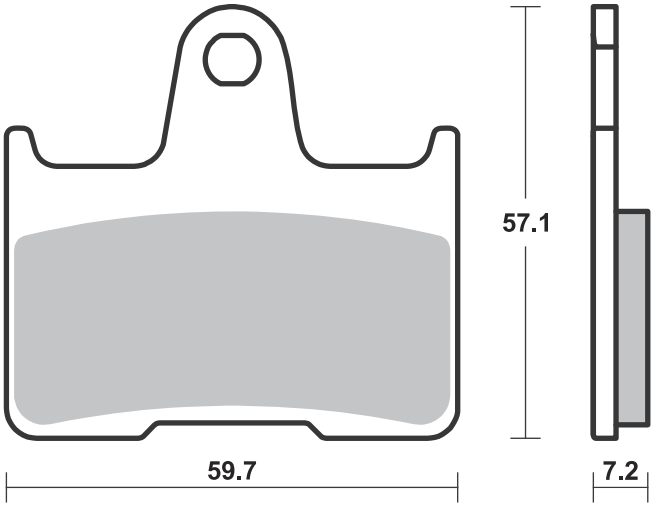

Available compounds **HS • SP • DC • RST • DS-1 • DS-2** **SBS 985**

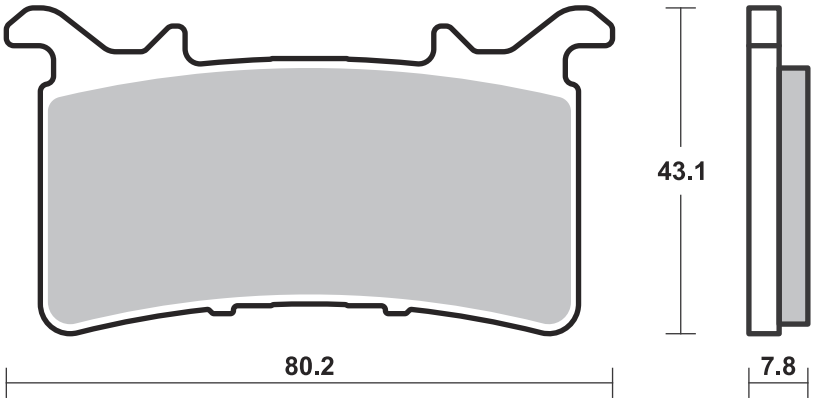

Dimensions in mm / Dimensions en mm • 1” = 25.4 mm , 1 mm = 0.04”

NEW! Get the brake feel you want!

sbs
GO AHEAD

Find the right brake pad compound for you and your bike with the new Compound Selector at sbsbrakes.com

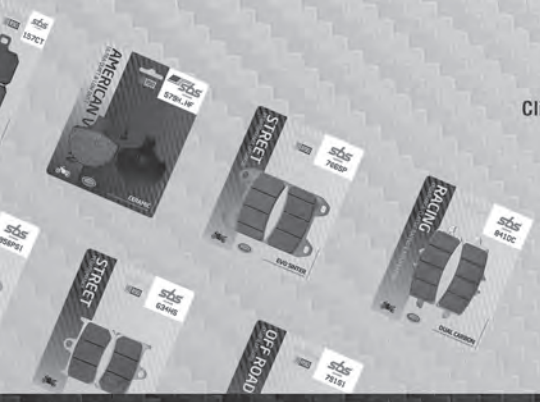

Find the right compound for you and your bike

Click Start Now, answer 2-3 questions and get the answer right away

START NOW





@sbsbrakes | sbsbrakes.com

HI-TECH BRAKE SOLUTIONS
MADE IN EUROPE

BRAKE SHOES

DRAWINGS, FITMENTS

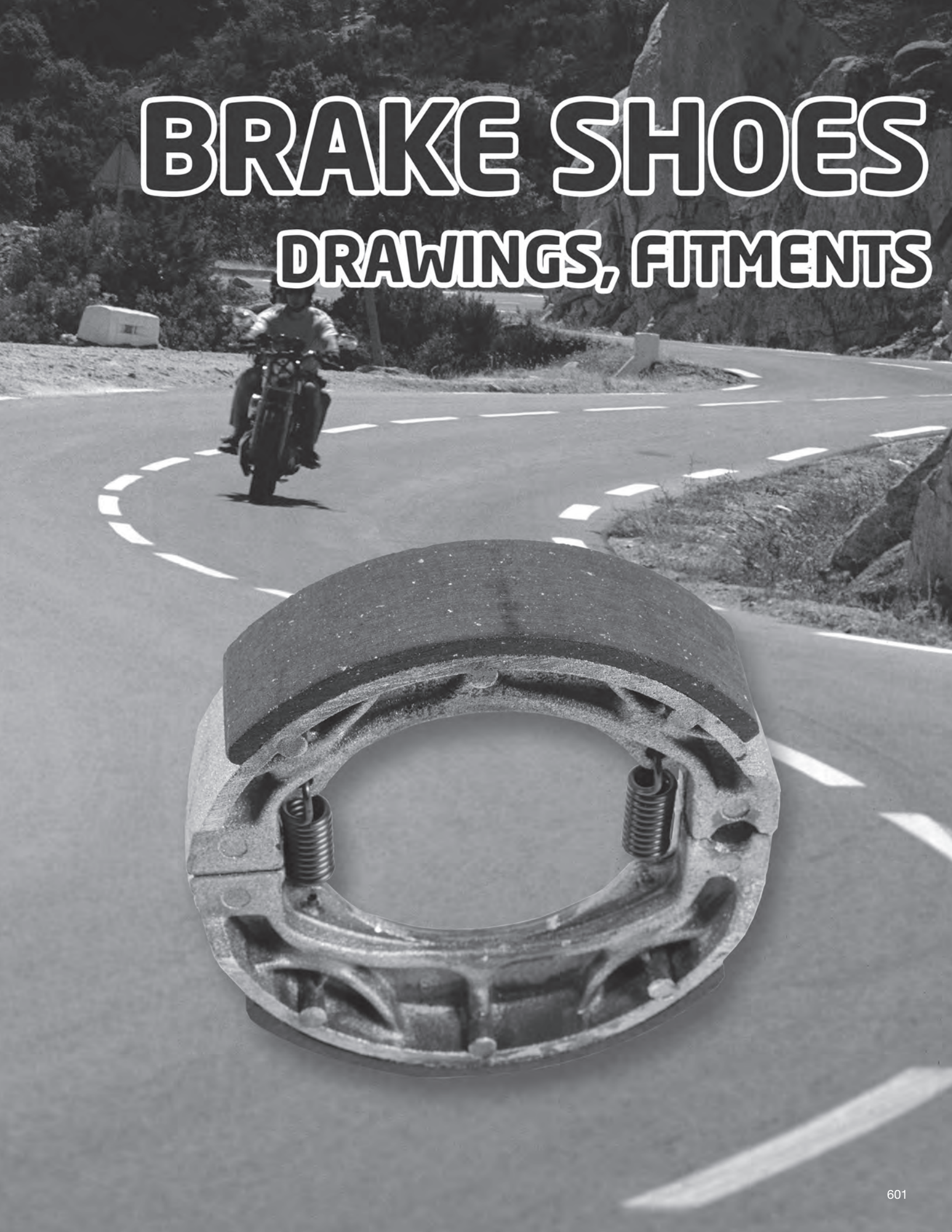

SBS 2010

ø80 x 18

HONDA					
CRF	50	F	04-21	•	•
NA	50	Express	79-81	•	
NB	50	ME, Aero	83-87	•	
NC	50	Express	77-80	•	•
NC	50	Express	81-83	•	
NN	50	MD Gyro	84-84	•	•
NQ	50	D, Spree	84-87	•	•
PA	50		78-81	•	
PA	50		82-83	•	•
QR	50		93-03	•	
QR	50	ED, EF	82-92	•	
SA	50	Elite LX, SR	88-93	•	
SB	50		88-89	•	•
TG	50	M Gyro S	85-86	•	•
XR	50	R	00-03	•	•
Z	50	R, RD	80-99	•	•
CT	70		91-94	•	•

SUZUKI					
DR-Z	50		19-21	•	•
DR-Z	70		08-21	•	•
YAMAHA					
TT-R	50		06-21	•	•

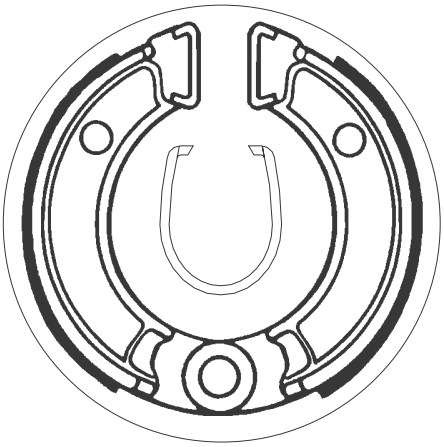

SBS 2011

ø95 x 20

HONDA					
NA	50	Express	79-81		•
NB	50	ME, Aero	83-87		•
NC	50	Express	81-83		•
NH	50	Lead	83-83		•
NH	50	Lead	86-94		•
NH	50	Lead (Drum vers.)	94-94		•
NH	50	Lead SS,MR, MSE	84-85		•
NS-1	50		91-94		•
PX	50		82-83		•
QR	50	ED, EF	82-92		•
SA	50	Elite LX, SR	88-93		•
NH	80	MD Lead, Aero	83-84		•

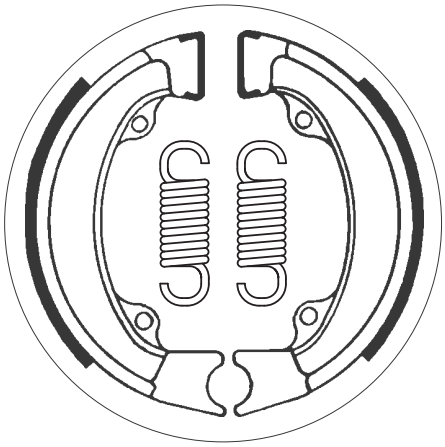

SBS 2012

ø110 x 25

APRILIA					
SR	50	Replica	94-96		•
SR	50	Replica (Liquid Cooled)	96-96		•
SR	50	WWW, Netscaper	97-99		•
E-TON					
RXL	150	Viper	07-07	•	
HONDA					
NH	50	Lead	83-83	•	
NH	50	Lead (Drum vers.)	94-94	•	
PK	50	Walaroo DX-STD	90-01		•
R	50	Monkey	88-88		•
ATC	70	K1	76-77		•

HONDA					
C	70	all models	75-83	•	•
CH	80	Elite	85-88	•	
NH	80	Aero	85-85	•	
NH	80	MD Lead, Aero	83-84	•	
EZ	90	Cub	90-95	•	•
TRX	90		93-01	•	
ANF	125	i Innova	07-11		•
ANF	125	Innova	03-06		•
ATC	125	ME, MF, MG, MH	84-87	•	
CH	125	D, E, Spacy, Elite	83-84	•	•
NH	125	Lead Scooter	86-87		•
TRX	125		85-88	•	
XL	125	K3	79-79	•	
CH	150	D Elite	85-87	•	•
ATC	185	A, S, SB	80-83	•	



Applications for this part number continues on following page.

Dimensions in mm / Dimensions en mm
1” = 25.4 mm , 1 mm = 0.04”



HONDA					
ATC	200		81-83	•	
ATC	200	E Big Red	82-83	•	
ATC	200	ES Big Red	84-84	•	
ATC	200	M	84-85	•	
ATC	200	S	84-86	•	
KYMCO					
	50	Agility	05-08		•
	50	Agility (4T) R10	06-14		•
	50	Agility (4T) R12	06-15		•
	50	Agility Basic	07-07	•	•
	50	MXU	05-10	•	
	125	Agility	06-11		•
	150	MXU	05-17	•	
MALAGUTI					
	50	Centro	93-96		•
	50	Yesterday	97-02		•
F-10	50		92-93		•
F-10	50	Jet-Line	94-98		•
F-12	50	Phantom	94-98		•
F-12	50	Phantom A.C.	99-03		•
F-15	50	Fire Fox	96-99		•
F-15	50	Fire Fox L.C.	96-08		•
SL	50	Centro	96-96		•
PEUGEOT					
		e-Vivacity	11-15		•
	50	Elyseo (A.J.P. cal.)	99-01		•
	50	Looxor	02-05		•
	50	Speedake (A.J.P. cal)	94-01		•
	50	Speedake (Brembo cal.)	94-01		•
	50	Speedake (Hengtong cal.)	94-01		•
	50	Speedfight 3 (AC)	10-16		•
	50	Speedfight LC, (A.J.P. cal.)	96-15		•
	50	Speedfight LC, (Brembo cal.)	96-15		•
	50	Speedfight LC, (Hengtong cal.)	96-15		•
	50	Trekker Road	99-00		•
	100	Elyseo (A.J.P. cal.)	99-01		•
SYM					
	50	Fiddle	09-14		•
	50	Jet, Alpha	95-97		•
	50	Jungle	96-02		•
	50	Mask	00-05		•
	50	Mask LC	00-05		•
	50	Red Devil	97-09		•
	50	Super Fancy	95-97		•
RS	50		05-09		•
	100	Super Fancy	95-00		•
	125	Attila	95-02		•
	150	Super Duke	96-01		•
YAMAHA					
	50	Axis Pro Foot	92-99		•

Dimensions in mm / Dimensions en mm
1" = 25.4 mm , 1 mm = 0.04"

SBS 2013

ø110 x 25

HONDA					
CB	50	all models	80-81		•
MB	50	S	80-82		•
MBX	50		80-82		•
MT	50	S	80-93	•	•
NSR	50		89-90		•
CR	80	R2	85-85	•	•
CR	80	RA, RB	80-81	•	•
CR	80	RC	82-82	•	
XR	80		79-84	•	•
C	90		93-02	•	•
NH	90	Yupy	90-94		•
XL	100	all models	78-85	•	•
XR	100		81-84	•	•
CR	125	M2, M3, M4	76-78	•	•
MT	125	R	77-78		•
XL	125	K3	79-79		•
XL	125	S	79-84	•	•
XLR	125	R	98-01		•
XR	125	L	03-07		•
CRF	150	F	03-06		•
XL	185	S	79-83	•	•
CTX	200		04-06		•
TLR	200	Fatcat	86-87	•	•
TLR	200	G, H	86-87	•	
TR	200		86-87	•	•
XL	200	R	83-84	•	•
XR	200		80-84	•	•
XR	200	R	84-02	•	•
XR	200	R, Pro Link	81-83	•	•

HONDA					
CRF	230		04-09		•
TL	250		75-76	•	•
XL	250	R	84-87		•
XR	250	R	84-89		•
XR	350	R	83-85		•
XR	500	R, Pro Link	83-84		•
XR	600	R	83-90		•

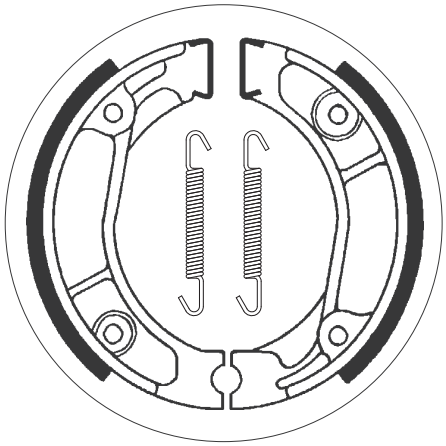

SBS 2014

ø130 x 28

HONDA					
ATC	250	R	81-81		•
HYOSUNG					
GV	250		02-09		•
KAWASAKI					
KZ	200		78-79		•
KZ	250		80-83		•
SUZUKI					
RM	80		83-85	•	
TS	90		71-73		•
RM	100		76-78		•
DR	125		82-84	•	•
DR	125		86-02		•
GN	125		82-10		•
GS	125	ESD	83-94		•
GT	125		75-78		•
RM	125		75-78	•	•
RM	125		79-83	•	
SP	125		82-83	•	•
SP	125		86-88		•
TS	125		72-72		•
TS	125		73-81	•	•
GT	185		75-77		•
TS	185		74-81	•	•
DR	200		86-88		•
DR	200	S	15-17		•
DR	200	SE	96-13		•
DR	200	T	96-96		•

SUZUKI					
SP	200		86-88		•
DR	250		82-83	•	•
DR	250		85-89		•
GN	250		86-97		•
RM	250		76-78	•	
SP	250		85-85		•
RM	400		78-78	•	
RM	465		81-82		•
RM	500		83-87		•
SP	600	F	85-87		•

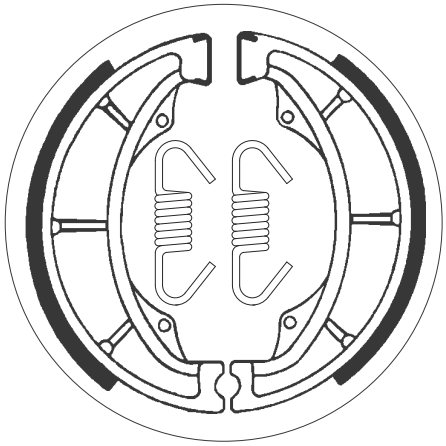

Dimensions in mm / Dimensions en mm
1” = 25.4 mm , 1 mm = 0.04”

ø110 x 30

SBS 2015

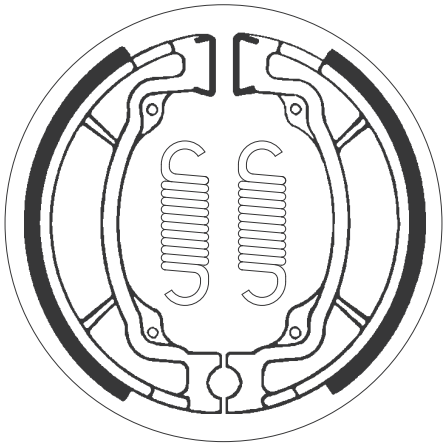

HYOSUNG					
	110	Midas Plus	98-04		•
FX	110	110	02-04		•
KR	110	Master	04-05		•
KAWASAKI					
AE	50		81-82	•	•
AR	50		81-82		•
KD	80		80-87	•	•
KD	80		88-90		•
KE	100		79-97	•	•
KH	100		76-77	•	•
KM	100		78-81	•	•
KLF	110	Mojave	87-88	•	
KLT	110		84-86	•	
KLX	110		02-21		•
KLT	160		85-85	•	
KLT	185		86-87	•	
KLT	200		81-84	•	
KLT	250		82-83	•	
KLT	250	Police	84-84	•	
KLT	250	Prairie	83-85	•	
SUZUKI					
OR	50		79-79	•	•
RM	50		78-80	•	•
RM	80		77-79	•	•
RV	90		73-81	•	•
TS	90		71-73	•	
RM	100		76-81	•	

SUZUKI					
	110	Smash	03-06	•	•
DR-Z	110		02-06		•
FX	110	Shogun	98-02	•	•
TS	125		72-72	•	

ø150 x 28

SBS 2016

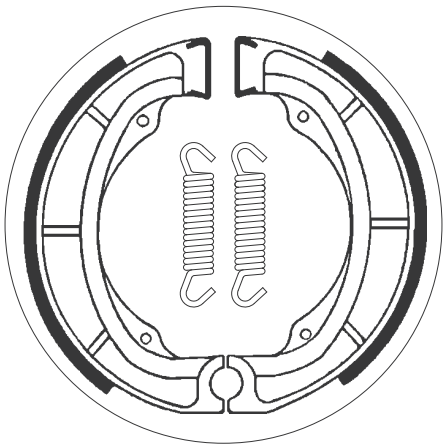

KAWASAKI					
KDX	250		80-82		•
KL	250		78-80		•
KX	250		75-81		•
KZ	250		80-83	•	
KX	420		80-81		•
SUZUKI					
ALT	125		84-86		•
LT	125	E-H	84-87		•
LT	160		89-92		•
LT-F	160		91-04		•
ALT	185		85-87		•
LT	185		84-87		•
LT	230		85-86		•
LT-F	230		86-87		•
RM	250		76-78		•
RM	250		79-79	•	
TS	250		74-82	•	•
SP	370		77-79	•	•
PE	400		79-81	•	•
RM	400		78-78		•
RM	400		79-79	•	
SP	400		80-82	•	•

Dimensions in mm / Dimensions en mm
1" = 25.4 mm , 1 mm = 0.04"

SBS 2017 — ø110 x 25

SUZUKI					
GSXR	50		87-87		•
LT-A	50	Quadmaster	01-05		•
LT-Z	50	Quadsport	06-20		•
OR	50	E	80-80		•
RM	50		81-82	•	•
ZR	50		81-87		•
DS	80		80-96	•	•
JR	80		01-07	•	•
RM	80		80-81	•	•
RM	80		83-85		•
LT-Z	90	Quadsport	07-14	•	
DR	100		83-90	•	•
DR-Z	125	K	03-12	•	•
DR-Z	125	L	03-20		•



SBS 2018 — ø160 x 30

SUZUKI					
GS	250		80-82		•
GS	300		82-85		•
GN	400		80-80		•
LT-A	400	Eiger 2WD/4WD	02-07		•
LT-F	400	Eiger 2WD/4WD	02-07		•
GS	425		79-80		•
GS	450		80-83		•
GS	450		85-85		•
GR	650	X	83-84		•
LS	650	P	86-88		•
LS	650	P Savage	95-04		•
S40	650	Boulevard	05-18		•

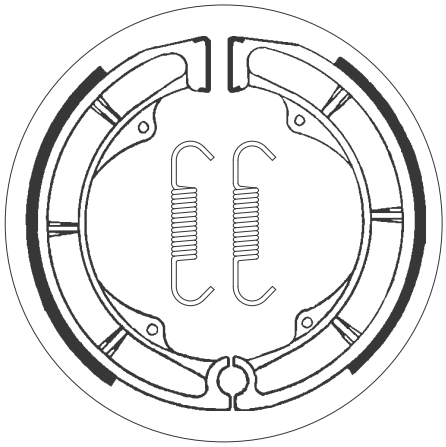

SBS 2019 — ø140 x 28

HONDA					
ATC	80		76-78		•
ATC	90	K1, K2, K3	73-78		•
TRX	90		93-01		•
ATC	110	all models	79-85		•
ATC	125	ME, MF, MG, MH	84-87		•
TRX	125		85-88		•
CD	175	all models	71-78	•	
ATC	185	A, S, SB	80-83		•
ATC	200		81-83		•
ATC	200	E Big Red	82-83		•
ATC	200	ES Big Red	84-84		•
ATC	200	M	84-85		•
ATC	200	S	84-86		•
TRX	200		84-84		•
TRX	200		90-91		•
TRX	200	D Type II	91-97		•
TRX	200	SX	86-88		•

HONDA					
ATC	250	ES, SX	85-87	•	
FL	250	Odyssey	77-84		•

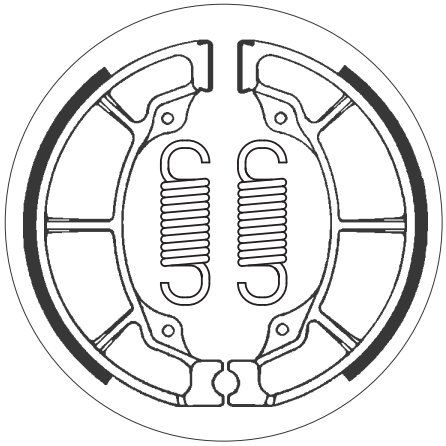

Dimensions in mm / Dimensions en mm
1” = 25.4 mm , 1 mm = 0.04”

ø90 x 20

SBS 2020

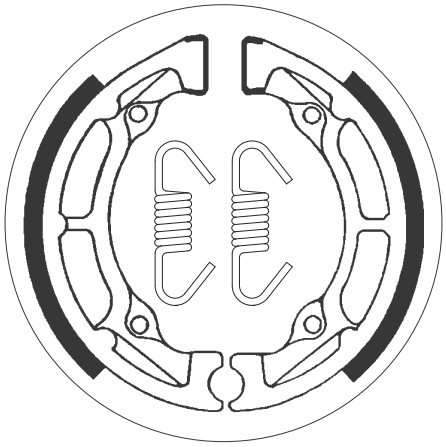

SUZUKI					
ALT	50		83-84		•
JR	50		89-07	•	•
LT	50		84-02		•

ø95 x 20

SBS 2021

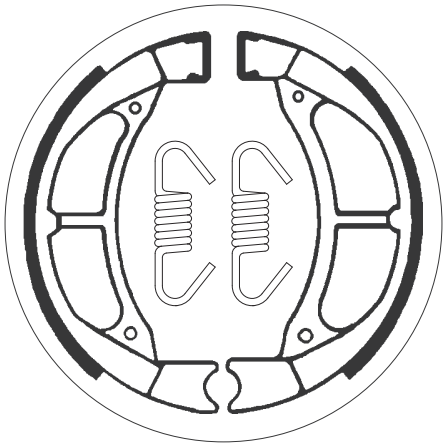

YAMAHA					
CA	50	Riva Salient	83-86		•
CG	50	A, B Riva Jog	90-91		•
CY	50	F Jog	94-94	•	
JOG	50	CY	90-92	•	
JOG	50	E	88-90		•
JOG-Z	50		90-91		•
LC	50	M, Bop, G, H Champ	80-81	•	•
SG	50	Sting	84-91	•	•
SH	50	E, F Razz	93-95		•
SH	50	Mint	93-96		•
SH	50	T,EMT,U,MU, W,MW,A,MA, B,D,MD	87-93		•
JOG	90		90-91		•

ø100 x 20

SBS 2022

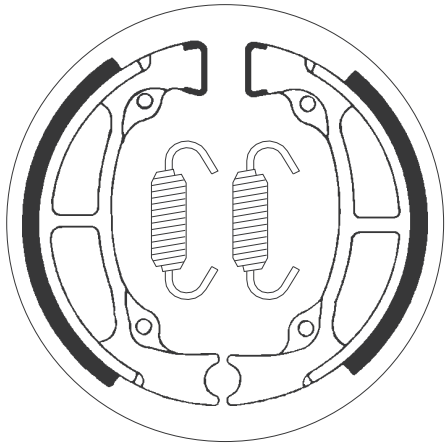

SUZUKI					
RM	80		82-85	•	

Dimensions in mm / Dimensions en mm
1" = 25.4 mm , 1 mm = 0.04"

SBS 2023

ø140 x 25

HONDA				
CM	185 T	78-79	•	
CM	200 TA, TB	80-82	•	
CB	250 Nighthawk	91-02	•	
CM	250 C	82-83	•	
MT	250 K1	74-76	•	•
XL	250	78-79		•
XL	250 S	78-81	•	
XR	250	79-80	•	
XL	350	76-78		•
XL	500 SZ	80-80	•	

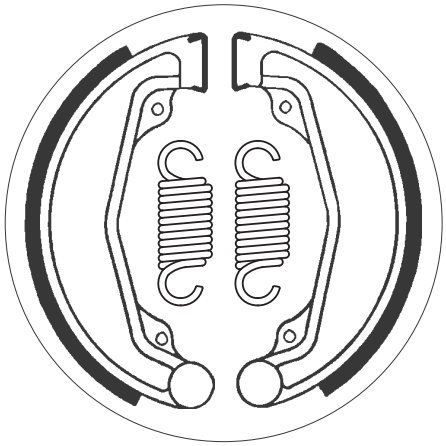

SBS 2024

ø160 x 30

HONDA				
ATC	250 ES, SX	85-87		•
TRX	250	85-87		•
TRX	300	88-00		•
TRX	300 4WD	88-00		•
CB	350 F, F1	73-76		•
CB	350 K4	74-74		•
CB	360 G, T	73-76		•
CB	400 F, F1, F2	75-79		•

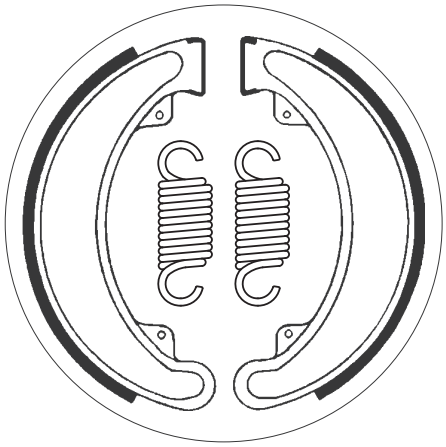

SBS 2025

ø110 x 30

KAWASAKI				
KX	125	83-85		•
KDX	200	83-85		•
KDX	200 C	86-88		•

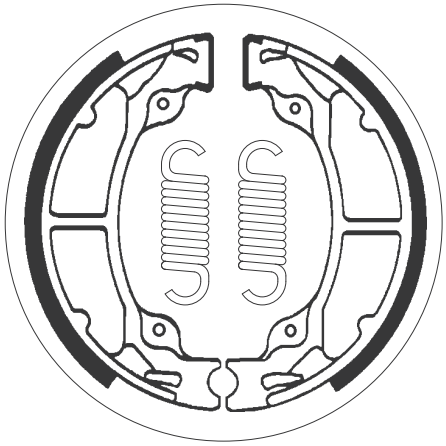

Dimensions in mm / Dimensions en mm
1” = 25.4 mm , 1 mm = 0.04”

ø130 x 30 — SBS 2026

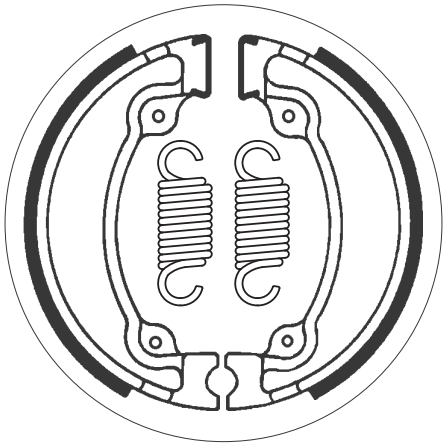

CAGIVA				
T4	350	R	87-99	•
T4	500	E	87-90	•
HONDA				
XL	250	S	81-81	•
XL	500	R	83-87	•
XL	500	RC	82-82	•
XL	500	SZ	80-80	•
XR	500	R Pro Link	81-82	•
XR	500	SZ, SA	79-80	•
XL	600	R	83-86	•
XL	600	V, Transalp	87-90	•

ø180 x 40 — SBS 2027

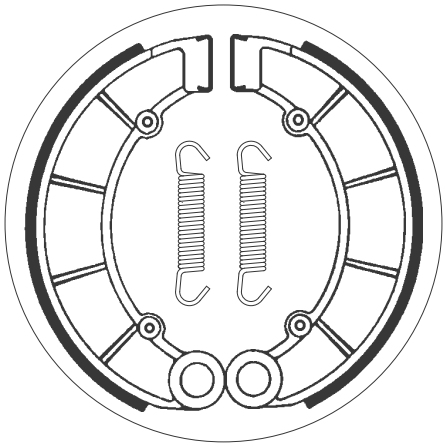

HONDA				
CB	650		79-81	•
CB	650	C	80-85	•
CB	650	SCC Nighthawk	82-82	•
CB	650	Z	78-81	•
CB	750	A	76-78	•
CB	750	C	80-84	•
CB	750	C, F, FII, K	85-86	•
CB	750	K Four	77-78	•
CB	750	K, L	79-80	•
CB	750	K0-K6 Four	70-76	•
CB	750	KZ	82-82	•
CB	750	PZ	81-84	•
CB	750	SC	82-83	•

ø110 x 25 — SBS 2028

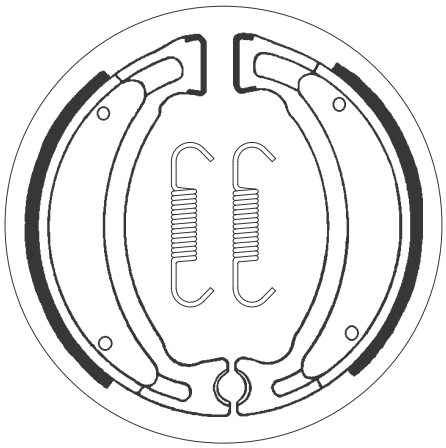

ADLY				
	25	Silver Fox	00-05	•
	50	Fox	00-09	•
	50	Jet	96-99	•
	50	Pista, Pista Twin Light	96-99	•
	50	Silver Fox	00-09	•
	100	Jet	96-99	•
	100	Silver Fox	06-06	•
CPI				
	50	Baby	02-02	•
	50	Hussar	01-06	•
	50	Mars	01-02	•
	50	Oliver	03-12	•
	50	Oliver City	03-12	•
	50	Oliver Sport	03-12	•
	50	Popcorn	01-02	•

DERBI					
DXR	200	Quad (Front drum)	04-05	•	
DXR	250	Quad (Front drum)	04-05	•	
KEEWAY					
	50	Flash	07-12		•
	50	Flash Electric	10-12		•
	50	Hurricane	06-16		•
	50	Matrix	06-15		•
F-NKD	50		10-11		•
RY8	50		07-09		•
POLARIS					
	250	Cyclone	87-87	•	
	350	Trail Boss 2x4	85-87	•	

Dimensions in mm / Dimensions en mm
1" = 25.4 mm , 1 mm = 0.04"

Applications for this part number continues on following page.

SBS 2028

ø110 x 25

YAMAHA					
CR	50	Target	91-95		•
CY	50	F Jog	94-94		•
YE	50	Zest (Italy)	92-95		•
YFM	50	Raptor	04-11	•	
YSR	50		87-91		•
YFM	80		92-94	•	
YFM	80	Badger	95-07	•	
YFM	80	Grizzly	05-08	•	
YFM	80	Raptor	02-08	•	
TT-R	90		00-10		•
YFM	90	RY Raptor	09-15	•	
RT	100	A-H	90-96	•	•
YFM	100	Champ	89-91	•	
YZ	100		82-83	•	
TT-R	110		08-21		•
TT-R	125		00-13	•	•
TT-R	125	LW	00-20		•
TW	125		99-07		•
XT	125		82-86		•
YFA	125	1 D, E Breeze	92-93	•	
YFA	125	1 F Breeze	94-94	•	
YFA	125	1 G-M Breeze	95-07	•	
YFA	125	1 W, A, B Breeze	89-91	•	
YFM	125	Grizzly	04-13	•	
XC	150	Fly One R	98-02		•
YT	175	Tri Moto	82-83	•	
SR	185	Exiter, H, J	81-82		•
BW	200		85-88	•	•
TT	200		86-89		•
TW	200		87-15		•
XT	200		85-95		•

YAMAHA					
YFM	200	DXS-DXW Moto 4	86-87	•	
YFM	200	N Moto 4	85-89	•	
YFS	200	U-P Blaster	88-02	•	
YTM	200	EK, EL Tri Moto	83-84	•	
YTM	200	ERN Tri Moto	85-85	•	
YTM	200	K-N Tri Moto	83-85	•	
TT	225	S,T	86-00		•
TTR	225		01-04		•
XT	225		92-01		•
XT	225	Serow	86-86		•
YFM	225	Moto 4	86-88	•	
YTM	225	DRN, DRS Tri Moto	85-86	•	
YTM	225	DXK, DXN Tri Moto	83-85	•	
YFB	250	Timberwolf	92-94	•	
YFM	350	ERT, ERU	87-88	•	

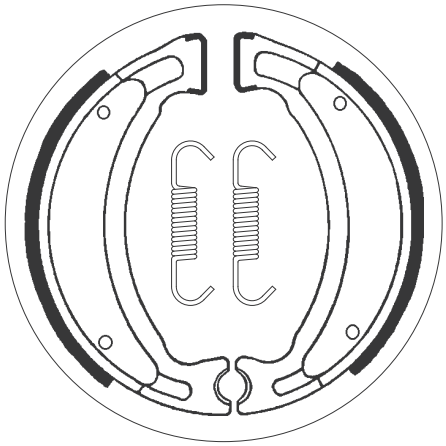

SBS 2029

ø110 x 30

HONDA				
NX	250		88-90	•
XL	250	R	82-83	•
XL	250	S	78-80	•
XR	250		79-80	•
XR	250	R	81-83	•
XL	350	R	84-87	•

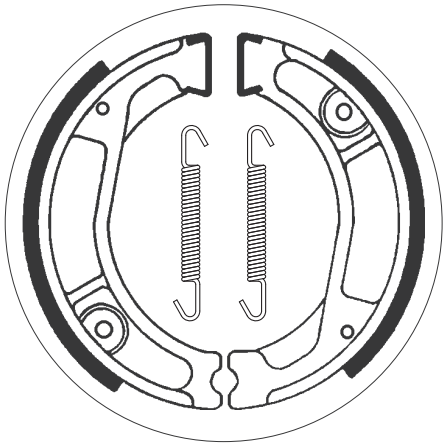

Dimensions in mm / Dimensions en mm
1” = 25.4 mm , 1 mm = 0.04”

ø130 x 25 — SBS 2030

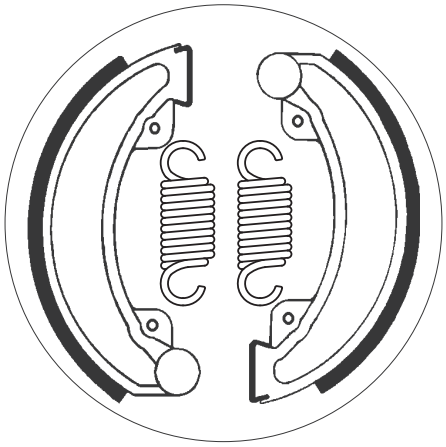

HONDA				
CR	250 R	81-82	•	
XR	250 R	81-83	•	
CR	450 R	81-81	•	
CR	480 R	82-82	•	
XR	500 R Pro Link	81-82	•	

ø140 x 25 — SBS 2031

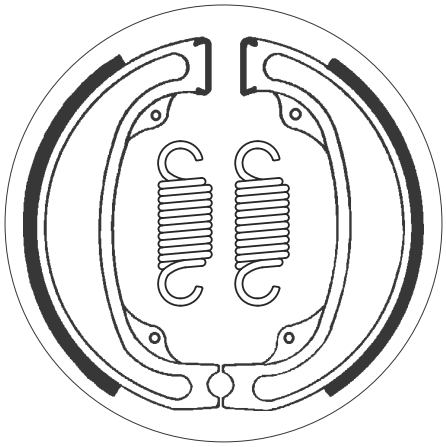

HONDA				
CR	125 R	79-81	•	
CR	250 RZ, RA	79-80	•	
XR	500 SZ, SA	79-80	•	

ø110 x 25 — SBS 2032

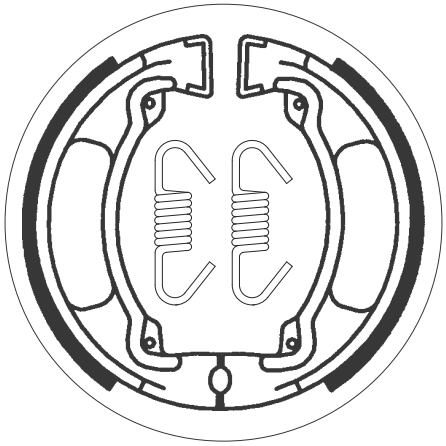

CPI				
	50 Popcorn	03-06		•
YAMAHA				
LB	50 Chappy	80-83	•	•
RD	50 MX	81-87		•
YSR	50	92-92		•
RD	60	73-75	•	•
YZ	80	74-79		•
DT	100	76-80	•	
RS	100	75-80	•	•
YZ	100	78-81	•	
TY	125	80-82	•	
YZ	125	74-75	•	
TY	175	77-80	•	
TY	250	77-78	•	
TY	250	84-90		•
TY	250 R	91-92		•

YAMAHA			
BW	350	87-88	•
TY	350	86-86	•

Dimensions in mm / Dimensions en mm
1" = 25.4 mm , 1 mm = 0.04"

SBS 2033

ø130 x 22

YAMAHA					
YZ	125		76-83	•	
IT	175		80-82	•	
IT	250		80-82	•	
TY	250		81-81	•	
YZ	250		74-81	•	
YZ	400		77-79	•	
IT	425		80-80	•	
IT	500	G, H.	80-81	•	

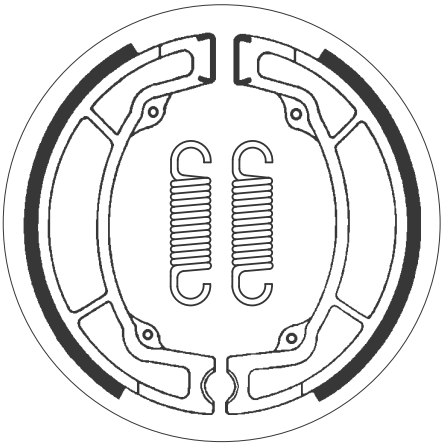

SBS 2034

ø130 x 28

YAMAHA					
YFM	50	Raptor	04-11		•
YFM	80		87-88		•
YFM	80		92-94		•
YFM	80	Badger	95-07		•
YFM	80	Grizzly	05-08		•
YFM	80	N, S Moto 4	85-86		•
YFM	80	Raptor	02-08		•
	100	Aerox	00-06		•
DT	100		76-80		•
YFM	100	Champ	87-91		•
YZ	100		78-83		•
TY	125		80-82		•
XC	125	Beluga	85-85	•	•
XC	125	Beluga, Riva	87-92		•
XC	125	Cygnus F	00-08		•
XC	125	F	00-08		•
XC	125	TR Cygnus, R	96-98		•
XT	125		82-86	•	
YBR	125		06-07		•
YFA	125	1 D, E Breeze	92-93		•
YFA	125	1 F Breeze	94-94		•
YFA	125	1 G-M Breeze	95-07		•
YFA	125	1 W, A,			
		B Breeze	89-91		•
YFM	125	Grizzly	04-13		•
YZ	125		74-82		•
	135	Crypton X	08-14		•
DT	175		95-99	•	•
DT	175		00-00		•
DT	175	all models	74-83	•	•
IT	175		80-82		•
TY	175		77-80		•
RT	180		90-93		•
RT	180		95-96		•
SR	185	Exiter, H, J	81-82	•	
TW	200		87-00	•	
XC	200	Riva	87-91		•
XT	200		85-95	•	
TT-R	230		05-05		•
FZ	250	Phazer N, S	85-86		•
SR	250	SE	80-82		•
TT	250		87-92		•

YAMAHA					
TY	250		77-78		•
XT	250		80-81	•	•
XV	250	Route 66	88-90		•
XV	250	Route 66	95-97		•
XV	250	S Virago	95-07		•
XV	250	Virago	88-94		•
XVS	250	V-Star	08-12		•
YZ	250		80-80		•
YZ	250		82-87		•
TT	350		86-87		•
XT	350		85-96		•
YZ	490		83-83		•
TT	600		85-88		•
TT	600	K,L	83-84		•



Dimensions in mm / Dimensions en mm
1” = 25.4 mm , 1 mm = 0.04”

ø160 x 25

SBS 2035

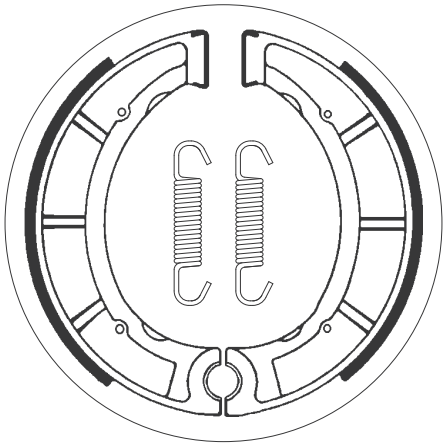

YAMAHA					
DT	250	all models	75-80	•	
SR	250	SE	80-82	•	
YFB	250	Timberwolf	92-94		•
YFB	250	Timberwolf	95-96	•	•
YFB	250	Timberwolf 4WD	94-03	•	•
YFM	250		89-91	•	
YFM	250	Timberwolf (YFB 250 G)	95-95	•	•
YFU1TW	250	Pro Hauler	89-89	•	
YFU1W	250	Pro Hauler	89-90	•	
YZ	250		74-79		•
YFM	350	ERW, ERA-G	89-95	•	
YFP	350	U Terrapro	88-88	•	
DT	400	all models	75-77	•	
YZ	400		77-79		•
IT	425		80-80		•

YAMAHA				
YZ	465	80-80		•
IT	500	G, H.	80-81		•
XT	500	76-80	•	

ø130 x 22

SBS 2036

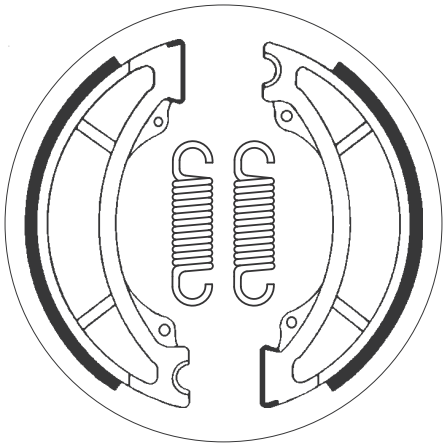

YAMAHA				
YZ	125	84-84	•	
IT	250	84-84	•	
YZ	250	82-84	•	
IT	465	81-82	•	
YZ	465	80-81	•	
IT	490	84-84	•	
YZ	490	81-84	•	
TT	600	K,L	83-84	•	

ø150 x 25

SBS 2037

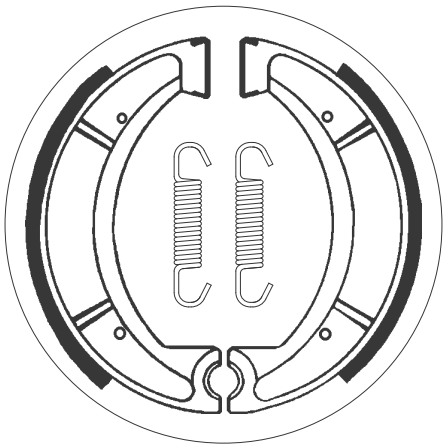

YAMAHA					
XC	180	Cygnus, Riva	83-85		•
RD	200	A, B	74-75		•
DT	250	all models	75-80		•
IT	250		80-82		•
IT	250		84-86		•
SRX	250	T, TC	87-87		•
TY	250		81-81		•
YZ	250		81-81		•
DT	400	all models	75-77		•
IT	465		81-82		•
YZ	465		81-81		•
IT	490		84-84		•
YZ	490		81-90		•
SR	500		78-84		•
XT	500		76-80		•
XT	550		82-83	•	•
XT	600		83-86		•

Dimensions in mm / Dimensions en mm
1" = 25.4 mm , 1 mm = 0.04"

SBS 2038

ø160 x 30

KAWASAKI				
KLF	185 Bayou	85-88		•
KLF	220 Bayou	88-02		•
EL	250	91-94		•
EL	250 Eliminator	88-89		•
KLF	300 A1, A2 Bayou	86-87		•
KLF	300 Bayou	88-04		•
EX	305	83-83		•
KZ	305	81-82		•
KZ	305	87-88		•
KZ	400	78-79		•
KZ	400 H1 (LTD)	79-79		•
KZ	440 , LTD	83-85		•
KZ	440	80-83		•
KZ	440 C	80-81		•
KZ	440 C, Twin	81-83		•
KZ	440 LTD	80-82		•
EX	500	87-93		•

KAWASAKI				
ZR	550 A1, GP	83-84		•
W	650	99-05		•

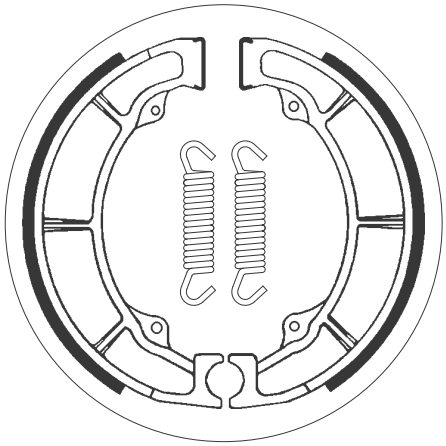

SBS 2039

ø120 x 28

KAWASAKI				
KE	125	76-85	•	
KX	125	74-81	•	
KDX	175	80-82	•	
KE	175	76-78	•	
KL	250	80-84	•	
KLX	250	79-80	•	
KT	250 all models	75-80	•	

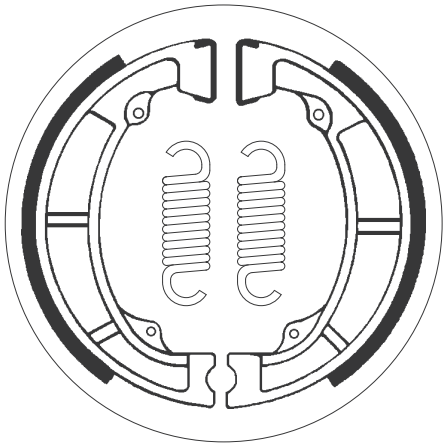

SBS 2040

ø140 x 28

KAWASAKI				
KLF	185 Bayou	86-88	•	
KLT	200	81-84		•
KLF	220 Bayou	88-02	•	
KDX	250	80-84	•	
KL	250	78-80	•	
KLT	250	82-83		•
KLT	250 Police	84-84		•
KLT	250 Prairie	83-85		•
KX	250	75-81	•	
KXT	250 Tecate	84-84	•	
KX	420	80-81	•	

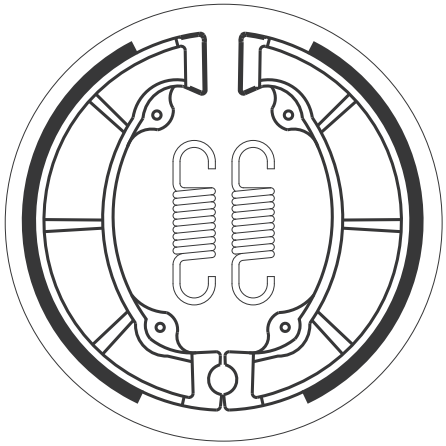

Dimensions in mm / Dimensions en mm
1” = 25.4 mm , 1 mm = 0.04”

ø130 x 25 — SBS 2041

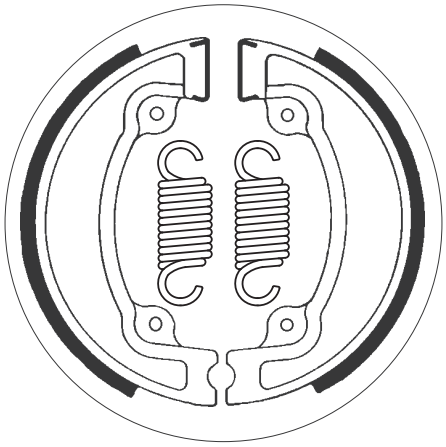

BOMBARDIER					
	50	Quest	03-04		•
DS	50		02-06		•
	90	Quest	03-04		•
DS	90		02-06		•
CAN-AM					
DS	50		07-11		•
DS	70		08-14		•
DS	90		07-18		•
HONDA					
TRX	70		86-87		•
CB	125	S	84-85	•	
CR	125	R	79-81		•
CR	125	RC	82-82	•	•
CH	250	Elite	85-86	•	
CH	250	Elite	87-90	•	•

HONDA					
CN	250		93-04		•
CR	250	R	81-82		•
XL	250	R	82-83	•	
CR	480	R	82-82		•

ø130 x 22 — SBS 2042

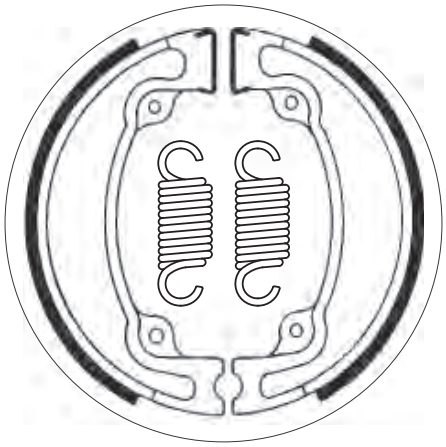

HONDA					
CR	125	RD	83-83	•	•
CR	125	RE, RF	84-85		•
CR	250	R	83-83		•
CR	250	RE, RF	84-85		•
XR	350	R	83-83	•	
CR	480	R	83-83		•
CR	500	RE, RF	84-85		•

ø86 x 20 — SBS 2043

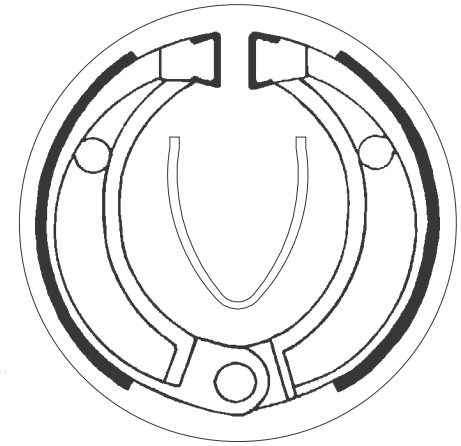

HONDA					
CR	80	R	86-91		•
CR	80	RF	85-85		•
POLARIS					
	90	Predator	03-14	•	

Dimensions in mm / Dimensions en mm
1" = 25.4 mm , 1 mm = 0.04"

SBS 2044

ø160 x 30

HONDA					
TRX	200		84-84	•	
TRX	250		85-87	•	
FL	350	R Odyssey	85-87	•	
FL	400	R Pilot	89-90	•	

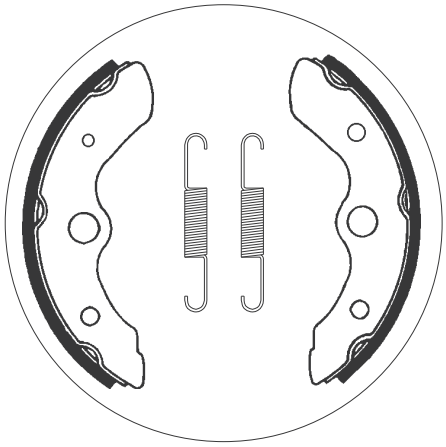

SBS 2045

ø160 x 30

HONDA					
TRX	350	all models	86-89	•	

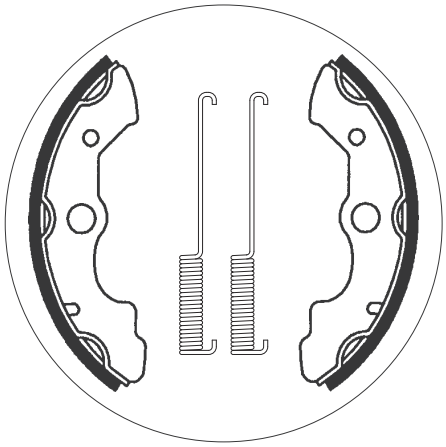

SBS 2046

ø180 x 35

HONDA					
TRX	350	all models	86-89		•
TRX	500	all models	05-14		•
CB	700	SC	84-86		•
VF	700	C Magna	85-87		•
VT	700	C Shadow	86-86		•
VT	700	C, Shadow	87-87		•
VF	750	C, CD Magna	94-98		•
VF	750	C, Magna	88-93		•
VT	750	Black Widow	01-03		•
VT	750	C, Shadow	86-96		•
VT	750	C2 Shadow A.C.E.	97-03		•
VT	750	C2 Shadow Spirit	07-11		•
VT	750	C2B Phantom	10-18		•
VT	750	C4 Shadow	04-05		•
PC	800	Pacific Coast	89-97		•

HONDA					
VT	800	C	88-94		•
VT	1100	C Shadow	87-96		•

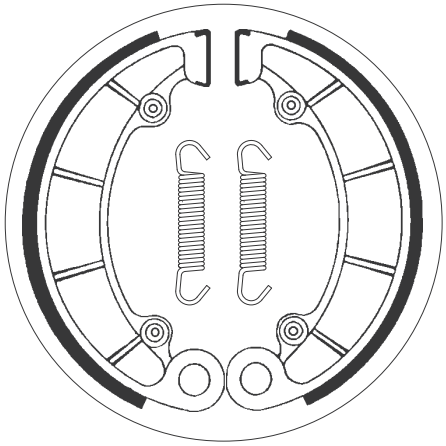

Dimensions in mm / Dimensions en mm
1” = 25.4 mm , 1 mm = 0.04”

ø130 x 25 — SBS 2047

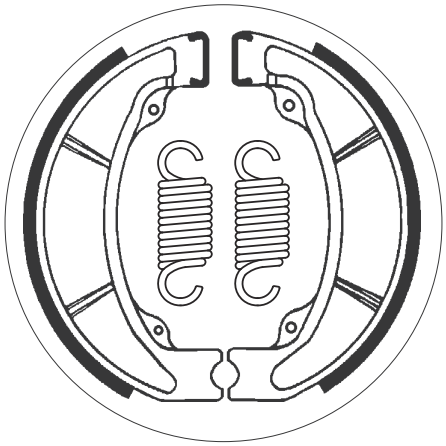

HONDA				
CR	125 RG	86-86		•
CR	250 RG	86-86		•
CR	500 RG	86-86		•

ø87 x 20 — SBS 2048

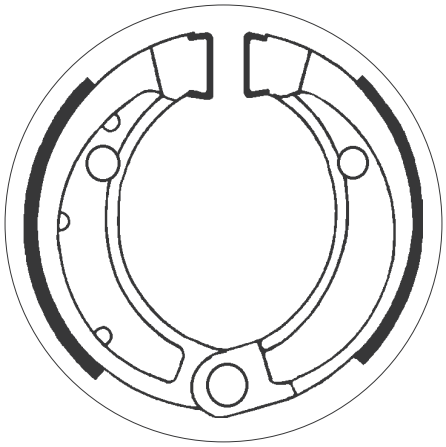

ARCTIC CAT				
	50 2WD	04-06	•	
	50 DVX	06-08	•	
	90 2WD	02-04	•	
	90 DVX	06-14	•	
BOMBARDIER				
	50 Quest	03-04	•	
DS	50	02-06	•	
	90 Quest	03-04	•	
DS	90	02-06	•	
CAN-AM				
DS	50	07-11	•	
DS	70	08-14	•	
DS	90	07-18	•	

HONDA				
TRX	70	86-87	•	
POLARIS				
	50 Predator	04-14	•	
	50 Scrambler	01-03	•	
	90 Scrambler	01-03	•	
	90 Sportsman	01-15	•	

ø130 x 22 — SBS 2049

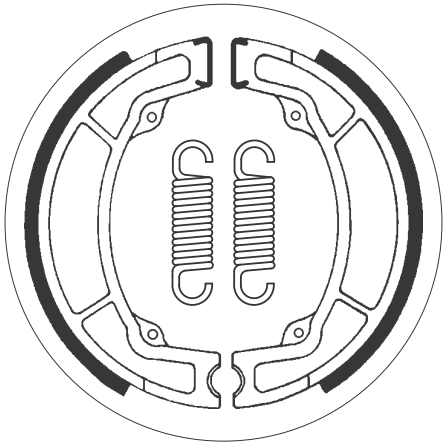

YAMAHA				
YZ	125	83-87		•
IT	200	84-85	•	•
IT	200	86-86		•
TY	250	84-90	•	
BW	350	87-88	•	
TY	350	86-86	•	

Dimensions in mm / Dimensions en mm
1" = 25.4 mm , 1 mm = 0.04"

SBS 2050

ø110 x 25

YAMAHA					
BW	50		91-94	•	•
BW	50	Bump	97-02		•
BW	50	Next Generation	96-07		•
BW	50	Spy	95-03		•
CR	50	Z	91-95		•
CW	50	TA Zuma	90-90	•	•
DT	50	R	96-97		•
JOG	50	CY	90-92		•
JOG	50	R	02-07		•
TRAFIC	50	M	83-83	•	•
YM	50	Breeze, Fizz	95-95		•
YN	50	Neo's, LC	97-16		•
YF	60	S Moto 4	86-86		•
YT	60	Tri Zinger	84-85		•
YFM	80		87-88	•	
YFM	100	Champ	87-88	•	

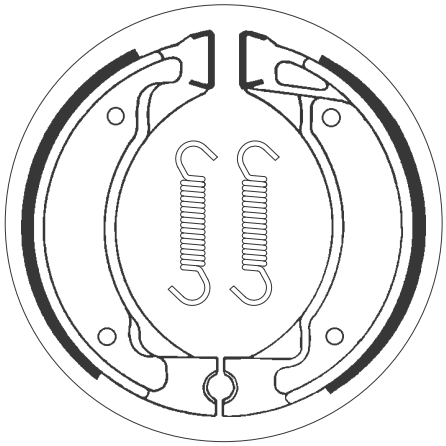

SBS 2051

ø140 x 24

SUZUKI				
LT	230		85-86	•	
LT-F	230		86-87	•	
LT	250		85-86	•	
LT	300		87-89	•	
LT-F	300		88-90	•	

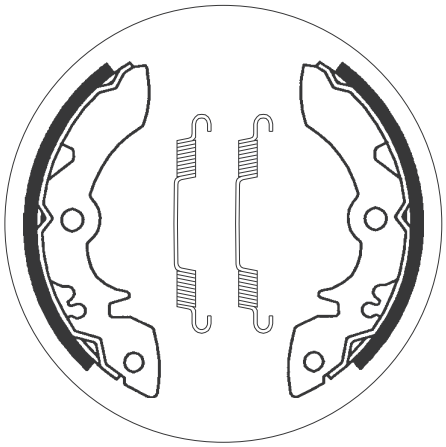

SBS 2052

ø180 x 36

SUZUKI					
LT-F	280	4WD	91-98		•
LT-F	300		88-90		•
LT-F	300	King Quad	91-01		•
LT-F	300	King Quad			
		Left/Rear	02-02		•
GV	700	GLG Madura	86-86		•
VS	700	GLFG	86-87		•
VS	750	Intruder	86-91		•
C50	800	Boulevard	05-18		•
M50	800	Boulevard	05-18		•
S50	800	Boulevard	05-18		•
VL	800	Intruder LC			
		Volusia	01-04		•
VS	800	Intruder	91-99		•
VZ	800	Marauder	97-04		•

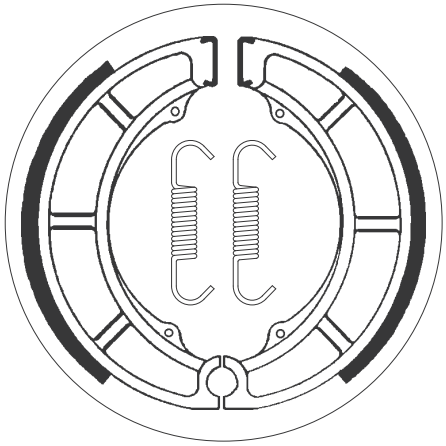

Dimensions in mm / Dimensions en mm
1” = 25.4 mm , 1 mm = 0.04”

ø165 x 32 — SBS 2053

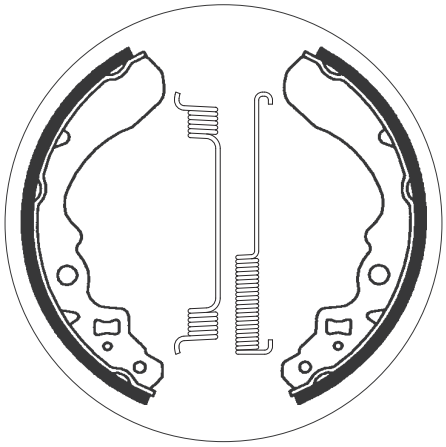

KAWASAKI					
KAF	300	Mule 500	92-95	•	
KAF	300	Mule 550	03-05	•	
SUZUKI					
LT	250	4WD	87-98	•	
LT-F	250		88-01	•	
LT-F	250	4WD V, W Quadrunner	97-98	•	

ø160 x 30 — SBS 2054

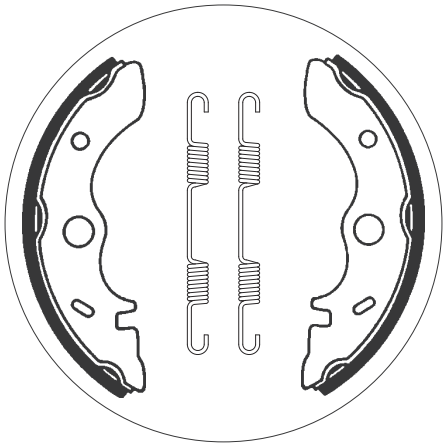

KAWASAKI					
KLF	300	A1, A2 Bayou	86-87	•	

ø140 x 30 — SBS 2055

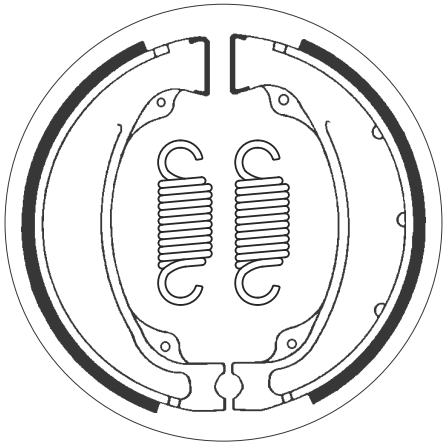

HONDA					
TRX	250	EX Sportrax	01-08		•
TRX	250	Recon	97-14		•
TRX	250	X	08-13		•

Dimensions in mm / Dimensions en mm
1" = 25.4 mm , 1 mm = 0.04"

SBS 2056

ø120 x 35

KAWASAKI					
KDX	200		83-85	•	
KL	250	(KLR 250)	85-97		•
KL	250		80-84		•

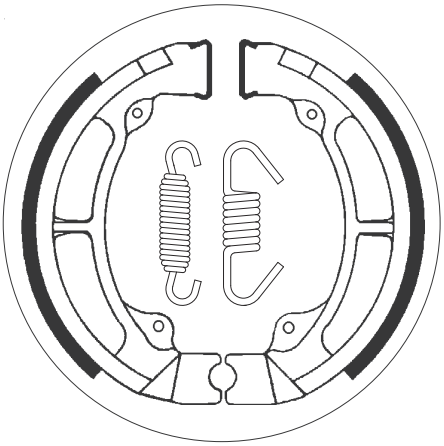

SBS 2057

ø95 x 20

HONDA					
CH	50	P Metropolitan II	02-06	•	•
CHF	50	Metropolitan	02-05	•	•
CR	50	RE, RF	84-85	•	•
NPS	50	Zoomer	01-12	•	•
PK	50	Walaroo			
		DX-STD	90-01	•	
QR	50		93-03		•
SA	50	J Vision	88-94	•	•
CR	60	RF, RG	85-86	•	•
CRF	70	F	04-14	•	•
XR	70		97-12	•	•
CH	80	Elite	85-88		•
CR	80	RC	82-82		•
CR	80	RD, RE	83-84	•	•
CR	80	RF	85-85	•	
CRF	80	F	04-14	•	•
NH	80	Aero	85-85		•

HONDA					
XR	80	R	85-88	•	•
CRF	100	F	04-14	•	•
XR	100	R	85-03	•	•
CRF	110	F	13-21	•	•
CRF	125	F	14-20		•
TLR	200	G, H	86-87		•
KYMCO					
CX	50	Curio Super	94-97		•
SYM					
	50	Mio	05-16		•
DD	50		02-12		•

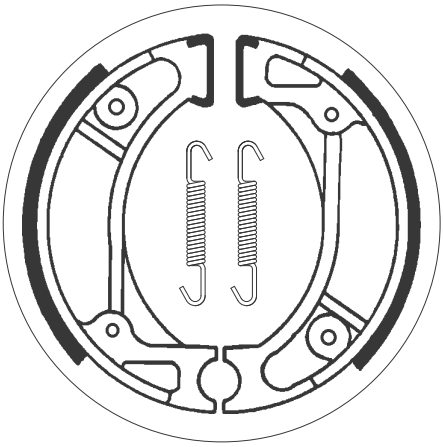

SBS 2058

ø140 x 40

HONDA					
CA	250	Rebel	90-95		•
CB	400	A	77-81		•
CB	400	N, T, Hawk	78-82		•
CB	400	T1, T2	77-78		•
CM	400	A, T, TZ	79-79		•
CM	400	C	81-81		•
CM	400	E	80-81		•
CM	400	T	79-81		•
CB	450	SC Nighthawk	82-86		•
CM	450	A, C	82-86		•
CMX	450	Rebel	86-88		•
VT	500	C Shadow	83-86		•
VT	500	ED	82-82		•
CB	550	SC	83-84		•

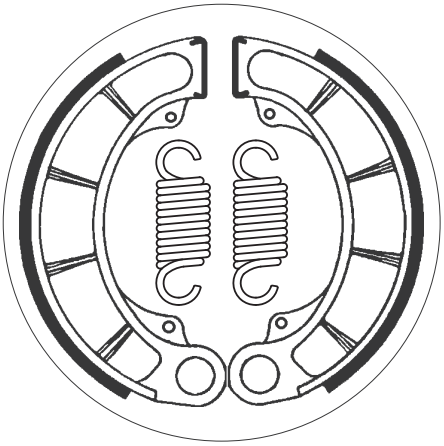

Dimensions in mm / Dimensions en mm
1” = 25.4 mm , 1 mm = 0.04”

ø160 x 40 — SBS 2059

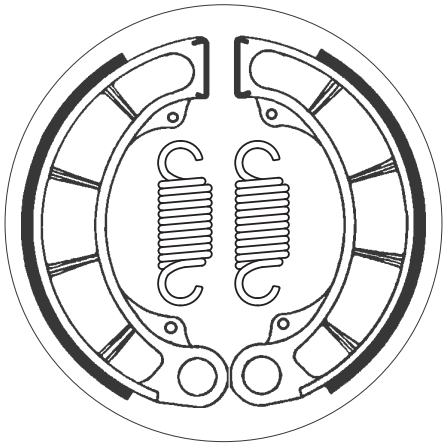

HONDA				
CX	500		78-80	•
CX	500	C	81-82	•
CX	500	Z, A, B	79-81	•
GB	500	T.T.	88-92	•
GL	500	D	81-82	•
GL	500	I	81-82	•
VT	600	C, Shadow	88-00	•
VT	600	CD Shadow		
		VLX	94-00	•
CB	650	SC Nighthawk	83-85	•
CX	650	C	83-86	•
GL	650	D	83-84	•
VF	700	C Magna	84-84	•
VF	700	S	84-85	•
VT	700	C Shadow	84-85	•
CB	750	Nighthawk	91-02	•
VF	750	C	82-84	•

HONDA				
VF	750	Sport	82-83	•
VT	750	C	83-85	•

ø180 x 40 — SBS 2060

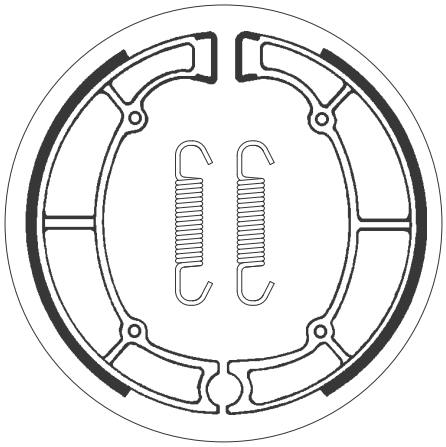

KAWASAKI				
EN	450		85-90	•
EN	500		90-96	•
EN	500		98-04	•
EN	500	Vulcan	96-97	•
KZ	550		80-84	•
KZ	550	A1	80-80	•
ZL	600		85-91	•
ZL	600	B2 Eliminator	95-98	•
KZ	650		77-84	•
KZ	650	F	81-84	•
VN	700	Vulcan	85-85	•
	750	Vulcan	93-94	•
KZ	750		83-84	•
KZ	750	LTD	80-81	•
KZ	750	M1	82-85	•
VN	750	Vulcan	86-94	•
VN	800	Vulcan Classic	96-06	•

KAWASAKI				
VN	800	Vulcan,Classic	95-97	•

ø180 x 40 — SBS 2063

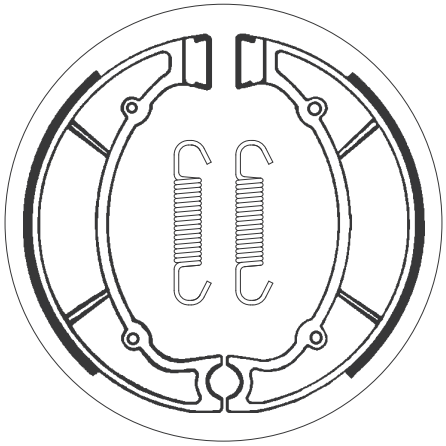

YAMAHA				
TX	500	A, B	74-77	•
XS	500		75-77	•
XV	500	K, Virago	83-83	•
XV	500	SE	83-83	•
XJ	550	Maxim	81-83	•
XZ	550		82-84	•
XZ	550	RJ, RK	82-83	•
XZ	550	S	83-84	•
YX	600	Radian	87-90	•
XV	750	MK	83-83	•
XV	750	SE	81-83	•

Dimensions in mm / Dimensions en mm
1" = 25.4 mm , 1 mm = 0.04"

SBS 2064

ø180 x 30

YAMAHA				
RD	250		73-77	•
RD	350		73-79	•
XS	360	B	76-76	•
XS	650		75-79	•
XS	650	SJ, SK	82-82	•

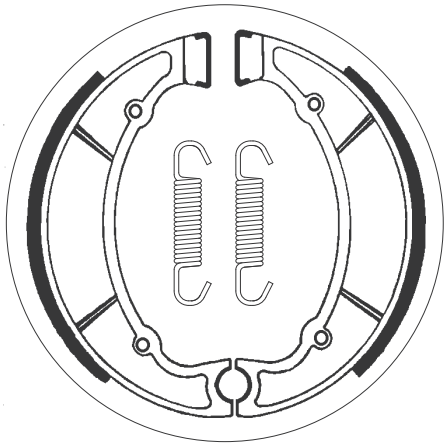

SBS 2065

ø200 x 40

YAMAHA				
XV	535	DX Virago	98-03	•
XV	535	S Virago	96-03	•
XV	535	Virago	87-97	•
XJ	650		80-83	•
XJ	650	G, H, SH Left/Rear	80-83	•
XJ	650	Seca	81-83	•
XJ	650	Turbo	81-82	•
XVS	650	V-Star Classic	98-06	•
XVS	650	V-Star Custom	98-06	•
XJ	700		86-89	•
XV	700	L, LC	84-87	•
XV	700	Virago	87-87	•
TX	750		73-74	•
VF	750	Virago	88-88	•
XJ	750	E	81-83	•
XJ	750	Maxim	82-82	•

YAMAHA				
XJ	750	Seca	81-83	•
XV	750		89-92	•
XV	750	Virago	93-97	•
XV	920	J	82-82	•
XV	1100		94-97	•
XV	1100	Virago	86-93	•

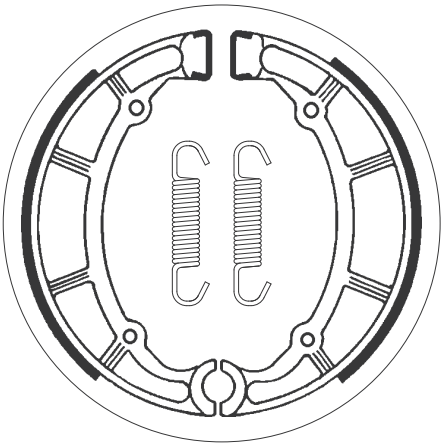

SBS 2066

ø160 x 30

YAMAHA				
XS	250	C	81-81	•
XS	250	D, E	79-80	•
XS	250	SE, SF	80-81	•
YP	250	Majesty	96-04	•
YFM	350	Big Bear Special Edition	99-99	•
YFM	350	FWB L, LC Big Bear	99-99	•
YFM	350	FWH, FWJ, FWK Big Bear	96-98	•
YFM	350	UH, UJ, UK	96-98	•
XS	400		78-85	•
XS	400	DOHC	82-82	•
XS	400	SE Left/Rear	80-81	•
XS	400	SG, SH, SF	80-81	•
YFM	400	FAR Kodiak Automatic	03-03	•

YAMAHA				
YFM	400	Kodiak	93-99	•
XJ	550	Seca	81-83	•
YFM	600	4x4 Grizzly	98-01	•

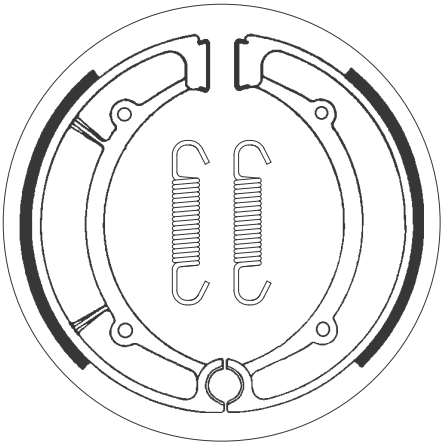

Dimensions in mm / Dimensions en mm
1” = 25.4 mm , 1 mm = 0.04”

ø140 x 30 — SBS 2068

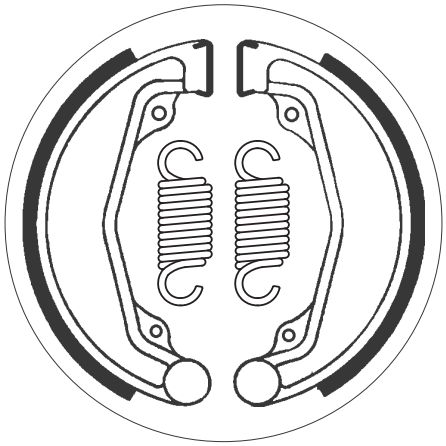

HONDA				
CB	175	K3-K7	74-76	•
VTR	250		88-90	•
XL	500	SB	81-81	•

ø130 x 30 — SBS 2069

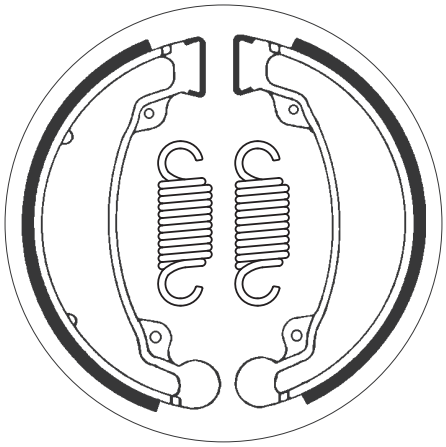

HONDA				
ATC	70	all models	78-85	•
CM	185	T	78-79	•
CM	200	TA, TB	80-82	•
CB	250	Nighthawk	91-02	•
CM	250	C	82-83	•
CMX	250	C Rebel	96-00	•
CMX	250	Rebel	85-12	•

ø160 x 25 — SBS 2070

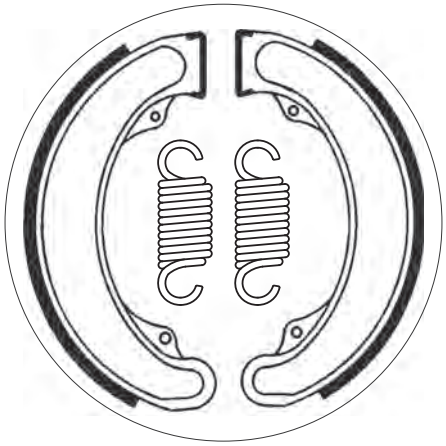

HONDA				
XL	250		78-79	•
XL	350		76-78	•

Dimensions in mm / Dimensions en mm
1" = 25.4 mm , 1 mm = 0.04"

SBS 2071

ø180 x 30

HONDA					
CB	350	K4	74-74	•	
CM	400	E	80-81	•	

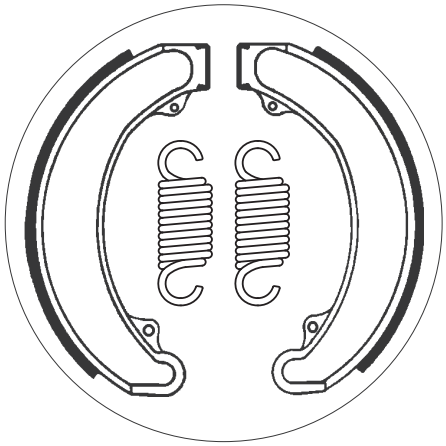

SBS 2072

ø180 x 30

HONDA					
CB	450	K5, K6, K7	72-77		•
CB	500	F	72-75		•
CB	500	T	75-78		•
TRX	500	Foreman, Rubicon	00-09		•
CB	550	F	75-79		•
CB	550	K	74-78		•

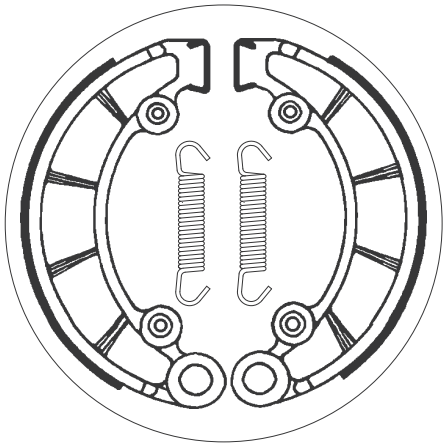

SBS 2074

ø80 x 18

HONDA					
PA	50		78-81		•
PX	50		82-83	•	
QA	50	K1-K3	87-89	•	•
KTM					
SX	50	Adventure	98-03	•	•
SX	50	Pro Junior LC	02-05		•
SX	50	Pro Senior LC	02-03		•
SX	50	Senior Adventure	04-07		•

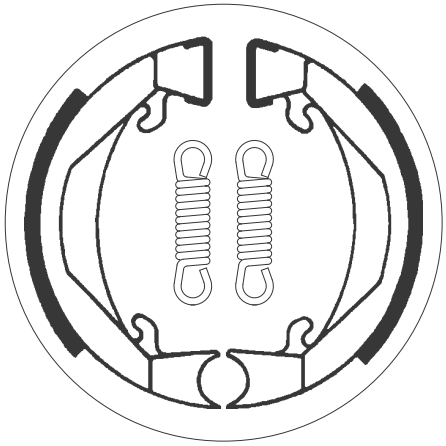

Dimensions in mm / Dimensions en mm
1” = 25.4 mm , 1 mm = 0.04”

ø160 x 25 — SBS 2075

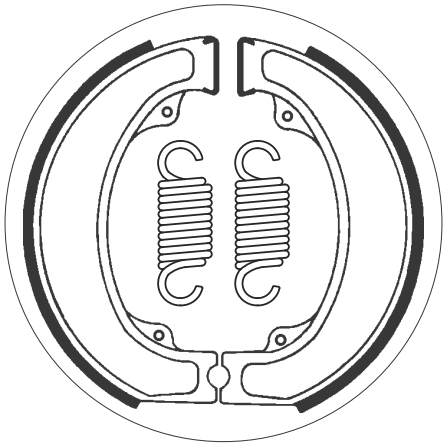

HONDA				
CR	250 RZ, RA	79-80		•
XL	500 SB	81-81	•	

ø130 x 25 — SBS 2077

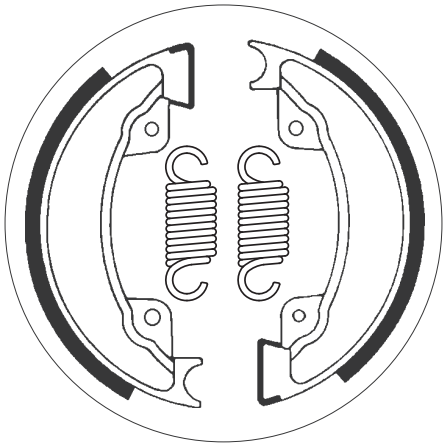

HONDA				
XL	500 RC	82-82	•	

ø130 x 25 — SBS 2082

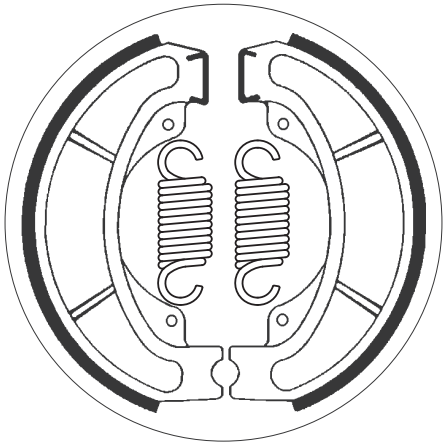

HONDA				
CH	250 Elite	85-86		•

Dimensions in mm / Dimensions en mm
1" = 25.4 mm , 1 mm = 0.04"

SBS 2083

ø130 x 26

HONDA					
TRX	200		90-91	•	
TRX	200	D Type II	91-97	•	
TRX	200	SX	86-88	•	
TRX	250	Recon	97-14	•	

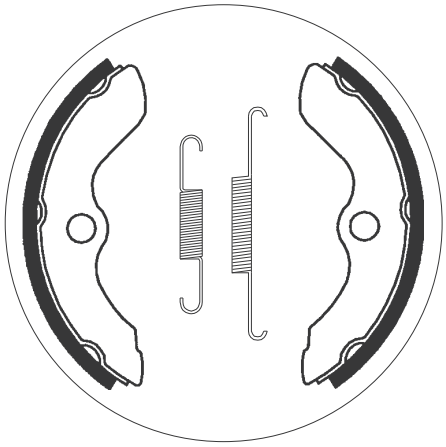

SBS 2085

ø160 x 21

HONDA					
TRX	300	4WD	88-00	•	
TRX	350	Rancher /ES			
		2x4, 4x4	00-09	•	
TRX	400	AT	04-11	•	
TRX	400	FW Fourtrax			
		Foreman	95-02	•	
TRX	450	Foreman ES,			
		Foreman S	98-04	•	
TRX	500	Foreman,			
		Rubicon	00-09	•	
TRX	650	FA Rincon	03-05	•	
TRX	650	FGA Rincon	04-05	•	

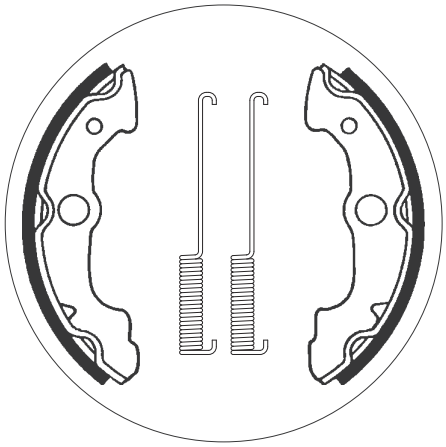

SBS 2087

ø100 x 28

KAWASAKI					
KX	80		79-82	•	•

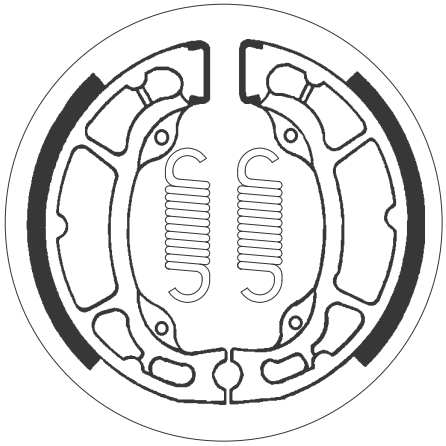

Dimensions in mm / Dimensions en mm
1” = 25.4 mm , 1 mm = 0.04”

ø180 x 30 — SBS 2088

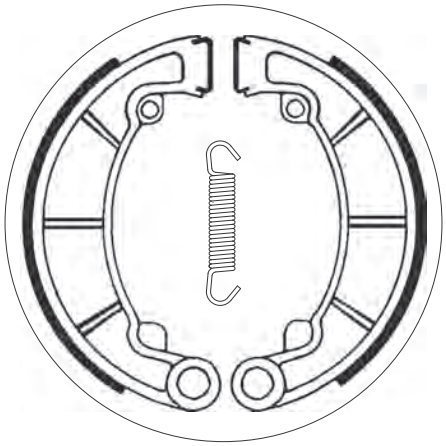

KAWASAKI			
KH	250	76-80	•
S2A	350	73-73	•
KH	400	76-78	•
KZ	400	74-77	•

ø200 x 35 — SBS 2091

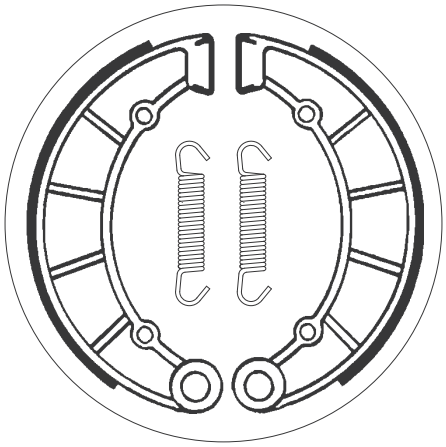

KAWASAKI			
KZ	750 H	72-75	•
KZ	900	76-77	•
KZ	900 A	76-77	•

ø95 x 20 — SBS 2092

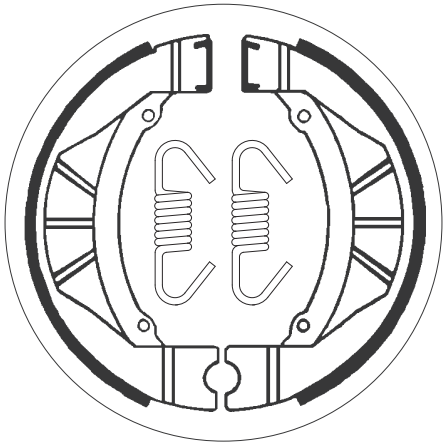

KAWASAKI			
KX	80	83-83	•

Dimensions in mm / Dimensions en mm
1" = 25.4 mm , 1 mm = 0.04"

SBS 2093 — ø90 x 20

KAWASAKI					
KX	60		83-03	•	•
KX	80		83-87		•
KLX	110		02-21	•	
SUZUKI					
RM	60		03-03	•	•
DR-Z	110		02-06	•	

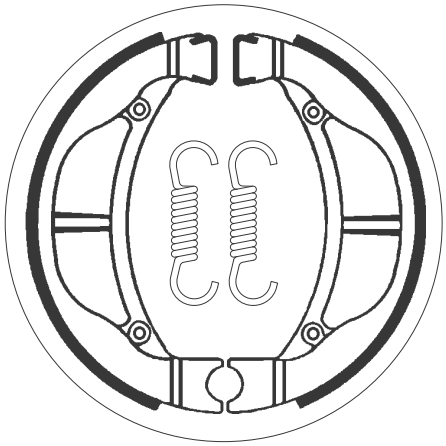

SBS 2097 — ø180 x 28

SUZUKI				
GT	250		73-78	•
GT	380		73-77	•
GT	380	Asco	77-77	•
GS	400		77-82	•

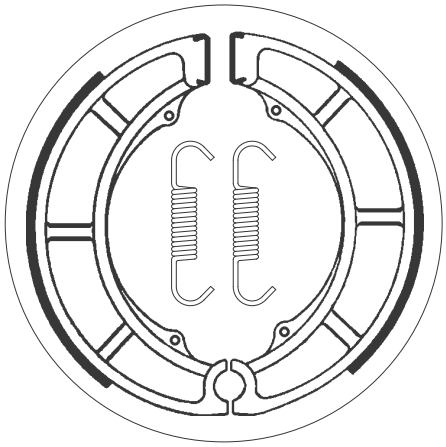

SBS 2098 — ø180 x 40

SUZUKI				
RE		5M, A	75-77	•
LT	250		85-86	•
LT-F	250	4WD V, W Quadrunner	97-98	•
LT	300		87-89	•
GT	500		73-77	•
GT	550		73-77	•
GT	750		73-77	•

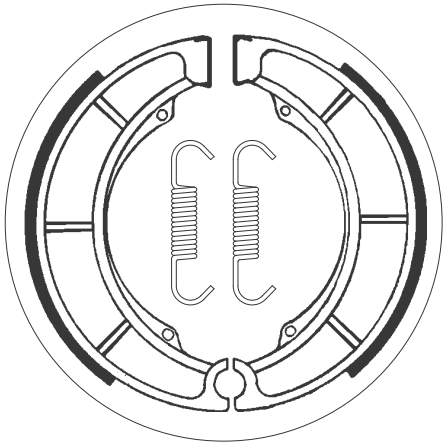

Dimensions in mm / Dimensions en mm
1” = 25.4 mm , 1 mm = 0.04”

ø180 x 32 — SBS 2099

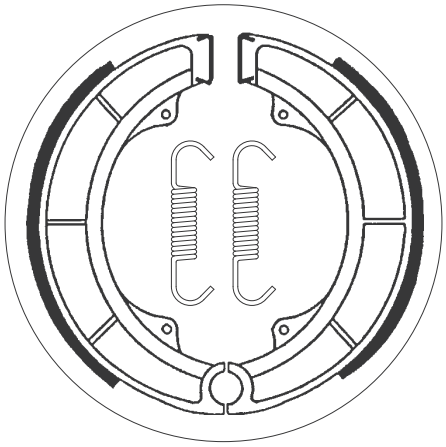

SUZUKI				
GS	550		77-77	•
GT	550		78-78	•

ø80 x 20 — SBS 2101

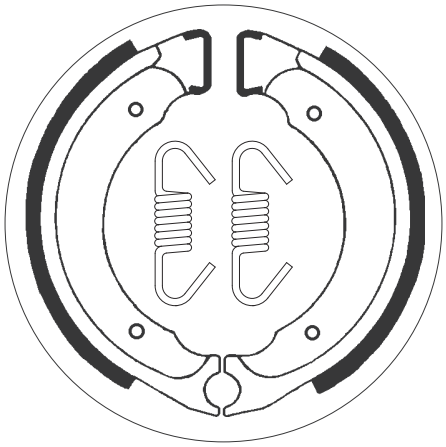

SUZUKI					
FA	50		80-91	•	•
LT-A	50	Quadmaster	01-05	•	
LT-Z	50	Quadsport	06-20	•	
LT	80		87-06	•	

ø120 x 22 — SBS 2102

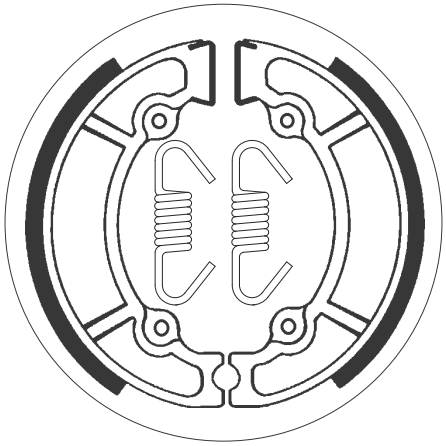

SUZUKI			
RM	125	81-87	•
RM	250	81-83	•

Dimensions in mm / Dimensions en mm
1" = 25.4 mm , 1 mm = 0.04"

SBS 2103

ø120 x 28

SUZUKI					
RG	50	GAG	87-92		•
RG	50	Gamma	90-96		•
RM	100		79-81		•
RM	125		79-80		•

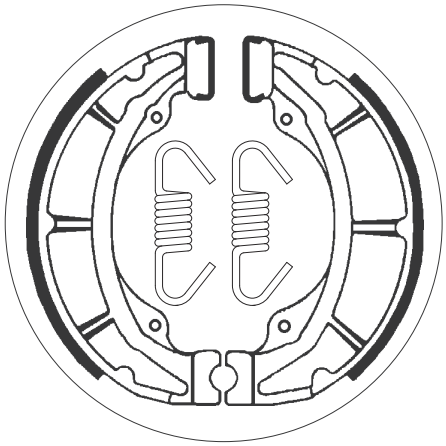

SBS 2104

ø130 x 22

SUZUKI					
LT	80		87-06		•
LT-Z	90	Quadsport	07-14		•
PE	175		82-82	•	
RM	250		80-80	•	
RM	250		84-86		•
RM	400		80-80	•	

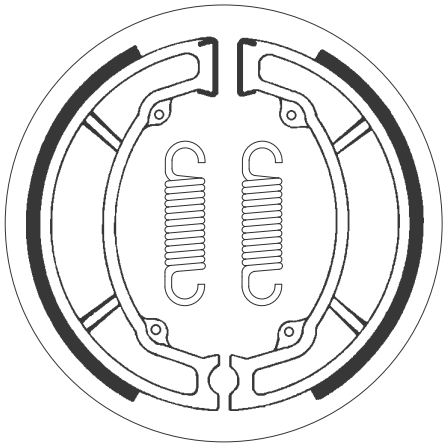

SBS 2107

ø150 x 22

SUZUKI					
ALT	125	D	83-83		•
LT	125	D	83-83		•
RM	250		81-82	•	
RM	465		81-82	•	

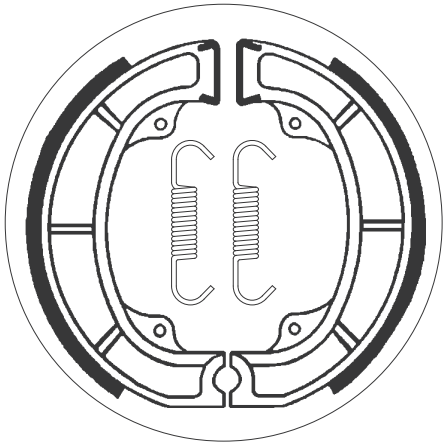

Dimensions in mm / Dimensions en mm
1” = 25.4 mm , 1 mm = 0.04”

ø130 x 22

SBS 2108

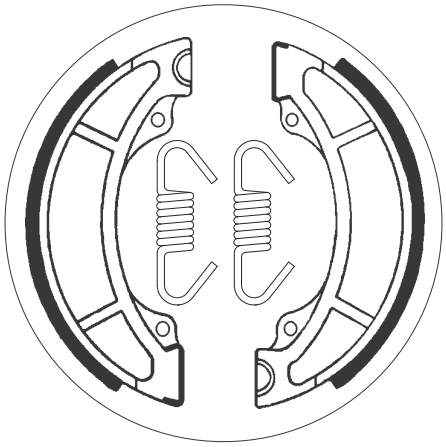

SUZUKI					
RM	125		84-84	•	
RM	250		83-84	•	
RM	500		83-84	•	

ø165 x 28

SBS 2110

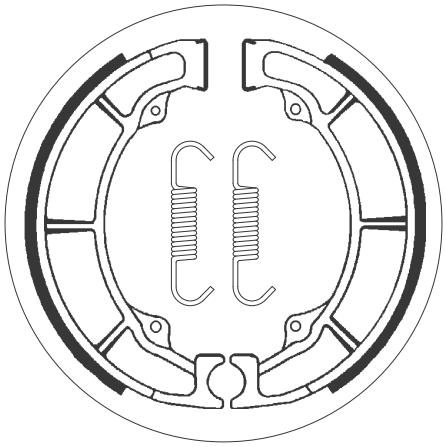

SUZUKI					
LT	250	4WD	87-98		•
LT-F	250		88-01		•

ø80 x 17

SBS 2112

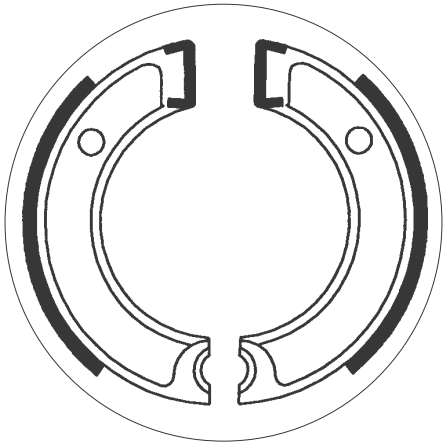

YAMAHA					
CA	50	Riva Salient	83-86	•	
CG	50	A, B Riva Jog	90-91	•	
JOG	50	E	88-90	•	
PW	50		80-87	•	•
PW	50		90-95	•	•
PW	50	H1	96-20	•	•
QT	50	Yamahopper	79-87	•	•
SH	50	E, F Razz	93-95	•	
SH	50	Mint	93-96	•	
SH	50	T,EMT,U,MU, W,MW,A,MA, B,D,MD	87-93	•	

Dimensions in mm / Dimensions en mm
1" = 25.4 mm , 1 mm = 0.04"

SBS 2113

ø180 x 30

YAMAHA					
RD	200	A, B	74-75	•	
XS	250	C	81-81	•	
XS	400		78-81	•	

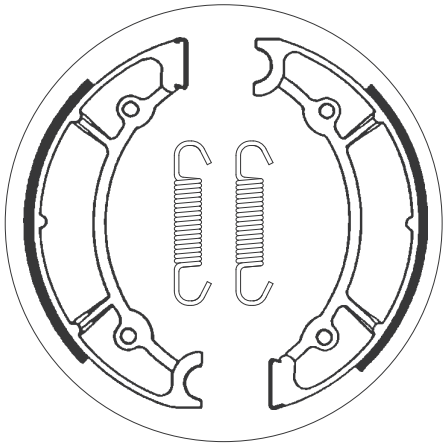

SBS 2114

ø160 x 30

YAMAHA					
YFM	350	FWT, FWU Big Bear	87-88	•	

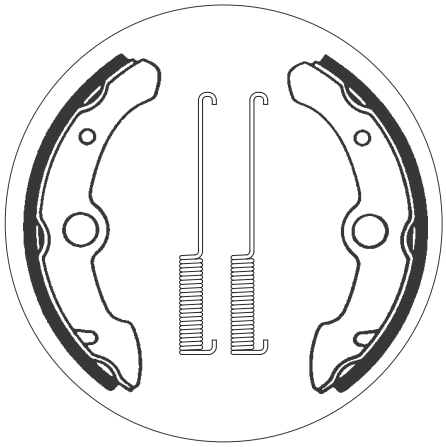

SBS 2115

ø130 x 28

YAMAHA					
XC	125	Beluga, Riva	87-92	•	
XC	180	Cygnus, Riva	83-85	•	
XC	200	Riva	87-91	•	



Dimensions in mm / Dimensions en mm
1” = 25.4 mm , 1 mm = 0.04”

ø162 x 25 — SBS 2116

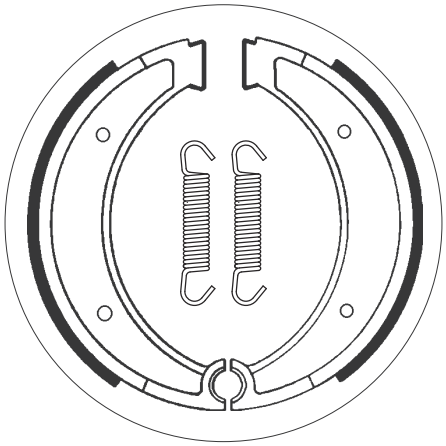

HUSQVARNA					
		all models	72 - 79	•	•
		all models	87 - 88		•
		all models TE,TC,WR, CR,AE	89 - 89		•
CR	125		83 - 84		•
CR/RL	125		81 - 82		•
WR	125		80 - 80		•
XC	125		85 - 85		•
CR	250		81 - 84		•
WR/OR	250		80 - 80		•
WR/OR	390		80 - 80		•
WRX	400		85 - 85		•
	430	Enduro	85 - 88		•
CR	430		82 - 82		•
WR	430		87 - 89		•
CR	500		83 - 84		•

HUSQVARNA				
CX/CR	500		84 - 85	•

ø160 x 30 — SBS 2117

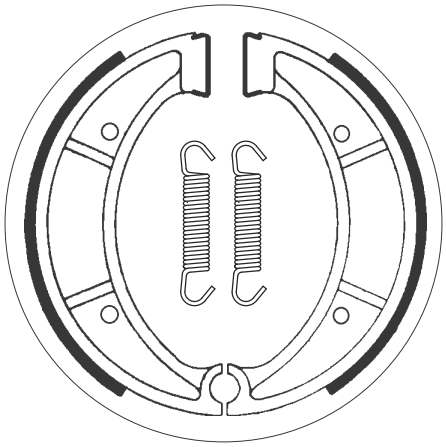

HUSQVARNA					
		all rear drum models	86 - 86		•
CR	125		85 - 90		•
CR/RL	125		81 - 82	•	
WR	125		80 - 80	•	
WR	125		85 - 90		•
WR/XC	125		82 - 82	•	•
WR/XC	125		83 - 84		•
CR	250		81 - 82	•	
CR	250		85 - 87		•
WR/OR	250		80 - 80	•	
WR/XC	250		81 - 82	•	•
WR/XC	250		83 - 84		•
WR/OR	390		80 - 80	•	
WR/XC	390		82 - 82	•	•
	400	Enduro	85 - 88		•

HUSQVARNA				
WR	400		87 - 88	•
	430	Auto	87 - 87	•
CR	430		82 - 82	•
CR	430		87 - 89	•
CR/WR/CS	430		81 - 81	• •
XC	430		87 - 88	•
CR	500		86 - 87	•
TC	500		86 - 86	•
WR/XC/AE	500		83 - 84	•
XC	500		87 - 88	•
	504		83 - 83	•
	510		87 - 89	•
TE	510		86 - 87	•

ø160 x 25 — SBS 2118

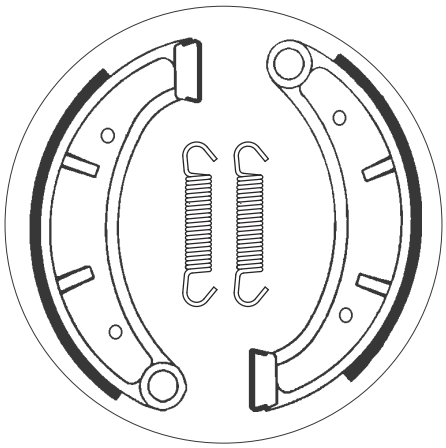

HUSQVARNA				
CR	125		83 - 84	•
WR/XC	125		83 - 84	•
CR	250		83 - 84	•
WR/XC	250		83 - 84	•
WRX	400		85 - 85	•
CR	500		83 - 84	•
WR/XC/AE	500		83 - 84	•

KTM				
	250	Cross	83 - 83	•
	500	Cross	82 - 82	•

Dimensions in mm / Dimensions en mm
1" = 25.4 mm , 1 mm = 0.04"

SBS 2120

ø130 x 30

KTM				
	125	83-83	•	•
GS	125	83-83		•
LL	125	83-83		•
	175	72-78	•	•
	175	79-82	•	
	250 Cross	80-81	•	•

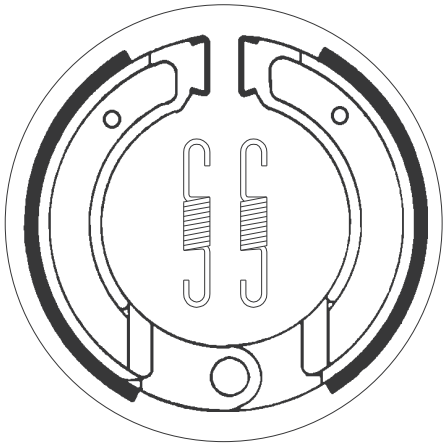

SBS 2121

ø181 x 25

KTM				
	175	79-82		•
	250 Cross	82-82	•	•
	250 Cross	83-83		•
	350 GS	83-85		•
	390 GS	83-83		•
MC	495 Leleu	82-83		•
MX	495 Leleu	82-83		•
	500 Cross	82-82		•
GS	500 500 K4 Enduro	83-83		•

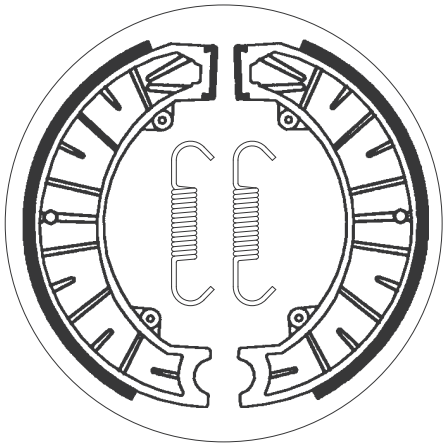

SBS 2122

ø130 x 22

ATK				
ATK	560	84-85		•
KTM				
GS	125	83-83	•	
GS	125	84-85	•	•
LL	125	83-83	•	
MX	125	84-84	•	•
MX	125	85-85		•
XC	125	85-85		•
	250 Baja	86-89		•
	250 Country,Baja	85-85		•
GS	250	83-85	•	•
MX	250	84-84	•	•
MX	250	85-85		•
GS	300	85-85	•	•
MX	300	85-89		•
XC	300 (Drum vers.)	85-85	•	•

KTM				
XC	300	85-85		•
	350 Country Cross	85-85		•
	350 GS (Drum vers.)	83-85	•	•
	390 GS (Drum vers.)	83-83	•	•
GS	420	84-87	•	•
MX	495	84-84	•	•
LC	500	85-85		•
MX	500	83-84	•	•
MX	500	85-85		•
GS	600	84-84	•	•
GS	600	85-85		•

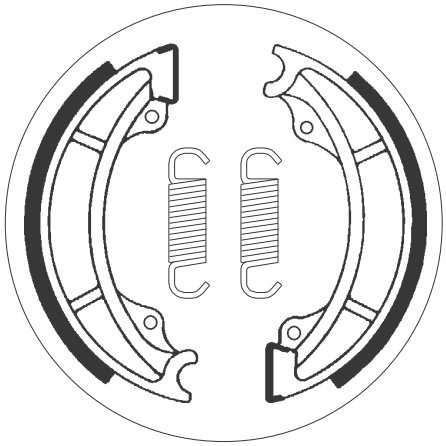

Dimensions in mm / Dimensions en mm
1" = 25.4 mm , 1 mm = 0.04"

ø200 x 30 — SBS 2139

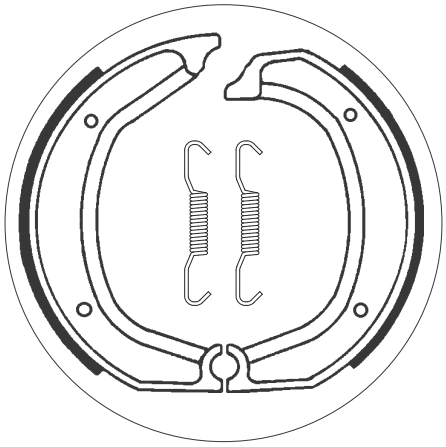

BMW			
R45	450	78-80	•
R60	600 Series	74-80	•
R60/7	600	76-77	•
R65	650	78-80	•
R70	700 Series	74-80	•
R75/6	750	74-76	•
R75/7	750	76-77	•
R80	800	81-81	•
R80/7	800	77-78	•
R90	900 S	73-76	•
R90	900 Series	74-80	•
R90/6	900	73-76	•
R100	1000	79-81	•
R100	1000 S	76-77	•
R100/7	1000	78-80	•

ø200 x 25 — SBS 2140

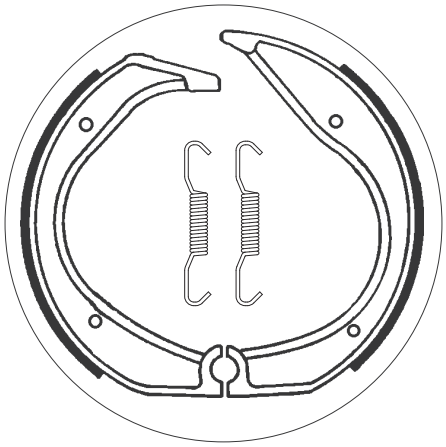

BMW			
R45	450	80-85	•
R65	650	80-80	•
R65	650 GS	87-92	•
K75	750 C	85-88	•
R75	750	86-86	•
	800 Touring	87-87	•
R80	800	77-88	•
R80	800 G/S P.-D.	86-86	•
R80	800 GS	81-87	•
R80	800 GS	91-92	•
R80	800 GS Mystic	91-95	•
R80	800 RT	83-83	•
R80	800 RT	85-85	•
R100	1000 all models	81-84	•
R100	1000 GS	87-94	•
R100	1000 GS Mystic	91-94	•

ø220 x 25 — SBS 2141

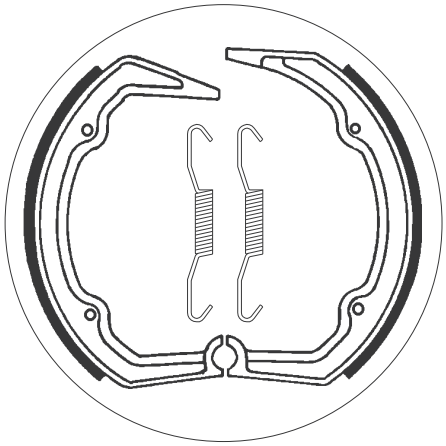

BMW			
R65	650 LS	82-85	•

Dimensions in mm / Dimensions en mm
1" = 25.4 mm , 1 mm = 0.04"

SBS 2143 — ø200 x 27

BMW				
R80	800	R	93-94	•
R100	1000	R	92-95	•
R100	1000	RT	91-95	•

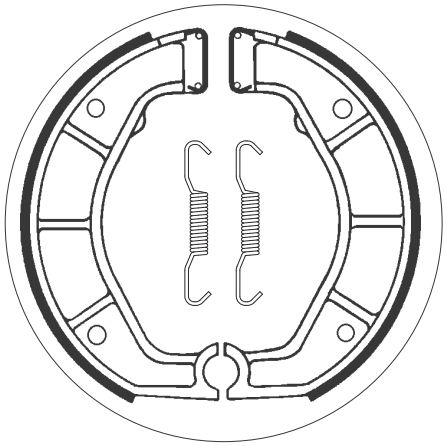

SBS 2177 — ø170 x 27

YAMAHA				
YFU1TW	250	Pro Hauler	89-89	•
YFU1W	250	Pro Hauler	89-90	•
YFP	350	U Terrapro	88-88	•

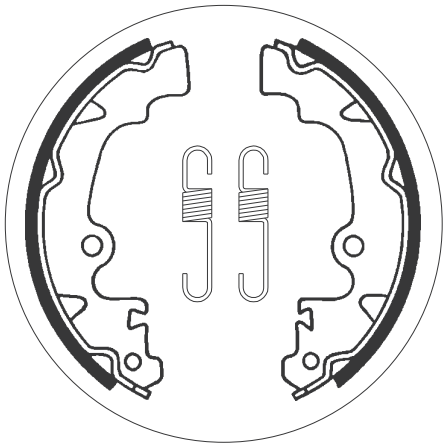

SBS 2178 — ø160 x 25

YAMAHA				
YFM	350	Big Bear Special Edition	99-99	•
YFM	350	FWH, FWJ, FWK Big Bear	96-98	•
YFM	350	FWW, FWA-G Big Bear	89-95	•
YFM	350	UH, UJ, UK	96-98	•
YFM	400	Kodiak	93-99	•

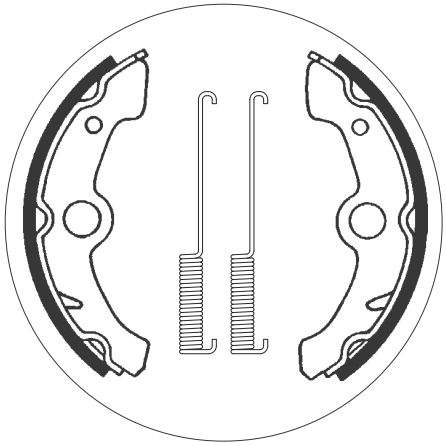

Dimensions in mm / Dimensions en mm
1” = 25.4 mm , 1 mm = 0.04”

ø120 x 25 — SBS 2181

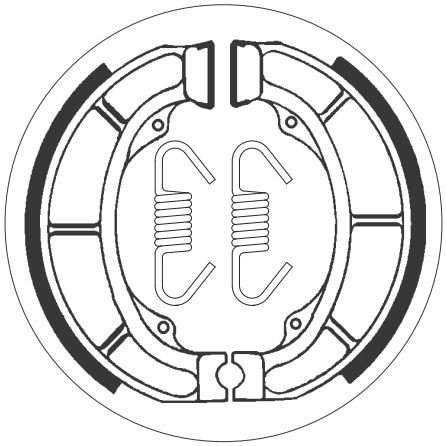

DERBI					
	50	Atlantis	99-08		•
	50	Easy	96-98		•
	50	Hunter	97-99		•
	50	Manhattan	99-99		•
	50	Vamos FL	95-99		•
	50	Vamos L	95-95		•
ST	50	Paddock	96-99		•
SUZUKI					
AH	50	Adress	92-95		•
ZZ	50	Scooter	92-92		•
AH	80	Adress, V, Tune	88-91		•
AH	80	Scooter	92-94		•
AH	100	V Adress	91-94		•
UK	110	Adress	15-19		•
LT	160		89-92	•	
LT-F	160		91-04	•	

ø95 x 20 — SBS 2182

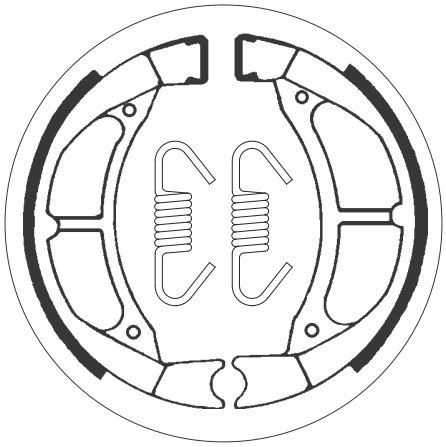

SUZUKI					
RM	80		82-89		•
YAMAHA					
YZ	50		80-83	•	•
YZ	60		85-85	•	•
BW	80		86-90	•	•
YZ	80		74-79	•	
YZ	80		80-85	•	•
YZ	80		86-92		•
TT-R	90		00-10	•	
TT-R	110		08-21	•	

ø130 x 28 — SBS 2183

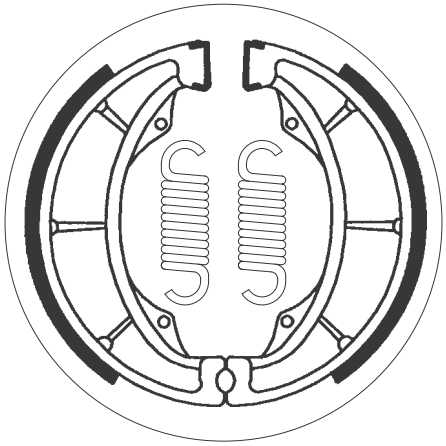

KAWASAKI					
KLF	110	Mojave	87-88		•
KLT	110		84-86		•
KE	125		76-85		•
KX	125		74-82		•
KLT	160		85-85		•
KDX	175		80-82		•
KE	175		76-78		•
KLT	185		86-87		•
KDX	250		83-84		•
KLX	250		79-80		•
KT	250	all models	75-80		•
KX	250		82-85		•
KX	500		83-85		•
KL	600		84-86		•
KLR	600		84-86		•
KLR	600	E	85-94		•

Dimensions in mm / Dimensions en mm
1” = 25.4 mm , 1 mm = 0.04”

SBS 2188

ø110 x 23

SYM			
	125 Husky	96-98	•
	125 Super Duke	95-01	•
	150 Husky	99-02	•
TGB			
	50 202T	99-02	•

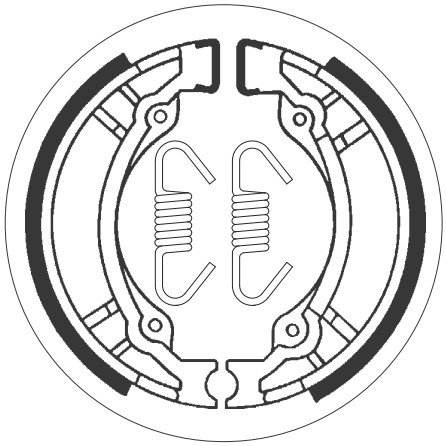

SBS 2189

ø130 x 25

HONDA			
CN	250 Helix	86-87	•

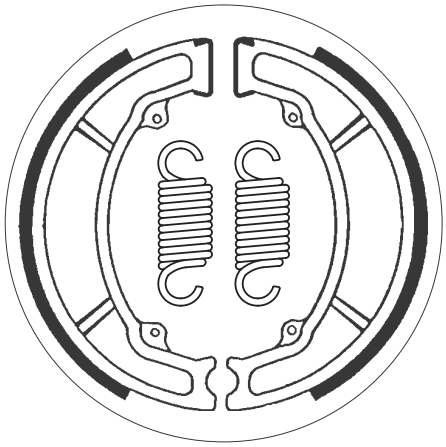

SBS 2190

ø200 x 25

YAMAHA			
SR	500	92-98	•

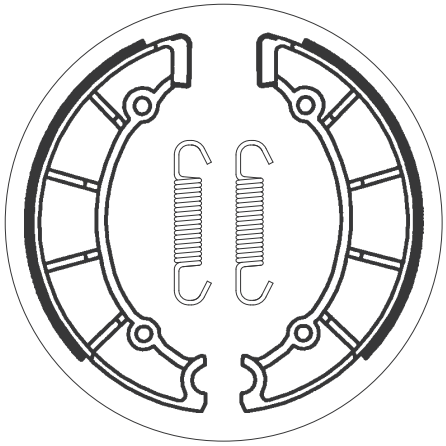

Dimensions in mm / Dimensions en mm
1” = 25.4 mm , 1 mm = 0.04”

ø180 x 35 — SBS 2197

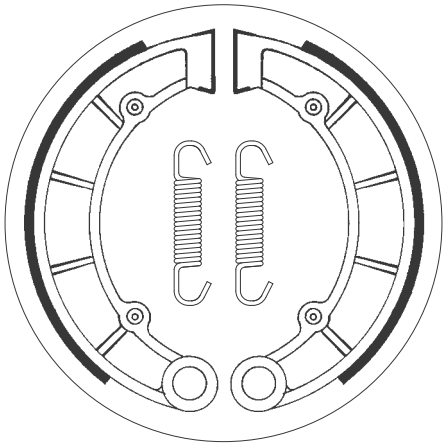

KAWASAKI				
KLF	300	Bayou Left/Rear	89-05	•
KLF	400	Bayou Left	93-99	•
KVF	400	Prairie	97-98	•

ø130 x 28 — SBS 2199

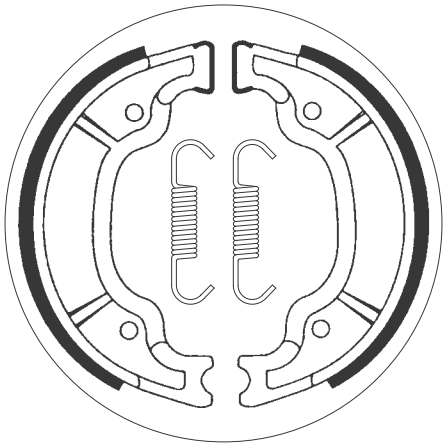

YAMAHA				
YBR	125		08-16	•

ø130 x 28 — SBS 2202

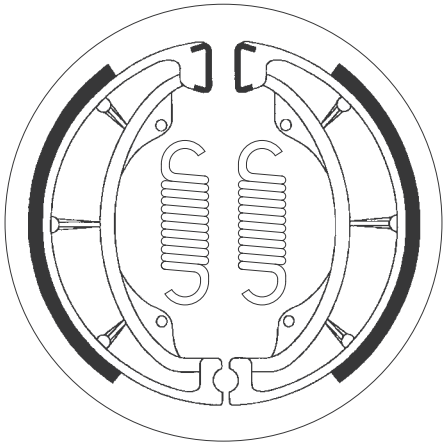

SUZUKI				
UC	125	Epicuro	99-02	•

Dimensions in mm / Dimensions en mm
1" = 25.4 mm , 1 mm = 0.04"

SBS 2203 — ø130 x 25

KYMCO			
	50	Agility (4T) R16	06-15 •
	50	People	99-06 •
	50	Super-8	08-16 •
	125	People	01-09 •
	150	People	01-06 •

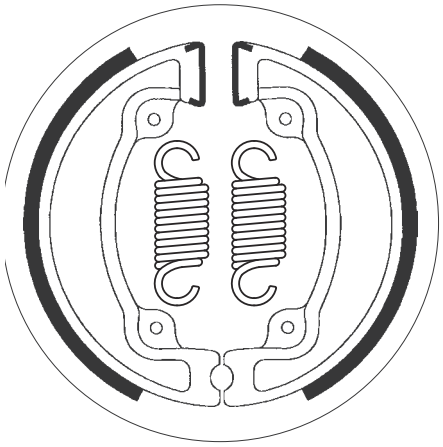

SBS 2205 — ø140 x 25

APRILIA			
SR	125		99-03 •
SR	150		00-03 •
DERBI			
	125	Boulevard	03-07 •
	150	Boulevard	03-09 •
PIAGGIO VESPA			
	100	Fly	07-15 •
	100	Zip	07-10 •
	150	Fly	06-07 •

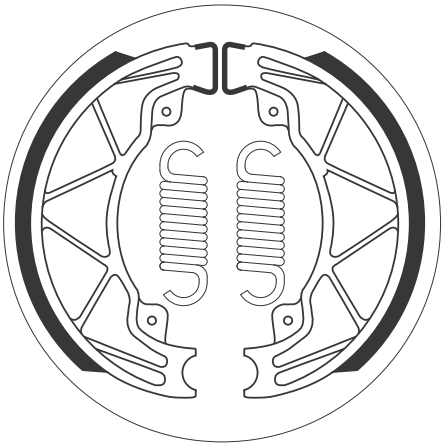

SBS 2206 — ø105 x 25

DERBI			
	50	Aventura	96-96 •
	50	Vamos R (A.J.P. cal.)	95-95 •
	50	Vamos R (Brembo cal.)	95-95 •
	50	Variant Sport-R	01-13 •

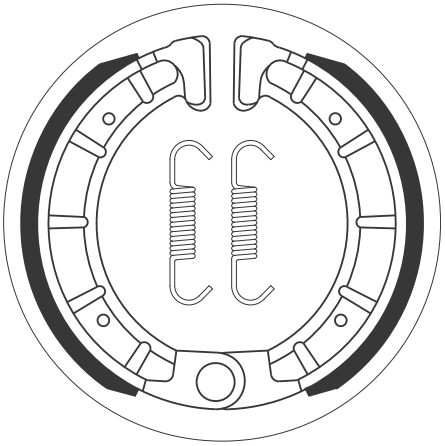

Dimensions in mm / Dimensions en mm
1” = 25.4 mm , 1 mm = 0.04”

ø160 x 30 — SBS 2207

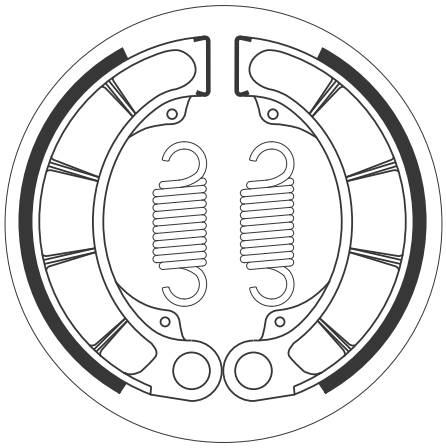

HONDA				
TRX	350	Rancher /ES		
		2x4, 4x4	00-09	•
TRX	400	AT	04-11	•
TRX	400	FW Fourtrax		
		Foreman	95-02	•
TRX	450	Foreman ES,		
		Foreman S	98-04	•

ø130 x 25 — SBS 2208

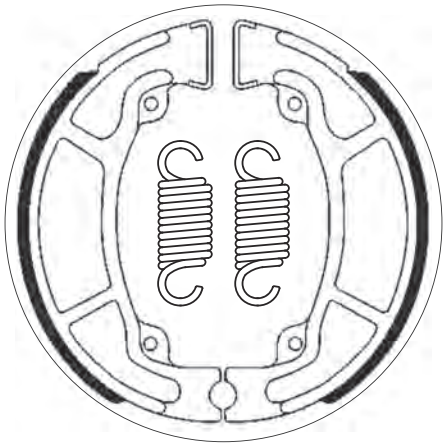

HONDA				
NES	125	@	01-06	•
PCX	125		09-20	•
PCX	125	(Nissin cal.)	18-20	•
PS	125	i	07-13	•
SES	125	Dylan	02-07	•
SH	125		02-08	•
NES	150	@	01-06	•
PCX	150		12-20	•
PS	150	i	07-11	•
SES	150	Dylan	02-06	•
SH	150		02-08	•

ø150 x 28 — SBS 2209

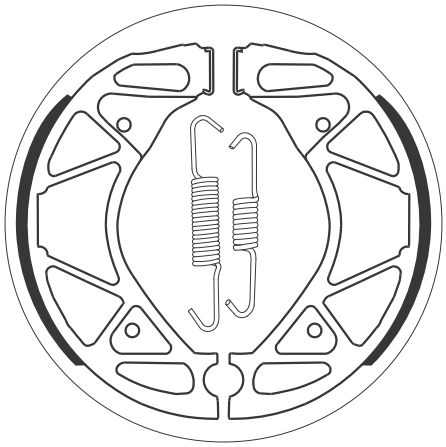

YAMAHA				
	125	Xenter	12-18	•
BWs	125		10-11	•
NXC	125	Cygnus	10-11	•
NXC	125	Cygnus X	05-09	•
YW	125	Z	10-11	•
	150	Xenter	12-18	•

Dimensions in mm / Dimensions en mm
1" = 25.4 mm , 1 mm = 0.04"

ALMOST ANY BIKE

BRAKE PADS, CLUTCH KITS AND BRAKE DISCS

Find the right part with the PRODUCT SELECTOR at SBSBRAKES.COM

sbs

GO AHEAD

HI-TECH BRAKE SOLUTIONS
MADE IN EUROPE



Choose your model

Select the fields in any order

Type | Brand* | CCM* | Model* | Year*

SHOW MATCHES >

NEW SEARCH



FOR TIPS & NEWS - #sbsbrakes | sbsbrakes.com

CROSSLIST

BRAKE PADS
SAME SHAPE / DIFFERENT THICKNESS

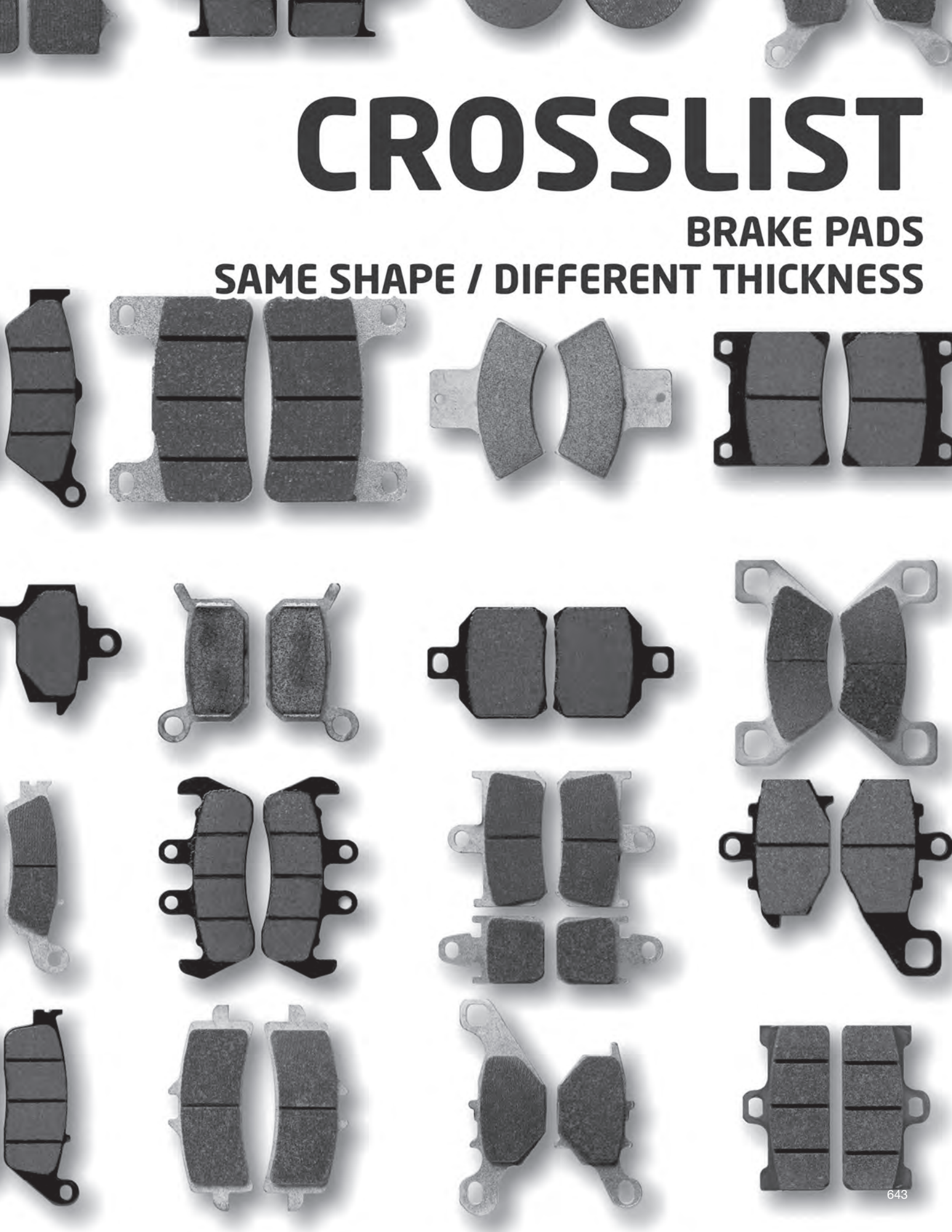

SBS Ref.	Total th.	SBS Ref.	Total th.	SBS Ref.	Total th.	SBS Ref.	Total th.	SBS Ref.	Total th.
103	7.0	200	7.5						
104	7.3	125	9.3						
115	8.0	209	5.3						
119	9.2	134	8.0						
121	9.0	144	9.5						
123	6.3	143	7.0						
125	9.3	104	7.3						
127	9.0	160	11.0						
134	8.0	119	9.2						
142	6.9	202	6.2						
143	7.0	123	6.3						
144	9.5	121	9.0						
160	11.0	127	9.0						
163	9.2	197	8.0						
181	10.4	183	8.1	184	8.9				
183	8.1	184	8.9	181	10.4				
184	8.9	181	10.4	183	8.1				
197	8.0	163	9.2						
200	7.5	103	7.0						
202	6.2	142	6.9						
209	5.3	115	8.0						
216	7.0	222	9.0						
222	9.0	216	7.0						
508	12.0	517	9.5						
517	9.5	508	12.0						
523	10.4	698	7.0						
526	11.0	556	9.0						
539	8.0	540	9.5						
540	9.5	539	8.0						
542	11.0	572	9.0						
551	7.0	814	7.5						
552	8.0	571	9.5						
556	9.0	526	11.0						
558	7.3	709	9.3						
571	9.5	552	8.0						
572	9.0	542	11.0						
581	7.1	582	9.5						
582	9.5	581	7.1						
584	6.5	592	7.5						
590	10.5	613	8.8						
592	7.5	584	6.5						
599	8.0	661	9.0						
600	8.4	647	10.5						
611	8.0	713	9.2						
613	8.8	590	10.5						
614	10.7	881	9.0						
624	8.5	714	7.0						
627	8.1	700	9.6	654	10.4	630	9.6		
630	9.6	627	8.1	700	9.6	654	10.4		
631	8.1	789	13.0						
632	8.7	648	9.5						
638	8.0	688	9.2						
647	10.5	600	8.4						
648	9.5	632	8.7						
654	10.4	630	9.6	627	8.1	700	9.6		
661	9.0	599	8.0						
662	11.0	678	8.0						
671	7.6	742	8.6/10.1	924	9.0				
676	8.2	729	10.0	779	12.0				
678	8.0	662	11.0						
688	9.2	638	8.0						
695	8.3	711	10.2						
698	7.0	523	10.4						
700	9.6	654	10.4	630	9.6	627	8.1		
704	8.3	886	10.9	920	9.8				
709	9.3	558	7.3						
711	10.2	695	8.3						
713	9.2	611	8.0						

Dimensions in mm / Dimensions en mm
1” = 25.4 mm , 1 mm = 0.04”

SBS Ref.	Total th.	SBS Ref.	Total th.	SBS Ref.	Total th.	SBS Ref.	Total th.	SBS Ref.	Total th.
714	7.0	624	8.5						
715	8.0	765	9.0	984	7.2				
721	7.6	722	9.4	735	8.3	736	8.3	880	10.4
722	9.4	735	8.3	736	8.3	880	10.4	721	7.6
729	10.0	676	8.2	779	12.0				
734	7.2	860	9.2	894	7.9				
735	8.3	736	8.3	722	9.4	880	10.4	721	7.6
736	8.3	722	9.4	735	8.3	880	10.4	721	7.6
742	8.6/10.1	924	9.0	671	7.6				
754	9.5	835	8.3						
765	9.0	984	7.2	715	8.0				
767	9.5	836	8.3						
779	12.0	676	8.2	729	10.0				
789	13.0	631	8.1						
805	10.0	887	9.0						
814	7.5	551	7.0						
835	8.3	754	9.5						
836	8.3	767	9.5						
860	9.2	734	7.2	894	7.9				
880	10.4	736	8.3	722	9.4	735	8.3	721	7.6
881	9.0	614	10.7						
886	10.9	704	8.3	920	9.8				
887	9.0	805	10.0						
894	7.9	734	7.2	860	9.2				
920	9.8	704	8.3	886	10.9				
924	9.0	671	7.6	742	8.6/10.1				
984	7.2	765	9.0	715	8.0				

NEW! Get the brake feel you want!

sbs
GO AHEAD

Find the right brake pad compound for you and your bike with the new Compound Selector at sbsbrakes.com

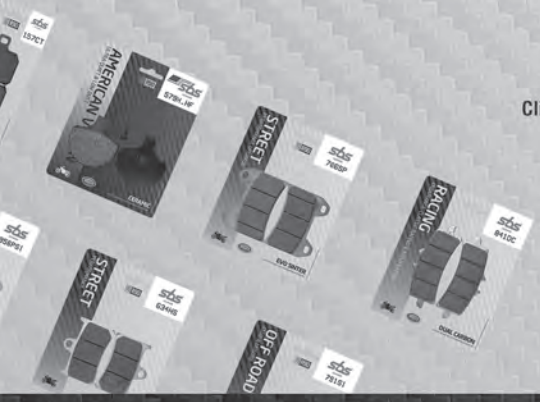

Find the right compound for you and your bike

Click Start Now, answer 2-3 questions and get the answer right away

START NOW





@sbsbrakes | sbsbrakes.com

HI-TECH BRAKE SOLUTIONS
MADE IN EUROPE

CROSSLIST
OE - SBS

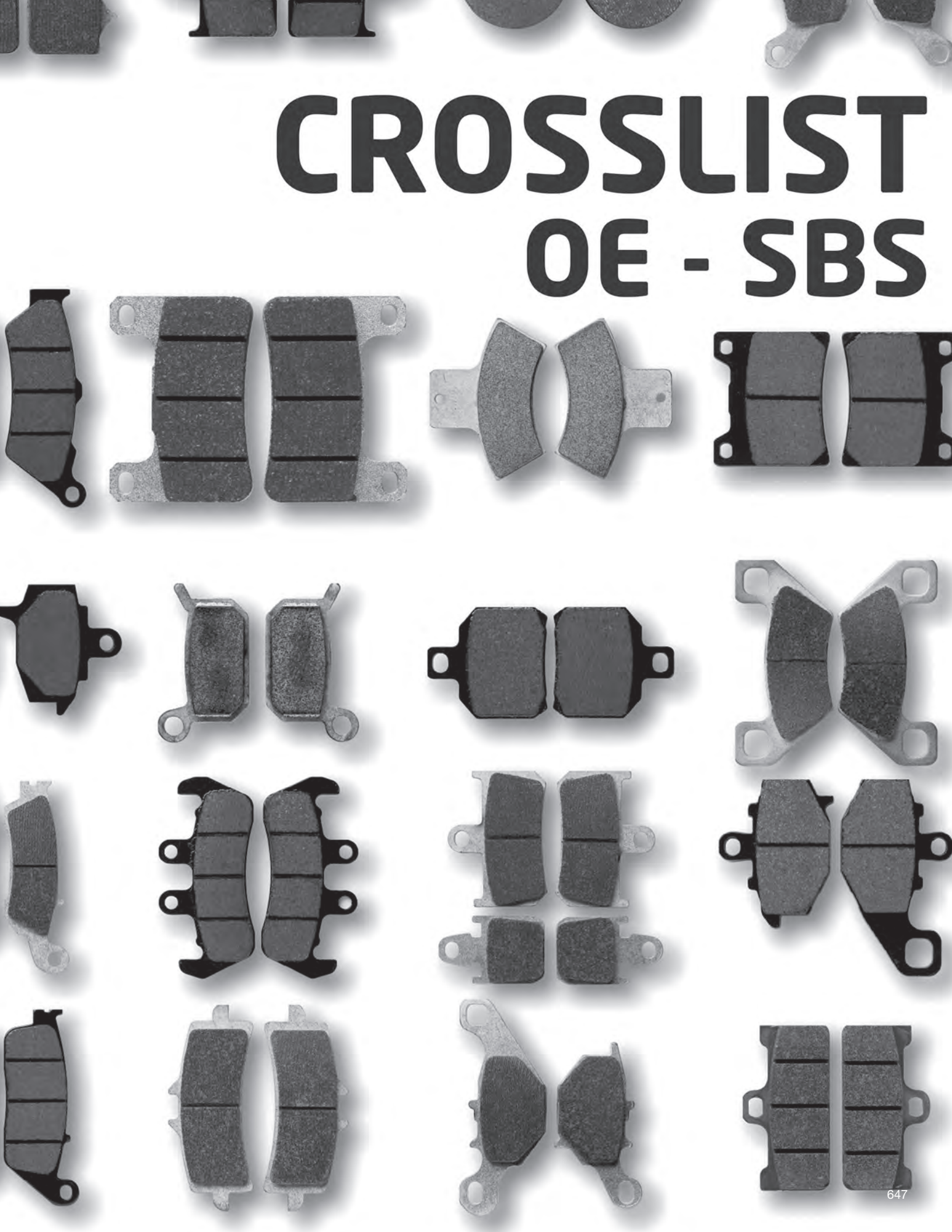

OE No.	SBS No.	OE No.	SBS No.	OE No.	SBS No.	OE No.	SBS No.
0/000-930-0090	585	06435-HA5-670	592	06451-HL3-A00	982	06455-MAS-305	622
0/000-930-7001	773	06435-HN8-006	813	06451-HL4-A01	981	06455-MAT-006	736
000016546300	706	06435-HN8-016	976	06451-HL6-A01	981	06455-MAT-E21	736
0000-365-46000	674	06435-HP1-006	813	06451-HPO-A01	829	06455-MAW-621	654
0000-640-7210	797	06435-HP5-602	592	06451-KZZ-901	859	06455-MAW-761	694
00009300060	559	06435-HP6-A01	829	06452-HL4-A01	981	06455-MAY-000	694
00009300065	652	06435-K01-D11	193	06452-HL6-A01	981	06455-MBB-006	622
00009300080	774	06435-K04-931	193	06452-HPO-A01	829	06455-MBE-006	627
00009308000	730	06435-K26-921	915	06455-371-405	517	06455-MBG-005	736
00025001198	546	06435-K40-F02	193	06455-425-405	526	06455-MBK-751	654
000276-546100	519	06435-K40-F11	193	06455-443-405	572	06455-MBR-006	676
000306546260	674	06435-KBS-W00	588	06455-6CK-006	604	06455-MBT-051	828
000306546300	641	06435-KCZ-000	604	06455-GAV-405	588	06455-MBT-611	736
000306546310	601	06435-KFK-006	614	06455-GBF-J01	592	06455-MBW-006	734
000316546650	519	06435-KFK-016	614	06455-GBZ-701	536	06455-MBW-E11	734
0009307001	559	06435-KPC-641	784	06455-GCC-B52	709	06455-MC5-R01	828
00157056	810	06435-KPC-643	784	06455-GCR-006	688	06455-MCA-006	736
00-1865-4660	506	06435-KPE-016	158	06455-GCS-006	709	06455-MCA-016	736
00276546100	519	06435-KPP-901	784	06455-GCS-016	709	06455-MCB-611	694
00-2865-4601	506	06435-KPP-902	784	06455-GCS-026	709	06455-MCC-006	736
00306546250	671	06435-KRN-711	777	06455-GFM-D31	205	06455-MCH-006	736
00736071800	895	06435-KRN-712	777	06455-GZ8-405	694	06455-MCK-A01	654
00D01210221	559	06435-KSV-J01	193	06455-HP1-006	694	06455-MCS-G01	736
00G01202221	773	06435-KSV-J02	193	06455-HP1-016	694	06455-MCS-G02	736
00G04700141	559	06435-KT7-405	614	06455-K01-D11	654	06455-MCS-R01	828
00H001201221	821	06435-KV3-405	657	06455-K40-F11	654	06455-MCT-691	736
00H01301931	559	06435-KW6-841	688	06455-KBR-731	694	06455-MCW-H01	828
00H01302551	773	06435-KYJ-901	881	06455-KCC-841	951	06455-MCZ-006	622
00H01303551	559	06435-KZ4-J41	777	06455-KCC-842	951	06455-MEA-671	654
00H01304931	773	06435-KZZ-901	915	06455-KCR-405	654	06455-MEH-006	828
00H04702-141	652	06435-MAJ-G41	736	06455-KCZ-000	694	06455-MEL-003	809
00H04703141	774	06435-MAT-006	736	06455-KEB-900	713	06455-MEL-013	809
00H047041-41	730	06435-MAZ-006	715	06455-KEH-900	536	06455-MEL-D22	809
00RTS01A0015	652	06435-MBL-D01	736	06455-KFG-016	722	06455-MET-651	828
00TRS01A0027	802	06435-MCC-006	736	06455-KFG-641	722	06455-MFA-D11	828
00TRS01-A0046	859	06435-MCE-006	715	06455-KFR-701	627	06455-MFA-D12	828
00TRS01A0068	585	06435-MCH-006	736	06455-KN8-405	572	06455-MFJ-D01	809
00TRS01-A0074	859	06435-MCS-G01	736	06455-KPB-406	722	06455-MFR-A01	828
00TRS01A0075	604	06435-MCS-G03	736	06455-KPB-416	722	06455-MGE-006	869
014360258000	774	06435-MCT-405	654	06455-KPC-641	688	06455-MGE-016	869
03613-9666	519	06435-MEE-006	657	06455-KPH-951	797	06455-MGP-081	841
0402-096	758	06435-MEJ-006	657	06455-KPM-006	558	06455-MGS-D31	654
0402-494	758	06435-MEJ-016	657	06455-KPN-E01	688	06455-MGS-D32	654
0402-882	758	06435-MEL-D21	834	06455-KPN-E02	688	06455-MGS-D81	828
0452883	546	06435-MEL-D22	834	06455-KPP-901	797	06455-MJE-D02	627
0453036	544	06435-MEL-D23	834	06455-KR3-000	688	06455-MJF-D02	809
0453200	546	06435-MFF-D01	614	06455-KR3-405	688	06455-MJM-D31	809
0453201	546	06435-MFG-D02	834	06455-KRM-861	536	06455-MJM-D41	947
0454293	544	06435-MFN-D01	862	06455-KSE-006	592	06455-MJP-G51	940
0454440	905	06435-MFN-D02	862	06455-KSE-016	592	06455-MKC-AO1	952
0454444	906	06435-MFN-D11	862	06455-KSS-952	694	06455-MKF-061	841
0454664	905	06435-MFN-D12	862	06455-KSV-J01	828	06455-MKF-D41	947
047-00-2000036	566	06435-MGE-D01	892	06455-KSV-J03	828	06455-MKF-D61	841
04700-2000037	519	06435-MGE-D02	892	06455-KSV-J41	828	06455-MKH-D01	940
0502-019	758	06435-MGS-D31	881	06455-KTK-006	688	06455-MKR-D11	985
0502-604	822	06435-MGY-641	862	06455-KTW-901	828	06455-ML4-P00	593
0502-875	822	06435-MGZ-J01	881	06455-KW6-843	688	06455-ML7-P10	593
06 1894	505	06435-MJM-D01	862	06455-KW6-844	688	06455-MM5-P00	600
06 6005	505	06435-ML7-405	542	06455-KWF-951	797	06455-MR1-405	627
06 6186	505	06435-ML7-415	542	06455-KWN-641	205	06455-MS6-P00	647
0624	671	06435-ML7-P01	654	06455-KYJ-901	627	06455-MT8-405	647
0631	790	06435-MOZ-J01	881	06455-KZL-861	205	06455-MV4	647
06345-MGZ-J01	614	06435-MR7-P00	623	06455-MAB-405	654	06455-MW3-405	627
06431-HL6-A01	975	06435-MS2-P00	654	06455-MAH-405	654	06455-MY1-405	694
06431-MA3-405	859	06435-MS9-405	654	06455-MAJ-G41	736	06455-MY5-731	674
06435-761-405	517	06435-MT3-405	654	06455-MAK-000	674	06455-MY9-871	706
06435-GCM-900	129	06435-MT8-405	542	06455-MAK-003	674	06455-MZ0-760	627
06435-GCM-902	129	06435-MY9-405	614	06455-MAL-G01	627	06455-MZ1-405	622
06435-HA5-405	592	06435-MZO-006	654	06455-MAN-911	674	06455-MAA-405	654

OE No.	SBS No.	OE No.	SBS No.	OE No.	SBS No.	OE No.	SBS No.
06455-NX4-860	782	11967300	773	1J3-20000-13	507	2201398	642
06455-NX7-006	782	11967800	774	1J3-20000-63	507	2201399	755
06456-MAW-761	694	119-69800	713	1J3-20000-64	507	2201685	757
06456-MCA-006	736	11969900	575	1J3-20000-70	507	2201749	757
06456-MCB-611	694	11D-FS811-00	671	1J3-W0045-00	507	2201871	787
06456-MCB-612	694	11H-W0045-00	550	1J3-W0046-00	507	2202097	800
06456-MCC-006	736	11H-W0045-01	550	1J9-20000-02	507	2202411	755
06456-MCW-H01	828	11L-W0045-00	550	1KT-W0046-50	570	2202412	642
06456-MEH-006	828	11U-W0045-00	550	1KT-W0046-51	570	2202413	800
06456-MFF-D01	828	11U-W0045-10	550	1KT-W0046-52	570	2202414	787
07009R	566	12906040	519	1L9-W0045-00	507	2202491	674
07010R	607	1296006	519	1L9-W0046-00	507	2203045	822
0722189	843	1296007	656	1LN-W0045-01	580	2203318	898
072223	843	1296033	656	1LR-W0046-00	589	2203452	642
07-6708-21	706	13D-FS811-00	774	1LX-W0045-00	580	2203628	899
07-684831	695	140330	619	1NL-W0045-00	590	22037-47	897
07-7874-24	805	14140001000E	551	1NL-W0045-01	590	2203792	642
07-8354-24	845	1436-165	822	1P1-W0046-00	754	2203930	898
07-8366-30	889	1436-420	822	1PH-F5806-00	145	2204088	899
07849312/27	791	14654601	506	1RK-W0045-00	590	2205606	899
0784931V27	671	14654650	506	1RK-W0045-50	590	2205949	954
07881950	706	1502-694	822	1RK-W0046-00	590	2206025	970
078819RC	706	153-W0045-10	638	1S3-W0046-00	816	2207667	977
07883050	841	159-07-6340	588	1S4-W0045-00	688	2208161	978
0795-39-856	506	1677	774	1S6-W0045-00	654	22B-FS811-00	627
07-9882-10	841	1679	671	1S9-F530K-00	858	22U-W0045-10	550
07BB2010	730	1799-0078	739	1SC-F5806-00	546	238-070-5-6340	588
07BB2050	730	1799-0079	739	1SD-F5911-00	195	238-07-6340	541
07BB30RC	841	18654660	554	1SD-F5911-10	728	238-076570	574
09130-07E00	730	1910032	717	1U4-W0046-01	507	23W-W0045-01	547
0960-39-656	506	1910036	642	1U4-W0046-02	507	23W-W0045-10	547
0979-39-856	506	1910042	642	1UF-W0045-00	555	240-07-6340	541
0DN00G04700141	559	1910051	717	1UF-W0045-01	555	245-07-6340	574
102-33870	704	1910129	642	1UY-W0045-00	575	25.25362	790
107-28-86-30	519	1910333	642	1UY-W0045-01	575	251-0037-A	551
107-5365-13	519	1910339	755	1UY-W0045-02	575	252-0033A	688
107-6708-21	706	1910450V	757	1UY-W0045-03	575	2525230000	652
107670823	706	1910514	800	1UY-W0046-00	592	252524000	519
107-684830	711	1910683	787	1WD-25805-00	931	2525-242000	519
107-694-936	730	1911171	642	1WD-25806-00	932	2525250000	607
107-861750	671	1911197	898	1XD-25805-00-00	971	2525340000	774
107988210	841	1930626	717	1XD-25805-10-00	972	25-25352	802
107-A225-40	839	1930643	642	1XD-25806-00	638	2525352000	802
107-A486-02	695	1930644	717	1XD-25806-00-00	973	25-25363	896
107-A486-03	711	1930731	642	1XD-25806-10	611	2525371000	747
107-A486-04	805	1930741	717	1XD-25806-10-00	974	25-25373	896
107-A486-48	809	1930815	642	2020073-T0301	624	2547/F/S	519
107-A486-49	841	1930860	755	20S-W0046-00	614	2654F/S/R2	631
107-A486-51	806	19654600	519	211021021	566	266-07-6340	595
107-A486-53	566	1965-4600	519	211021022	519	26H-W0045-00	555
107-A486-55	864	19654601	519	211021038	675	26H-W0045-01	555
114100100000E	585	1A1-W0045-00	504	211041010	566	26H-W0045-10	555
1141-40001-100E	713	1B7-W0045-00	691	211082009	566	26H-W0045-11	555
114140003300A	773	1B7-W0046-00	185	211082010	519	26H-W0046-00	555
1160	773	1B9-W0045-00	194	211082018	706	26H-W0046-01	555
11933400	595	1C3-W0046-00	790	21330710000019	559	27-69173	566
119-363-00	607	1C3-W0046-B0	790	2133071-00003	559	28000214	900
11940100	684	1CO-25806-00	728	214-007-1000002	652	29-001	656
119-419-000	607	1D2-W0045-00	706	219800237	900	29L-W0045-00	550
119-468-000	607	1D4-F5742-00	773	2200418	717	29L-W0045-10	550
119-481-00	722	1D5-F5811-00	774	2200464	717	29L-W0046-01	555
11948600	747	1D7-25806-00	769	2200465	642	2C8-W0045-00	674
119-491-00	747	1D7-W0046-00	769	2200807	756	2CM-F-580500	223
119-493-00	774	1DK-W0045-00	627	2200899	717	2CM-F5805-10	222
119-495-00	774	1FK-W0045-00	555	2200901	642	2CO-25805-00	634
119-52200	519	1FK-W0045-10	555	2201093	755	2CR-25806-00	834
11955600	559	1FK-W0046-01	555	2201149	642	2DL-F5811-00	221
11955700	774	1FK-W0046-02	555	2201170	706	2DP-F580500	226
11966900	559	1J3-20000-11	507	2201189	755	2G2-W0045-00	528

OE No.	SBS No.	OE No.	SBS No.	OE No.	SBS No.	OE No.	SBS No.
2G2-W0045-01	545	34 11 2 314 996	703	38W-W0045-01	575	41300102	734
2G2-W0045-10	545	34 11 2 331 173	703	39P-W0045-00	634	41300161	671
2GH-W0045-00	590	34 11 2 331 175	640	3B4-W0045-00	850	41300169	674
2GH-W0045-01	590	34 11 2 331 177	554	3B4-W0045-10	849	41300197	949
2HC-25805-00-00	979	34 11 2 333 045	703	3B4-W0046-10	851	413610	585
2HC-25806-00-00	980	34 11 2345 445	674	3BN-W0045-00	575	414220	878
2HF-W0046-00	589	34 11 7 651 958	674	3BN-W0045-01	575	41852-08B	830
2HF-W0046-02	589	34 11 7 655 687	703	3C1-F5805-10	858	42029-07	808
2HH-W0045-00	580	34 11 7 658 156	703	3C1-W0045-10	858	42298-08	854
2HH-W0045-01	580	34 11 7 660 340	674	3CL-W0046-00	659	42385-94Y	692
2HR-W0045-00	576	34 11 7 660 448	796	3CS-25805-00	728	42385-98Y	614
2J2-W0046-00	507	34 11 7 663 764	703	3CS-W0045-00	728	42386-84Y	658
2J2-W0046-01	507	34 11 7 671 780	796	3D6-F5811-00	773	42386-984	676
2KJ-W0045-00	550	34 11 7 683 064	796	3D7-W0045-10	627	4252	885
2M0-W0046-00	507	34 11 7 69 65 93	706	3D8-25806-00	769	42739-008	734
2M0-W0046-01	507	34 11 7 697 086	674	3EN-W0045-00	590	42831-04	807
2MP-W0045-00	858	34 11 7 705 216	674	3FV-W0045-00	624	42836-04	808
2NA-W0045-01	619	34 11 7 711 498	706	3FY-W0045-00	575	42850-06	830
2R8-W0045-003	528	34 11 7 717 292	671	3G1-W0046-00	507	43020-CEK-000	638
2UJ-W0045-00	550	34 11 7 717 308	671	3GD-W0045-00	536	43020-S020	657
2UJ-W0045-01	550	34 11 7 728 945	778	3GM-W0045-00	645	43050-001	503
2VN-W0046-00	575	34 11 710 743	841	3GM-W0045-01	645	43050-002	503
2VN-W0046-01	575	34 11 8 405 104	960	3GM-W0045-11	645	43050-005	510
2VW-F0047-00	608	34 11 8 534 183	796	3GM-W0045-50	665	43050-006	510
2XJ-25811-00	637	34 11 8 535 158	900	3H5-W0045-00	507	43050-007	510
305128A-003103	713	34 11 8 540 956	900	3H5-W0045-01	507	43050-008	510
306-25811-00	504	34 11 8 548 028	900	3H6-W0045-00	528	43050-009	510
306-25811-01	504	34 21 1 236 221	506	3HE-W0045-00	555	43050-010	512
306-25811-02	504	34 21 2 314 997	742	3HE-W0045-11	555	43050-011	510
306-25811-03	504	34 21 2 330 633	742	3J6-W0045-01	528	43050-1006	514
306-25811-04	504	34 21 2 332 988	506	3J6-W0045-10	545	43050-1007-A	522
306-25811-05	504	34 21 2 333 337	746	3J6-W0045-11	545	43050-1007-B	522
306-25811-06	504	34 21 2 335 465	742	3JB-W0045-00	616	43050-1008	514
310-292	560	34 21 7 657 025	506	3JD-W0045-00	611	43050-1009	516
31A-W0046-00	555	34 21 7 657 492	746	3JD-W0045-10	638	43050-1010	516
31A-W0046-10	555	34 21 7 660 281	742	3JD-W0046-00	584	43050-1013	512
32176F	848	34 21 7 671 246	746	3JD-W0046-01	584	43050-1021	510
32176G	848	34 21 7 680 374	746	3JD-W0046-10	584	43050-1040	544
3220505A	914	34 21 7 680 375	746	3JH-W0045-00	575	43050-1043	544
322050A	914	34 21 7 717 324	791	3LC-25811-00	624	43050-1044	544
323-627	519	34 21 7 724 609	674	3LC-25811-50	659	43050-1048	544
326-446	519	34 21 8 534 821	674	3LC-W0046-00	659	43050-1051	544
326-478	574	34 21 8 554 424	674	3LD-W0045-10	688	43050-1063	546
326-814	588	34 21 8 556 442	742	3LD-W0045-30	688	43050-1064	546
32D-W0045-00	694	34 21 8 562 163	674	3LD-W0046-01	633	43050-1073	546
3303-446	749	34 71 2 301 359	527	3MA-W0045-00	634	43050-1082	546
3303-908	810	3406-031	592	3MW-W0045-00	624	43050-1126	544
3304-567	749	3406-032	592	3P6-W0046-50	769	43050-1169	544
3305-139	749	3406-075	649	3SH-F5811-00	684	43050-5001	510
3380925	559	341-170	519	3SH-F5811-20	519	43050-5002	514
3380928	559	341878	608	3SP-W0045-00	611	43050-5003	510
33M-W0045-01	555	344839	588	3SP-W0046-00	648	43050-5004	522
33M-W0045-10	555	344-840	575	3TC-W0045-00	624	43051-001	503
34 1 2 301 360	506	3499074	559	3TJ-W0045-00	634	43051-006	510
34 11 1 233 319	520	34L-W0045-10	550	3TJ-W0046-00	570	43051-007	510
34 11 1 238 083	527	34X-W0046-00	575	3UH-W0045-00	575	43051-008	510
34 11 1 354 720	554	34X-W0046-01	575	3UN-W0045-00	589	43051-009	514
34 11 1 451 995	506	34X-W0046-02	575	3XF-W0045-00	555	43051-011	510
34 11 1 454 724	506	3500000	878	3XG-W0045-00	619	43063-83	579
34 11 1 458 388	506	359-1-40-280-0	532	3XL-W0045-00	550	43071-001	503
34 11 2 301 358	520	359-1-40-283-1	532	3XP-W0045-00	611	43082-0002	782
34 11 2 310 494	640	36H-W0046-01	555	3YR-W0045-00	728	43082-0004	687
34 11 2 310 601	554	3710	671	3YX-W0045-00	663	43082-0006	790
34 11 2 310 983	703	3711	791	4084	544	43082-0009	705
34 11 2 310494	684	37A-W0045-00	555	4084-43D-F5906-00	544	43082-001	503
34 11 2 311 175	640	37P-F5811-00	654	409-25811-00	504	43082-0010	704
34 11 2 314 512	703	37P-W0046-00	728	409-25811-01	504	43082-0015	886
34 11 2 314 545	554	38A-W0045-01	555	409-W0045-00	504	43082-0016	631
34 11 2 314 546	640	38W-W0045-00	575	41300053	715	43082-0042	752

OE No.	SBS No.	OE No.	SBS No.	OE No.	SBS No.	OE No.	SBS No.
43082-0043	536	430821031	546	43082-1151	632	43082-1283	704
43082-0048	790	43082-1031	557	43082-1152	694	43082-1286	694
43082-0049	694	43082-1051	546	43082-1157	687	43082-1288	631
43082-0052	886	43082-1056	546	43082-1160	687	43082-1290	782
43082-0055	715	43082-1057	557	43082-1161	597	43082-1291	556
43082-0060	713	43082-1058	530	43082-1162	615	43082-1292	604
43082-0063	886	43082-1059	512	43082-1163	546	43082-5006	592
43082-0069	638	43082-1061	557	43082-1164	544	43082-5010	604
43082-0073	657	43082-1062	557	43082-1167	557	43082-5012	604
43082-0078	798	43082-1063	546	43082-1169	631	43082-S001	702
43082-0079	627	43082-1064	546	43082-1171	687	43082-S005	702
43082-0080	638	43082-1065	544	43082-1172	694	43082-S007	649
43082-0081	688	43082-1066	592	43082-1173	604	43082-S009	694
43082-0082	611	43082-1067	591	43082-1177	705	43082-S011	694
43082-0087	611	43082-1068	597	43082-1178	704	43082-S015	702
43082-0090	604	43082-1069	597	43082-1179	686	43082-S018	704
43082-0091	806	43082-1070	546	43082-1180	556	43082-S019	705
43082-0099	611	43082-1072	602	43082-1181	676	43082-Y001	749
43082-0100	611	43082-1073	546	43082-1182	715	43082-Y003	810
43082-0105	886	43082-1074	597	43082-1187	705	43082-Y004	810
43082-0107-855852	790	43082-1075	615	43082-1188	704	43082-Y005	627
43082-0111	687	43082-1076	615	43082-1189	597	43082-Y006	204
43082-0113	806	43082-1077	597	43082-1191	546	43082-Y007	627
43082-0115	834	43082-1078	602	43082-1193	694	43082-Y008	204
43082-0116	886	43082-1079	544	43082-1194	557	430-82-Y008	204
43082-0117	614	43082-1080	557	43082-1196	726	43-09-11	560
43082-0119	687	43082-1081	544	43082-1199	686	43105-1EE8-305	810
43082-0123	704	43082-1082	592	43082-120	546	43105-461-305	508
43082-0124	886	43082-1083	544	43082-1200	556	43105-461-770	517
43082-0126	638	43082-1084	546	43082-1201	536	43105-461-771	508
43082-0128	688	43082-1085	615	43082-1203	704	43105-461-772	508
43082-0129	782	43082-1086	546	43082-1204	546	43105-ARB-000A	142
43082-0131	734	43082-1087	615	43082-1205	592	43105-GT4-004A	604
43082-0132	694	43082-1088	597	43082-1206	726	43105-GW2-004A	604
43082-0134	216	43082-1089	611	43082-1208	631	43105-HB9-008	558
43082-0138	638	43082-1090	632	43082-1213	687	43105-HE0-305	610
43082-0140	810	43082-1092	546	43082-1218	694	43105-HMA-00DA	847
43082-0144	806	43082-1093	611	43082-1223	705	43105-KBF-3050-MZ	129
43082-0146	611	43082-1094	638	43082-1224	686	43105-KBF-9000	129
43082-0147	806	43082-1095	597	43082-1226	704	43105-KK9-691	598
43082-0150	627	43082-1096	546	43082-1227	686	43105-KN8-007	572
43082-0152	722	43082-1097	631	43082-1228	604	43105-KS6-701A	604
43082-0153	631	43082-1098	556	43082-1230	686	43105-KS6-702A	604
43082-0155	657	43082-1101	615	43082-1232	704	43105-KT7-761A	614
43082-0157	841	43082-1102	631	43082-1234	705	43105-KT7-762A	614
43082-0158	730	43082-1103	556	43082-1235	704	43105-KV3-831	614
43082-0162	841	43082-1104	597	43082-1238	688	43105-KZ1-405	604
43082-0166	657	43082-1110	631	43082-124	694	43105-LBA2-305	212
43082-0167	687	43082-1111	631	43082-1241	536	43105-LDH1-E00	195
43082-0168	782	43082-1113	631	43082-1242	752	43105-LDH-1E00	847
43082-0169	722	43082-1114	597	43082-1243	704	43105-LEA7-305	204
43082-0171	841	43082-1115	544	43082-1244	705	43105-LFC4-305	688
43082-0172	688	43082-1117	611	43082-1246	704	43105-LGE5-305	195
43082-0173	627	43082-1118	632	43082-1248	704	43105-LKF-305	212
43082-0179	713	43082-1120	631	43082-1250	686	43105-MB4-007/017	542
43082-039	886	43082-1123	597	43082-1251	686	43105-MB4-008	542
43082-1001	510	43082-1124	597	43082-1253	686	43105-MB4-305	542
43082-1003	556	43082-1125	615	43082-1255	801	43105-MB6-018/008	542
43082-1004	530	43082-1127	615	43082-1257	556	43105-MG9-007/017	542
43082-1005	510	43082-1129	611	43082-1259	686	43105-MJ6-721/722/723	572
43082-1007	539	43082-1131	632	43082-1260	704	43105-MJ6-724	572
43082-1008	539	43082-1134	597	43082-1265	704	43105-ML7-006	542
43082-1021	539	43082-1137	632	43082-1266	694	43105-ML7-007	542
43082-1022	539	43082-1139	597	43082-1267	604	43105-ML7-017	542
43082-1025	539	43082-1141	556	43082-1272	686	43105-ML7-027	542
43082-1026	539	43082-1142	631	43082-1273	798	43105-ML7-921A	654
43082-1027	546	43082-1144	615	43082-1274	686	43105-ML7-922A	654
43082-1028	536	43082-1147	615	43082-1280	704	43105-MN5-008	542
43082-1029	557	43082-1148	687	43082-1282	705	43105-MN8-006	614

OE No.	SBS No.	OE No.	SBS No.	OE No.	SBS No.	OE No.	SBS No.
43105-MR7-007A	623	43251-KTW-901	193	45105-443-762	572	45105-KR3-014	551
43105-MR7-017A	623	43395-80	543	45105-471-006	526	45105-KR3-601	551
43105-MS2-007A	654	43957-80	553	45105-961-000	592	45105-KR3-602	551
43105-MS9-612A	654	43957-80A	553	45105-961-006	562	45105-KR3-603	551
43105-MT3/6-007	654	43957-86	668	45105-ACL1-305	945	45105-KR3-871	688
43105-MT4-007A	654	43957-86A	668	45105-APA000A	708	45105-KS3-901	588
43105-MT7-405	623	43957-86B	668	45105-BA5-RB10M1	654	45105-KS3-902	588
43105-MT8-008	542	43957-86D	668	45105-BM9-741	618	45105-KS5-004	558
43105-MW0-405	657	43957-86E	668	45105-BM9-742	618	45105-KS5-006	558
43105-MWO-425	657	43D-F5906-01	546	45105-BM9-743	618	45105-KS6-831A	603
43105-MY1-405	614	43F-W0045-00	550	45105-DE3-A00	688	45105-KT7-751	593
43105-MY6-415	604	43F-W0045-01	550	45105-G02-000-AS	708	45105-KT7-761	593
43105-MY7-405	654	44005-74	513	45105-G04-601	558	45105-KT8-004	593
43105-NF5-611	618	44005-78	513	45105-G22-000-AC	708	45105-KTO-405	694
43105-NF5-612	618	44032-77	537	45105-GBF-405	536	45105-KV0-701	647
43105-NN2-600	519	44032-79	537	45105-GC4-601	536	45105-KV6-701	694
43105-NN3-820	803	44063-83A	579	45105-GC4-602/603	536	45105-KW3-405	603
43105-NN3-830	803	44063-83B	579	45105-GE2-004	551	45105-KW3-681	603
43105-SABA-Z00M1	688	44063-83C	579	45105-GE2-006	551	45105-KW6-405	688
43105-SZ2-0000	847	44063-83E	579	45105-GE2-305	551	45105-KW7-405	551
43105-SZ2-0010	847	44082-00	826	45105-GE3-601	536	45105-KY4-901	588
43105-VM0-008	610	44082-00C	826	45105-GE3-602	536	45105-KY4-902	588
43105-VM0-771	610	44135-74	513	45105-GH9-710	618	45105-KY7-008	603
43106-961-006	592	44135-78	513	45105-GM9-743A	618	45105-KZ1-405	603
43106-GT4-004B	604	44203-115-0000	816	45105-GW6-004	536	45105-KZI-405	694
43106-GW2-004B	604	44203-OSB-0000	536	45105-H13-000-AC	708	45105-LB17-3050	810
43106-KS6-701B	604	44209-82	549	45105-H3A-900A	792	45105-LBA2-305	627
43106-KS6-702B	604	44209-82A	549	45105-H7C-700A	749	45105-LBA7-3050	810
43106-KT7-761B	614	44209-87B	669	45105-HA2-671	558	45105-LCA7-305	627
43106-KT7-762B	614	44209-87C	669	45105-H-A3-A-000	792	45105-LDC8-305	713
43106-KV3-831	614	44213-87	669	45105-HA5-671A	603	45105-LDCS-305	749
43106-ML7-921B	654	44281-74	679	45105-HA5-672A	603	45105-LEA-010A	708
43106-MN8-006	614	44442-00	826	45105-HA5-672B	603	45105-LEA1-306	713
43106-MR7-007B	623	44603-0580000	767	45105-HB9-008	558	45105-LEA7-305	627
43106-MR7-017B	623	4466-/-4477	707	45105-HHA-000A	708	45105-LEE-8305	810
43106-SABA-Z00M1	688	45102-393-700	501	45105-KA3-731	558	45105-LEJ2-305	749
43108-H3C-000A	688	45105-006/016/026	572	45105-KAS-415	694	45-105-LFC3-305	546
43108-HMA-000A	663	45105-166-007	536	45105-KAZ-004	627	45105-LFE9-305	945
43108-HWW-000A	847	45105-300-040	502	45105-KB9-960	588	45105-LGE5-305	159
4310A-BA4-000M1	688	45105-323-006	501	45105-KBE-3050-M2	688	45105-LKF-305	844
4312016900B	544	45105-323-013	501	45105-KBS-405	588	45105-LLJ3-305	627
43120-214-00-AEON	906	45105-323-016	501	45105-KCE-3050-M2	713	45105-MA5-671	526
43120-256-000	848	45105-323-023	501	45105-KE1-742	558	45105-MA5-771	561
43120-965-000	562	45105-323-036	501	45105-KE1-743	558	45105-MAS-772	561
43120-HA5-305	592	45105-323-043	501	45105-KE1-744	558	45105-MC7-004	572
43120-HA5-670	592	45105-341-000	502	45105-KECE-305M2	713	45105-MC7-007	572
43120-HC0-007	562	45105-341-003	502	45105-KED9-305	654	45105-MC7-014	572
43121-205-001-AEON	905	45105-341-305	502	45105-KFA6-305	749	45105-MC7-024	572
43150-KBE-3060	688	45105-371-000	517	45105-KFA6-3050	749	45105-MC9-305	561
43150-LDHIE-00	688	45105-390-003	501	45105-KK4-004	551	45105-MG3-006	558
43150-LEA5-306	688	45105-390-006	501	45105-KK4-007	551	45105-ML0-007	593
43150-LLS-3050	688	45105-390-305	501	45105-KK4-014	551	45105-ML4-000	593
431A0-431-673	509	45105-410-004	508	45105-KKD-6305	713	45105-ML4-004	593
431A0-965-000	562	45105-410-006	508	45105-KL8-004	572	45105-ML4-006	593
431A0-965-670	562	45105-410-007	508	45105-KL8-007	572	45105-ML4-008	593
431A0-HA5-670	592	45105-410-016	508	45105-KL8-014	572	45105-ML4-014	593
431A0-HB9-008	558	45105-410-026	508	45105-KL8-712	572	45105-ML4-024	593
431A0-HEO-670	610	45105-410-305	508	45105-KM1-004	558	45105-ML7-006	600
431-A0-MC7-024	572	45105-413-003	526	45105-KM1-007	558	45105-ML7-007	600
431A0-MN5-670	542	45105-413-305	526	45105-KM1-710	558	45105-ML7-017	593
431A0-MT4-670	654	45105-413-871	526	45105-KM1-711	558	45105-ML7-405	627
431A0-VMO-008	610	45105-415-004	508	45105-KM1-712	558	45105-ML7-921/922	627
43211-371-006	509	45105-415-006	508	45105-KN8-007	572	45105-ML7-P10	627
43211-392-006	509	45105-415-305	508	45105-KN8-712	572	45105-MM5-007	600
43211-392-016	509	45105-415-770	508	45105-KR1-861	588	45105-MM5-008	600
43211-431-671	509	45105-415-772	508	45105-KR1-862	588	45105-MM5-017	600
43211-431-672	509	45105-425-003	526	45105-KR1-863	588	45105-MM9-670	572
43211-431-673	509	45105-425-006	526	45105-KR3-004	551	45105-MM9-781	572
43235-FYBQ-300	536	45105-443-761	572	45105-KR3-007	551	45105-MM9-782	572

OE No.	SBS No.	OE No.	SBS No.	OE No.	SBS No.	OE No.	SBS No.
45105-MN4-007	593	45110-J00-P001	585	46630-FYBQ-000	551	4P1-W0045-00	589
45105-MN4-008	593	45110-JHFT-000	544	470-13-030-000	885	4S5-W0045-00	858
45105-MN5-008	647	45110-K2GP-000	713	470-13-090-000	783	4SU-F5811-00	566
45105-MN5-018	647	45110-T80-0000	961	470-13-090-200	783	4SV-W0045-00	634
45105-MN8-006	622	45112-GC4-601	592	470-13090-300	872	4SV-W0045-50	555
45105-MN9-008	647	45112-GC4-831	592	4716630	691	4TP-W0045-00	611
45105-MR1-671	647	451-13-030-000	794	4722090	773	4TR-W0045-00	663
45105-MR7-006	622	45113-REA-300A	810	4730480	728	4TW-W0046-00	659
45105-MR7-612	622	4511A-RAI-000	810	4741-537	523	4US-W0045-00	728
45105-MR7-681	622	45120-107-000	619	47X-W0045-00	555	4W1-W0045-00	547
45105-MS6-901	647	45120-119-00	544	47X-W0045-01	555	4W1-W0045-20	547
45105-MS8-008	647	45120-128-000	585	48-7100-7	575	4W1-W0045-30	547
45105-MS9-612	627	45120-1-68000	544	491-13-409-044	519	4W1-W0046-00	528
45105-MT2-007	647	45120-1-69000	544	494097	142	4W5-W0045-00	545
45105-MT2-008	647	45120-211-000	546	494628	774	4WM-W0045-00	663
45105-MT4-651/405	627	45120-256-000	810	494966	730	4WM-W0046-00	590
45105-MT8-008	647	45120-580-000	706	497002	772	4WV-W0045-00	592
45105-MV4-008	627	45120-J80-000	933	497072	177	4X8-W0045-00	550
45105-MW0-405	622	45120-T40-0000	688	497083	730	4XV-W0045-00	634
45105-MW0-415	622	45120T-580000	713	497116	177	4XV-W0046-00	733
45105-MY6-405	694	45130-L4A300	893	497348	772	4XV-W0046-10	733
45105-MY6-415	694	45130T40-000	713	497395	187	50-005	678
45105-N02-001-A	150	45135-L4A300	893	497396	671	503-13-030-000	671
45105-NF4-000	600	45150-KEG8-3050	713	497417	548	503-13-030-100	671
45105-NN2-900	559	45150-LLB5-3050	688	497429	191	510	506
45-105-NN3-830	802	451A0-HB5-670	592	498840	607	510-015-4-282	559
45105-NN4-K20	939	451A0-HB9-670	603	498846	142	510-362-4-282	595
45105-NX7-006	782	451A0-KA3-731	558	4AJ-W0045-00	559	513506	546
45105-PWA-305	810	451A0-KR3-603	551	4AP-W0046-00	570	514069	544
45105-PWB-1305	822	451A0-MG3-670	558	4B5-W0045-00	634	515049	810
45105-SB3-0001M1	713	451A0-MM8-670	542	4BP-W0045-00	663	515050	810
45105-SEA0000	688	451A0-MN4-670	593	4C8-W0045-00	839	5190-080256	551
45105-TFA-000-A	129	451A0-MT2-670	647	4C9-W0045-00	858	51L-W0046-00	570
45106-300-004	502	451A0-MT4-670	627	4D3-W0045-00	850	51L-W0046-01	570
45106-323-013	501	451A0-MT8-670	647	4D3-W0045-10	849	51L-W0046-02	570
45106-323-016	501	451AO-ML7-670	600	4DA-W0046-00	648	52R-W0045-00	550
45106-323-023	501	45340-107-720-A	525	4EB-W0045-00	691	52S-F5811-00	208
45106-323-036	501	45340-107-721-A	525	4ES-W0045-00	589	53182-ABE1-9000	566
45106-323-043	501	45340-107-722-A	525	4ES-W0046-00	584	54074--10000	536
45106-341-000	502	45340-149-000-A	525	4EW-W0045-00	611	545-13209-044	546
45106-341-003	502	45340-149-003-A	525	4EW-W0045-01	611	546-13-209-044	671
45106-341-305	502	45340-149-720-A	525	4FM-W0045-00	683	546-13-309-200	675
45106-390-003	501	45340-399-700	529	4FM-W0045-10	683	546-13-309-300	675
45106-390-006	501	45340-399-701	529	4FM-W0045-20	555	546-13-309-400	675
45106-390-305	501	45340-399-702	529	4FM-W0045-30	555	548-13-090-000	791
45106-BA5-RB10M1	654	45340-950-000-A	525	4FM-W0046-00	555	548-13-090-100	791
45106-HA5-671B	603	45345-107-720-B	525	4FU-W0045-00	663	548-13-090-300	791
45106-HA5-672B	603	45345-107-721-B	525	4GA-W0045-00	691	55100-23044-08	536
45106-KR3-871	688	45345-107-722-B	525	4GV-F5911-00	671	55120315	627
45106-KS6-701A	603	45345-149-000-B	525	4GV-FS811-00	648	55120P-300000	730
45106-KS6-701B	603	45345-149-003-B	525	4GY-W0046-00	648	55W-W0045-00	596
45106-KS6-831B	603	45345-149-720-B	525	4H7-W0045-00	545	55W-W0045-01	596
45106-KV3-701	622	45345-399-700	529	4H7-W0045-10	545	560584	713
45106-KV6-701	694	45345-399-701	529	4H7-W0045-12	545	56325-R	671
45106-KW3-681	603	45345-399-702	529	4HM-W0045-00	691	565-13209323	621
45106-KY7-008	603	45345-950-000-B	525	4HM-W0045-50	706	565-13209544	621
45106-ML7-922	627	45350-107-720	525	4JG-W0045-00	728	56A-W0046-00	580
45106-ML7-922B	627	45350-107-720-B	525	4K0-W0045-00	507	573-V3-030-000	566
45106-MN8-67-1B	654	45350-950-000	525	4K0-W0045-01	507	585925/A	674
451-06-MR4-901	627	45802-115-0000	816	4K0-W0045-02	507	587-13-030-000	706
45106-MS9-612	627	45815-NAF00	544	4KG-W0045-00	590	59100-01820	597
45106-MS9-612B	654	45815RAM00/01	544	4KG-W045-10	706	59100-02820	544
45106-MT4-651/405	627	45815-RAM-000	546	4KL-F5811-00	575	59100-02821	544
45106-MW3-671	654	45815-RAM-01	546	4KM-W0045-00	663	59100-02830	544
45106-SB3-0001M1	713	460-13-016-000	559	4L3-W0045-00	547	59100-03860	706
45106-SEA0000	688	460-13-090-000	574	4L3-W0045-10	547	59100-05820	688
4510A-KW6-9000	688	46113030-000	783	4MX-W0045-00	611	59100-05830	713
45110-B20T000	544	462-13-030-000	783	4NK-W0045-00	590	59100-06820	577
45110-HB7-007	592	464143	595	4NK-W0046-00	590	59100-07810	688

OE No.	SBS No.	OE No.	SBS No.	OE No.	SBS No.	OE No.	SBS No.
59100-09840	611	59101-33820	704	59300-17810	624	59301-33820	705
59100-09850	611	59101-33830	704	59300-17811	624	59301-33830	705
59100-09860	638	59101-33850	704	59300-18810	503	59301-33840	705
59100-09870	611	59101-35810	631	59300-20830	702	59301-33870	686
59100-09880	638	59101-38810	536	59300-20841	702	59301-36810	694
59100-09890	611	59101-38820	536	59300-20880	702	59301-39810	546
59100-10810	577	59101-38850	536	59300-21820	627	59301-39811	546
59100-11850	515	59101-38860	536	59300-21840	627	59301-39812	546
59100-14830	841	59102-33810	704	59300-21850	627	59301-39841	585
59100-14850	841	59102-33840	704	59300-22830	828	59301-45810	533
59100-14860	841	59102-33870	704	59300-24830	581	59301-45811	533
59100-16820	556	59103-33810	704	59300-26820	546	59301-45850	533
59100-18840	503	59130-00810	577	59300-26830	611	59301-45860	597
59100-18841	503	59130-00A00	577	59300-27810	611	59301-48811	627
59100-19820	620	59130-00A10	577	59300-27830	611	59301-HP7-600	713
59100-20810	577	59130-06B10	577	59300-27850	611	59302-20820	548
59100-20820	577	59130-06B20	577	59300-27860	611	59302-22850	705
59100-21860	627	59130-06C00	631	59300-29820	585	59302-33810	705
59100-21870	627	59130-16700	556	59300-29860	694	59302-33830	705
59100-21890	688	59130-16720	556	59300-33810	546	59302-33850	705
59100-22810	631	59130-16730	556	59300-33850	705	59302-39870	524
59100-22830	828	59130-16740	556	59300-33870	686	59302-45810	597
59100-23830	782	59130-16750	556	59300-33890	686	59302-45830	511
59100-23840	782	59130-16810	556	59300-34830	631	59303-33810	705
59100-24810	620	59130-17C00	624	59300-36810	546	59312-HP7-600	633
59100-26810	597	59130-19C00	620	59300-36811	546	59330-38300	533
59100-29820	806	59130-20C00	620	59300-36820	546	59330-38310	533
59100-29840	806	59130-22D00	631	59300-36821	546	59330-39100	524
59100-29850	806	59130-24A00	577	59300-36822	546	59330-46F00	544
59100-29860	806	59130-24A10	620	59300-36840	503	59330-H99-700	734
59100-30810	577	591-30-26820	546	59300-36850	694	59340-13A00	536
59100-30820	577	59130-26D00	620	59300-36860	694	59340-14500	582
59100-31830	503	59130-27A00	577	59300-36870	694	59340-14501	582
59100-31831	503	59130-27A10	577	59300-36871	546	59340-14510	582
59100-31850	836	59130-30B00	577	59300-37810	548	59340-14600	581
59100-31860	835	59130-30B01	577	59300-39820	524	59340-22A00	536
59100-32820	631	59130-30B10	556	59300-39821	524	59340-24B00	581
59100-33810	546	59130-30B20	556	59300-3K880	694	59340-24B10	581
59100-33812	546	59130-30B21	577	59300-42810	536	59340-39100	524
59100-33820	546	59130-32000	631	59300-42850	592	59340-42A10	536
59100-33830	624	59130-32020	631	59300-42860	592	59340-44A00	536
59100-33850	704	59130-32C00	631	59300-42870	592	59340-46F00	544
59100-33870	704	59130-32C10	631	59300-44810	511	59400-HP7-600	633
59100-34820	515	59130-32C20	631	59300-44820	511	59401-HP7-600	633
59100-34830	631	59130-33C00	624	59300-44821	511	59401-HP7-600	713
59100-34880	951	59130-33C10	624	59300-44822	511	594-13-030-000	843
59100-35830	631	59130-38C00	631	59300-44850	626	5943082-0123	704
59100-35850	631	59130-40C00	624	59300-44860	511	59C-25806-00	169
59100-35880	631	59130-45230	533	59300-44870	536	5AP-W0045-00	627
59100-36830/1	503	59130-45C10	620	59300-45820	515	5AU-W0045-10	663
59100-38820	577	59130-46E00	686	59300-45890	511	5B4-W0045-00	638
59100-38870	536	59130-48B00	620	59300-45891	511	5B4-W0045-10	611
59100-38880	536	59300-03840	591	59300-46810	516	5BK-F-5811-00	607
59100-39810	503	59300-03860	544	59300-46811	516	5BN-W0045-00	663
59100-39850	611	59300-03870	544	59300-46820	516	5CG-W0046-00	728
59100-40810	624	59300-03880	702	59300-46840/830	686	5CG-W0046-20	728
59100-40830	686	59300-03891	702	59300-47810	515	5CH-F5911-00	671
59100-43810	591	59300-04830	546	59300-47820	515	5CP-W0045-00	619
59100-45820	511	59300-04831	546	59300-47830	515	5D7-F5805-00	844
59100-45821	511	59300-05810	533	59300-47840	515	5D7-F5911-00	810
59100-45860	597	59300-06E00	559	59300-47850	515	5D7-FS811-00	671
59100-46820	686	59300-08810	611	59300-47870	515	5D9-W0045-01	858
59100-47890	806	59300-09810	544	59300-47880	515	5DH-W0045-00	694
59101-03810	828	59300-09811	544	59300-49820	534	5DH-W0045-10	694
59101-03820	828	59300-09840	638	59300-49821	534	5DH-WD0046-00	604
59101-09810	702	59300-09850	638	59300-49850	534	5DS-F5811-00	671
59101-14870	841	59300-13830	694	59300-HG5-800	551	5EB-W0046-00	728
59101-26820	627	59300-13860	694	59301-03820	726	5EK-W0045-10	728
59101-33810	704	59300-14830	582	59301-33810	546	5ET-W0046-00	604

OE No.	SBS No.	OE No.	SBS No.	OE No.	SBS No.	OE No.	SBS No.
5GF-W0045-00	611	610113-497417	544	69100-02821	544	69101-44850	881
5GF-W0046-00	648	610143	544	69100-03840	767	69101-44890	833
5GH-W0046-00	754	610164810	915	69100-03880	820	69101-45820	512
5GH-W0046-10	754	613-13-030-000	841	69100-03890	754	69101-45830	512
5GJ-W0046-00	169	61313090000	730	69100-04830	614	69101-45840	512
5GM-W0046-00	728	61321161A	671	69100-05830	556	69101-45850-XNA	512
5HH-W0045-00	713	613-4-004-1-A	566	69100-05860	556	69101-45860-XNA	512
5HH-W0045-10	688	613-4-004-24	566	69100-05870	556	69102-05890	182
5JJ-W0045-00	634	6134005-1A	559	69100-06810	556	69107	671
5JU-W0045-00	619	613-4007-71A	519	69100-06820	657	69116	671
5JW-W0046-00	769	613-4008-1A	519	69100-06830	657	69130-16700	556
5KE-W0045-00	782	613-4-009-1A	566	69100-07810	649	69130-16740	556
5KM-W0046-00	799	61340121A	900	69100-08850	657	69130-20A10	556
5KN-W0045-00	165	613-4-0201-A	706	69100-08860	657	69130-21820	556
5LB-W0045-00	728	613-4-021-1A	730	69100-0BE00	556	69130-21E00	556
5LP-W0045-00	536	613-4-0211-B	706	69100-10820	789	69130-26D00	620
5LP-W0046-00	592	61340-281A	519	69100-10840	182	69130-27A10	556
5LP-W0046-50	592	61340-311A	519	69100-10860	182	69130-30B21	556
5LV-W0046-50	770	613-403-81A	730	69100-12810	635	69130-31E00	701
5MV-W0045-00	694	613-4-038-1A	730	69100-14860	174	69130-33C00	556
5MV-W0046-00	604	613-4-0411-A	706	69100-14890	174	69130-34220	512
5NR-F5811-00	671	613-4-0541A	519	69100-15810	632	69130-34240	512
5NR-F5811-10	730	61340721A	671	69100-15830	833	69130-34C00	556
5NW-W0045-00	190	6134-072-1A	671	69100-15850	833	69130-38820	577
5PA-W0045-00	589	61340731A	519	69100-16851	657	69130-38B00	577
5PA-W0046-00	584	61340751A	674	69100-16852	657	69130-38B10	577
5PS-W0046-00	769	61340791A	841	69100-18810	715	69130-45000	512
5PW-W0046-50	728	61340901A	841	69100-20810	556	69130-45001	512
5R2-W0045-00	550	61340941A	674	69100-21820	556	69130-45010	512
5RM-W0045-10	611	61340951A	730	69100-22820	615	69130-45020	512
5RU-W0045-00	691	61340961A	841	69100-22830	615	69130-45021	512
5RU-W0046-00	185	61341021A	900	69100-22850	615	69130-45030	512
5S7-10045-00	663	61341101A	841	69100-26810	620	69130-45100	512
5S7-25805-00	663	61341231A	841	69100-28820	790	69130-45101	512
5S9-W0045-00	208	61654630	506	69100-29810	715	69130-45990	512
5SE-F5811-00	671	6211	802	69100-31820	633	69130-45C00	620
5SE-F5811-10	671	639-41-054	699	69100-31830	701	69130-45C10	620
5SL-25805-00	634	64098800	619	69100-34860	556	69130-48810	577
5SL-W0045-00	634	647073	142	69100-34870	512	69130-48B00	577
5SL-W0046-00	657	647074	671	6910034890	915	69130-49F00	730
5SU-W0045-00	206	647077	730	69100-35810	790	69140-03D00	632
5SU-W0045-02	206	647078	177	69100-36820	604	69140-05D00	648
5TG-W0046-10	709	647079	187	69100-36830	604	69140-15D00	632
5UG-W0045-00	767	647080	191	69100-36840	604	69140-19A00	592
5UG-W0046-00	816	647157	142	69100-36850	604	69140-19A01	592
5UN-W0046-00	790	647161	772	69100-36860	604	69140-19A10	592
5UN-W0046-50	790	647170	142	69100-36870	604	69140-19A11	592
5UN-W0046-51	790	647171	548	69100-37810	604	69140-26C00	584
5V6-W0045-00	576	647400	191	69100-37830	604	69140-27C10	648
5V6-W0045-01	576	650983	177	69100-38810	577	69140-27C20	648
5VK-W0045-00	674	651253	177	69100-38820	577	69140-28C00	632
5VK-W0046-00	675	651356	142	69100-38840	577	69140-35B00	649
5VN-W0045-00	634	665621	142	69100-38860	577	69140-43840	648
5VU-W0046-01	185	665842	187	69100-38870	577	69140-43B00	649
5VX-25806-00	657	666397	747	69100-40820	715	69140-43B10	649
5VX-W0045-00	691	666574	142	69100-40840	715	69140-43D00	648
5VX-W0046-00	657	666935	159	69100-43820	648	69301-H08-100	747
5VY-W0045-00	634	668017	177	69100-43840	648	69400-37820	604
5WX-W0045-00	774	668021	187	69100-43850	648	7-020-016	638
5WX-W0045-10	559	67131-5EE0-0000	544	69100-44860	635	7-020-022	848
5XC-W0045-00	840	67131-BCAO-0000	638	69100-45890	620	7030-081420	611
5XT-W0045-00	728	690-13-030-000	841	69100-47820	834	7030-081520	546
5XT-W0046-50	632	690-13-090-000	730	69100-47830	834	7030-0853A0	638
5YU-W0046-00	654	690-13-190-000	730	69100-48810	577	7030-0855A0	546
600-13-030-000	674	69095	604	69100-48820	881	7040	803
603-13-130-000	706	69096	604	69101-03810	754	705-600-004	767
6050-080180	713	69096-05	790	69101-03820	835	705-600-014	754
605-08-02-50	575	69100-01810	649	69101-05820	556	705-600-150	767
606-08-02-70	730	69100-01880	886	69101-44810	833	705-600-285	544

OE No.	SBS No.	OE No.	SBS No.	OE No.	SBS No.	OE No.	SBS No.
705-600-349	754	8000-88772	706	8133724	588	903-08-08-80	611
705-600-350	767	800089025	900	8133725	588	903-08-08-90	638
705-600-398	754	8000-901-56	519	8133726	747	9060-080810	638
705600485	908	800094024	676	8133761	159	9060-080910	611
705600-711	908	800094411	566	8133798	588	9100788	694
705601014	910	8000-95280	730	8133815	159	9100797	790
705601015	911	8000-95542	706	8133906	674	99-2769	523
705601149	971	80009634	671	8133943	844	A000-0801A0	705
705601150	972	80009870	676	8213051	574	A000-0801B0	704
715500325	638	8000A2790	791	8213104	574	A000-0802BO	687
715500336	611	8000A7143	671	8213-145	607	A45120-168-000	633
71550036	611	8000A9231	675	821-3145	607	AB024	671
71550335	638	8000B1421	805	821-3197	519	AB024-S	671
715900379	957	8000B1601	841	821-3200	519	AB040	675
715900380	956	8000B1663	841	8213460	153	AB040-S	675
715900386	957	8000B5975	730	8213462	153	ABH-W0045-01	682
715900387	956	8000H4667	794	8213506	747	AM140607	912
736502	544	8000H7132	783	8213577	747	AP8113627	674
737786	559	8000H7138	872	8213648	159	B044201	566
745658	773	802-567-1000	619	830-13-030-100	866	B044202	566
750-13-030-000	706	803.08.01.60	663	830-13-090-100	867	B044223	544
75013090000	675	803138	716	8532279	674	B044224	544
750-13-090-000	675	8044220	821	8537246	706	B22-45230-0000	730
752426	544	8044221	585	8537251	841	B23-45280-0000	747
752816	559	8044601	900	8538735	841	B29-25805-00	840
752817	607	810183	638	860883	671	B2W-25805-00	965
752818	544	8103662	519	862489	730	B5H-25805-00-00	979
753092	559	810K0209	803	862698	730	B5H-25806-00-00	980
753200	559	810K5804	821	862900	773	B74074-100000	848
754605	774	811-3016	519	864121	585	B840C34	878
754804	614	811-3064	519	864342	859	B840F64-6500000	810
754808	722	8113104	574	864428	585	B840F6600000	717
755981-1160	773	811-3118	519	864580	821	BAS-25806-00	584
7-5-601-147	767	8113181	559	865527	859	BC-2500-22065	694
756020	774	811-3196	519	866687	821	BE250022065	694
757215	559	811-3222	519	866692	585	BE-2500-22065	694
7588626	773	811-3283	641	883673	706	BE2500-22068	604
76513030000	675	811-3323	519	8900239	792	BE250122065SM	566
770-13-020-000	671	81133603	159	8900539	749	BE-675002509	790
777-13-030-000	671	8113373	652	890304	546	BQ300222065	671
786764	716	811-3375	651	894047	671	BQ300222068	671
8000-29070	519	8113431	588	894051	585	BT-27922065	815
8000-33545	574	8113478	774	897118	844	BT-280022065	815
8000-37009	574	8113489	601	8A00-461-47	519	BT280222068	803
8000-39730	519	8113523	774	8A0074181	671	BT-6000063012	885
8000-45453	594	8113533	674	8A0079072	675	BT62500GG	963
8000-46147	519	8113538	675	8B0074181	671	BT65003013	939
8000-461-47	519	8113585	566	8C0074181	671	C389	802
8000-59214	641	8113593	671	9010-080510	799	C390	803
800059869	588	8113595	684	9010-0805A0	799	CP42264	719
8000-60195	692	8113604	652	9010-0805B0	799	CP6688D29	805
8000-66785	633	8113627	674	9010-0808B0	914	D06-45230-00-00	559
8000-66796	647	811-3638	519	901-08-03-22	717	EJ29099074	559
800066937	672	811-3651	519	901-08-05-01	799	F000P02030	671
8000-68794	684	811-3662	519	901-08-05-10	799	FZ10176	810
800070854	536	8113720	706	901-08-08-01	914	G71315EE00000	544
800070858	611	8113751	730	901-08-08-10	914	G7131-LRAO-000	847
800070888	611	8113754	706	901-13-030-000	877	GA121001T	559
800071450	611	8113865	588	9021035000	519	GF5359902	544
800071451	592	811-3869	747	9021038000	519	GU01654630	706
800078331	566	8113898	730	90210-55000	566	GU03654600	674
8000-78331	566	8113988	674	90214-01000	601	GU05654630	671
800079072	675	812111	847	9022001000	681	GU27654610	519
800081593	706	812732	559	902203-100	684	GU30654600	566
8000-82748	763	8133516	671	902-300-1000	688	GU30654602	566
800086714	706	8133539	747	902-3002000	713	GU30654626	674
8000-88482	627	8133540	588	9024020000	624	GU30654630	641
800088725	588	8133542	730	9024030000	715	GU30654631	601
8000-88725	588	8133614	706	903-08-08-70	611	GU30654675	671

OE No.	SBS No.	OE No.	SBS No.	OE No.	SBS No.	OE No.	SBS No.
GU31654681	730	R180100127000	730				
GU32654610	706	R235000	559				
GV18654660	554	R290063110000	774				
H0300-2AB	795	R30000126000	706				
H0300F	676	R351	652				
H0300T	654	R43440-311A0	774				
H0300-T	627	R44422001A	730				
IC000760	859	R44440-161A0	747				
IC000818	224	R44440181A0	772				
IC3-W0046-10	790	R800277	544				
IC3-W0046-50	790	R800278	713				
ID9-W0046-00	754	RO50371008000	713				
IS3-W0045-00	611	S10B-40202-00-00	803				
IS3-W0046-10	638	S11D-40202-00	773				
ISC-F5805-00	544	S4311-ARCA000	810				
ISR29-002	655	S4511-ARCA000	810				
K00946315	608	SBR-F5811-00	145				
K00976315	774	SBR-FS811-10	145				
K01303070	773	SEA-W0046-50	733				
K01306075	777	SFL-W0046-50	733				
K01309079	774	SGR-W0046-00	604				
K01310073	585	SM-27300	843				
K4308-0006	790	SVH-W0045-00	691				
K4308-211-96	726	SVU-W0045-10	691				
K4308-21203	704	T01H000101	619				
K4308-21204	546	T-2020071-T301	611				
K4308-21205	592	T-2020072-T301	638				
K4308-21225	694	T2020077	654				
K4308-21241	536	T2020193	624				
K4308-21242	752	T2020194	654				
K4308-21274	686	T2020211	683				
K4308-21286	694	T2020218	683				
KA3495506	575	T2020221	683				
KA3496535	519	T2020245	624				
KA3497506	651	T2020246	624				
KM0961320	803	T2020329	782				
M028Z04	711	T2020393	624				
M049Z04	805	T-2020-475	782				
M1300001500	730	T2020537	654				
M13400001400	706	T2020543	627				
M13400004400	730	T2020553	624				
M1340001400	674	T2020602	614				
M497Z04	841	T2020848	674				
M9467Z04	671	T2021221	864				
N50025061	566	T2021451	841				
P00-927-020-64-07-000	652	T2021541	841				
P150442	559	T2022475	713				
P4064905001002640	551	T2025016	614				
P67660000116700	551	T2025045	713				
PE-745658	773	T2027535	627				
PE756676	142	T2027545	627				
PE757231	774	T2027820	841				
PE757243	142	VGA-12182	908				
PE-758935	713	VGA-12183	908				
PE774896	536	YOOFA1409	708				
PE776-170	551	Z150-9261	908				
PE776171	730						
PE801968	708						
PE-802219	142						
PE-802275	713						
PE802452	544						
PE802576	688						
PE8033443	205						
PE803444	546						
PS-2012-02001	544						
QCA0648860010	544						
R050371008000	774						
R050372080000	747						
R1700-7208-0000	713						

ALMOST ANY BIKE

BRAKE PADS, CLUTCH KITS AND BRAKE DISCS

Find the right part with the PRODUCT SELECTOR at SBSBRAKES.COM

sbs

GO AHEAD

HI-TECH BRAKE SOLUTIONS
MADE IN EUROPE



Choose your model

Select the fields in any order

Type | Brand* | CCM* | Model* | Year*

SHOW MATCHES >

NEW SEARCH



FOR TIPS & NEWS - #sbsbrakes | sbsbrakes.com

BRAKE PINS
FITMENTS, DRAWINGS



			Complete set		
HONDA					
CR	125 R	98 - 01	4000	4506	4505
CR	125 R	02 - 07	4001	4506	4508
CR	250 R	95 - 01	4000	4506	4505
CR	250 R	02 - 07	4001	4506	4508
CRF	250 R	04 - 09	4001	4506	4508
CRF	250 R Efi	10 - 20	4001	4506	4508
CRF	250 X	04 - 14	4001	4506	4508
CRF	450 R	02 - 08	4001	4506	4508
CRF	450 Efi	09 - 12	4001	4506	4508
CRF	450 R Efi	13 - 18	4001	4506	4508
CRF	450 RX Efi	17 - 18	4001	4506	4508
CRF	450 X	05 - 18	4001	4506	4508
HUSQVARNA					
CR	125	05 - 13	4003	4507	4510
TC	125	14 - 18	4003	4507	4510
TE	125	14 - 18	4003	4507	4510
CR	250	05 - 05	4003	4507	4510
FC	250	14 - 18	4003	4507	4510
FE	250	14 - 18	4003	4507	4510
TC	250	04 - 13	4003	4507	4510
TC	250	14 - 18	4003	4507	4510
TE	250	02 - 13	4003	4507	4510
TE	250	14 - 18	4003	4507	4510
TE	300	14 - 18	4003	4507	4510
FC	350	14 - 18	4003	4507	4510
FE	350	14 - 18	4003	4507	4510
FE	350	14 - 18	4003	4507	4510
TC	449	11 - 13	4003	4507	4510
FC	450	14 - 18	4003	4507	4510
FE	450	14 - 18	4003	4507	4510
TE	450	14 - 18	4003	4507	4510
FE	501	14 - 18	4003	4507	4510
FE	501	14 - 18	4003	4507	4510
TE	511	11 - 13	4003	4507	4510
KAWASAKI					
KX	125	95 - 96	4000	4506	4505
KX	125	97 - 08	4002	4509	4505
KX	250	95 - 96	4000	4506	4505
KX	250	97 - 08	4002	4509	4505
KX-F	250	04 - 10	4002	4509	4505
KX-F	250 DFI	11 - 18	4002	4509	4505
KX-F	450	06 - 08	4002	4509	4505
KX-F	450 DFI	09 - 18	4002	4509	4505
KTM					
EXC	125 Enduro	04 - 15	4003	4507	4510
SX	125	00 - 18	4003	4507	4510
SX	144	07 - 08	4003	4507	4510
SX	150	09 - 18	4003	4507	4510
EXC	200 Enduro	04 - 16	4003	4507	4510
SX	200	03 - 04	4003	4507	4510
EXC	250 Enduro	04 - 08	4003	4507	4510
EXC	250 Enduro 4T	04 - 06	4003	4507	4510
EXC-F	250 Enduro	07 - 18	4003	4507	4510
SX	250	03 - 18	4003	4507	4510
SX-F	250	06 - 18	4003	4507	4510
XC	250	06 - 14	4003	4507	4510
EXC	300 Enduro	04 - 08	4003	4507	4510
XC	300	06 - 14	4003	4507	4510
EXC-F	350	11 - 18	4003	4507	4510
SX-F	350	11 - 18	4003	4507	4510
XC-F	350	12 - 18	4003	4507	4510
EXC	400 Racing	00 - 07	4003	4507	4510
SX	400 Racing	00 - 02	4003	4507	4510
EXC	450 Racing	04 - 18	4003	4507	4510
SX-F	450	03 - 18	4003	4507	4510

			Complete set		
KTM					
XC-F	450	06 - 18	4003	4507	4510
XC-F	505	08 - 09	4003	4507	4510
EXC	520 Racing	00 - 02	4003	4507	4510
SX-F	520 Racing	00 - 02	4003	4507	4510
EXC	525 Racing	03 - 06	4003	4507	4510
SX-F	525 Racing	03 - 06	4003	4507	4510
XC-F	525	07 - 07	4003	4507	4510
EXC	530 Racing	08 - 11	4003	4507	4510
SUZUKI					
RM	125	99 - 04	4000	4506	4505
RM	125	05 - 09	4001	4506	4508
RM	250	99 - 04	4000	4506	4505
RM	250	05 - 09	4001	4506	4508
RM-Z	250	04 - 06	4002	4509	4505
RM-Z	250	07 - 07	4000	4506	4505
RM-Z	250	08 - 18	4001	4506	4508
RM-Z	450	05 - 07	4000	4506	4505
RM-Z	450	08 - 18	4001	4506	4508
YAMAHA					
YZ	125	98 - 18	4000	4506	4505
WR	250 F	03 - 13	4000	4506	4505
WR	250 X	08 - 16	4004	4505	4505
YZ	250	98 - 00	4000	4506	4505
YZ	250	01 - 18	4000	4506	4505
YZ	250 F	01 - 13	4000	4506	4505
YZ	250 F Efi	14 - 18	4000	4506	4505
YZ	250 FX Efi	15 - 15	4000	4506	4505
YZ	400	98 - 98	4000	4506	4505
YZ	426 F	00 - 02	4000	4506	4505
WR	450 F	03 - 15	4000	4506	4505
YZ	450 F	03 - 09	4000	4506	4505
YZ	450 F Efi	10 - 18	4000	4506	4505
YZ	450 FX Efi	16 - 18	4000	4506	4505

SBS 4000

HONDA					
CR	125 R	98 - 01	•		
CR	250 R	95 - 01	•		
KAWASAKI					
KX	125	95 - 96	•		
KX	250	95 - 96	•		
SUZUKI					
RM	125	99 - 04	•		
RM	250	99 - 04	•		
RM-Z	250	07 07	•		
RM-Z	450	05 - 07	•		
YAMAHA					
YZ	125	98 - 18	•		
WR	250 F	03 - 13	•		
YZ	250 F	01 - 13	•		
YZ	250 F Efi	14 - 18	•		
YZ	250 FX Efi	15 - 15	•		
YZ	250	98 - 00	•		
YZ	400	98 98	•		
YZ	426 F	00 - 02	•		
WR	450 F	03 - 15	•		
YZ	450 F	03 - 09	•		
YZ	450 F Efi	10 - 18	•		
YZ	450 FX Efi	16 - 18	•		

SBS 4506 SBS 4505

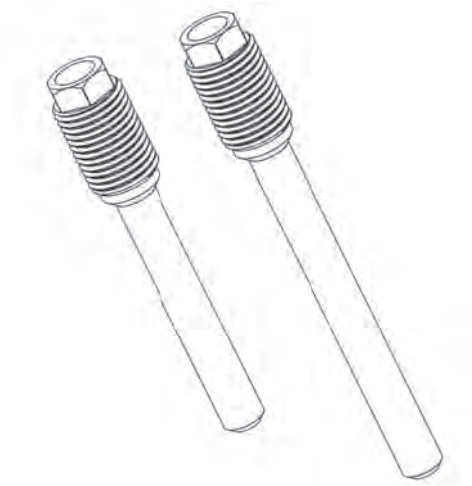

SBS 4001

HONDA					
CR	125 R	02 - 07	•		
CR	250 R	02 - 07	•		
CRF	250 R	04 - 09	•		
CRF	250 R Efi	10 - 20	•		
CRF	250 X	04 - 14	•		
CRF	450 R	02 - 08	•		
CRF	450 Efi	09 - 12	•		
CRF	450 R Efi	13 - 16	•		
CRF	450 RX Efi	17 - 18	•		
CRF	450 X	05 - 18	•		
SUZUKI					
RM	125	05 - 09	•		
RM	250	05 - 09	•		
RM-Z	250	08 - 09	•		
RM-Z	450	08 - 18	•		

SBS 4506 SBS 4508



Dimensions in mm / Dimensions en mm
1” = 25.4 mm , 1 mm = 0.04”

SBS 4002

SBS 4509 SBS 4505

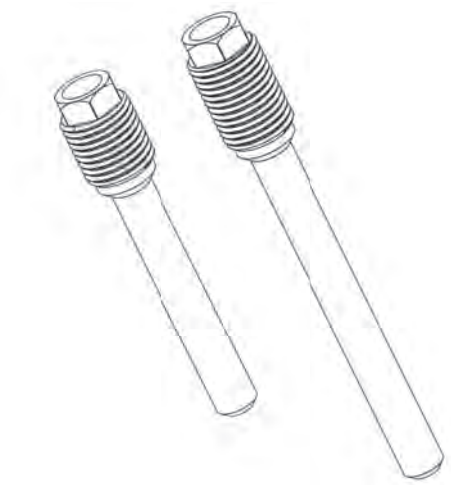

KAWASAKI						
KX	125	97 - 08	•			
KX	250	97 - 08	•			
KX-F	250	04 - 10	•			
KX-F	250 DFI	11 - 18	•			
KX-F	450	06 - 08	•			
KX-F	450 DFI	09 - 18	•			
SUZUKI						
RM-Z	250	04 - 06	•			

SBS 4003

SBS 4507 SBS 4510



HUSQVARNA						
CR	125	05 - 13	•			
TC	125	14 - 18	•			
TE	125	14 - 18	•			
CR	250	05 - 05	•			
FC	250	14 - 18	•			
FE	250	14 - 18	•			
TC	250	04 - 13	•			
TC	250	14 - 18	•			
TE	250	02 - 13	•			
TE	250	14 - 18	•			
TE	300	14 - 18	•			
FC	350	14 - 18	•			
FE	350	14 - 18	•			
TC	449	11 - 13	•			
FC	450	14 - 18	•			
FE	450	14 - 18	•			
TE	450	14 - 18	•			
FE	501	14 - 18	•			
TE	511	11 - 13	•			
KTM						
EXC	125 Enduro	04 - 15	•			
SX	125	00 - 18	•			
SX	144	07 - 08	•			
SX	150	09 - 18	•			
EXC	200 Enduro	04 - 16	•			
SX	200	03 - 04	•			
EXC	250 Enduro	04 - 08	•			
EXC	250 Enduro 4T	04 - 06	•			
EXC-F	250 Enduro	07 - 18	•			
SX	250	03 - 18	•			
SX-F	250	06 - 18	•			
XC	250	06 - 14	•			
EXC	300 Enduro	04 - 08	•			
XC	300	06 - 14	•			
EXC-F	350	11 - 18	•			
SX-F	350	11 - 18	•			
XC-F	350	12 - 18	•			
EXC	400 Racing	00 - 07	•			
SX	400 Racing	00 - 02	•			
EXC	450 Racing	04 - 18	•			
SX-F	450	03 - 18	•			

Applications for this part number continues on following page.

Dimensions in mm / Dimensions en mm
1" = 25.4 mm , 1 mm = 0.04"

SBS 4003

KTM					
XC-F	450	06 - 18	•		
XC-F	505	08 - 09	•		
EXC	520 Racing	00 - 02	•		
SX-F	520 Racing	00 - 02	•		
EXC	525 Racing	03 - 06	•		
SX-F	525 Racing	03 - 06	•		
XC-F	525	07 - 07	•		
EXC	530 Racing	08 - 11	•		

SBS 4507 SBS 4510



SBS 4004

YAMAHA					
WR	250 X	08 - 16	•		

SBS 4505 SBS 4505

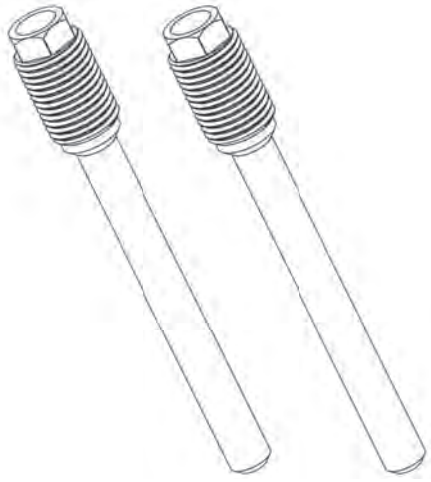

SBS 4505

HONDA					
CR	125 R	98 - 01			•
CR	250 R	95 - 01			•
KAWASAKI					
KX	125	95 - 08			•
KX	250	95 - 08			•
KX-F	250	04 - 10			•
KX-F	250 DFI	11 - 18			•
KX-F	450	06 - 08			•
KX-F	450 DFI	09 - 18			•
SUZUKI					
RM	125	99 - 04			•
RM	250	99 - 04			•
RM-Z	250	04 - 07			•
RM-Z	450	05 - 07			•



Applications for this part number continues on following page.

Dimensions in mm / Dimensions en mm
1” = 25.4 mm , 1 mm = 0.04”

SBS 4505



YAMAHA					
YZ	125	98 - 18			•
WR	250 F	03 - 13			•
WR	250 X	08 - 16		•	•
YZ	250 F	01 - 13			•
YZ	250 F Efi	14 - 18			•
YZ	250 FX Efi	15 - 15			•
YZ	250	98 - 00			•
YZ	400	98 - 98			•
YZ	426 F	00 - 02			•
WR	450 F	03 - 15			•
YZ	450 F	03 - 09			•
YZ	450 F Efi	10 - 18			•
YZ	450 FX Efi	16 - 18			•

SBS 4506

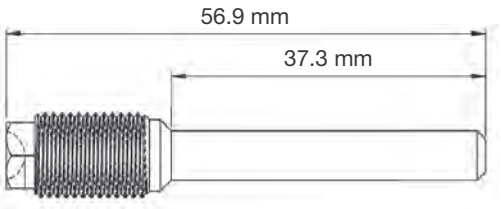

HONDA					
CR	125 R	98 - 07		•	
CR	250 R	95 - 07		•	
CRF	250 R	04 - 09		•	
CRF	250 R Efi	10 - 20		•	
CRF	250 X	04 - 14		•	
CRF	450 R	02 - 08		•	
CRF	450 Efi	09 - 12		•	
CRF	450 R Efi	13 - 16		•	
CRF	450 RX Efi	17 - 18		•	
CRF	450 X	05 - 18		•	
KAWASAKI					
KX	125	95 - 96		•	
KX	250	95 - 96		•	
SUZUKI					
RM	125	99 - 09		•	
RM	250	99 - 09		•	
RM-Z	250	07 - 09		•	
RM-Z	250 Efi	10 - 18		•	
RM-Z	450	05 - 07		•	
RM-Z	450	08 - 18		•	
YAMAHA					
YZ	125	98 - 18		•	
WR	250 F	03 - 13		•	
YZ	250 F	01 - 13		•	
YZ	250 F Efi	14 - 18		•	
YZ	250 FX Efi	15 - 15		•	
YZ	250	98 - 00		•	
YZ	400	98 - 98		•	
YZ	426 F	00 - 02		•	
WR	450 F	03 - 15		•	
YZ	450 F	03 - 09		•	
YZ	450 F Efi	10 - 18		•	
YZ	450 FX Efi	16 - 18		•	

SBS 4507

HUSQVARNA					
CR	125	05 - 13		•	
TC	125	14 - 18		•	
TE	125	14 - 18		•	
CR	250	05 - 05		•	
FC	250	14 - 18		•	
FE	250	14 - 18		•	
TC	250	04 - 13		•	
TC	250	14 - 18		•	
TE	250	02 - 13		•	
TE	250	14 - 18		•	
TE	300	14 - 18		•	
FC	350	14 - 18		•	
FE	350	14 - 18		•	
TC	449	11 - 13		•	
FC	450	14 - 18		•	
FE	450	14 - 18		•	
TE	450	14 - 18		•	
FE	501	14 - 18		•	
TE	511	11 - 13		•	
KTM					
EXC	125 Enduro	04 - 15		•	
SX	125	00 - 18		•	
SX	144	07 - 08		•	
SX	150	09 - 18		•	
EXC	200 Enduro	04 - 16		•	
SX	200	03 - 04		•	
EXC	250 Enduro	04 - 08		•	
EXC	250 Enduro 4T	04 - 06		•	
EXC-F	250 Enduro	07 - 18		•	
SX	250	03 - 18		•	
SX-F	250	06 - 18		•	
XC	250	06 - 14		•	
EXC	300 Enduro	04 - 08		•	
XC	300	06 - 14		•	
EXC-F	350	11 - 18		•	
SX-F	350	11 - 18		•	
XC-F	350	12 - 18		•	
EXC	400 Racing	00 - 07		•	
SX	400 Racing	00 - 02		•	
EXC	450 Racing	04 - 18		•	
SX-F	450	03 - 18		•	
XC-F	450	06 - 18		•	
XC-F	505	08 - 09		•	
EXC	520 Racing	00 - 02		•	
SX-F	520 Racing	00 - 02		•	
EXC	525 Racing	03 - 06		•	
SX-F	525 Racing	03 - 06		•	
XC-F	525	07 - 07		•	
EXC	530 Racing	08 - 11		•	



Dimensions in mm / Dimensions en mm
1” = 25.4 mm , 1 mm = 0.04”

SBS 4508

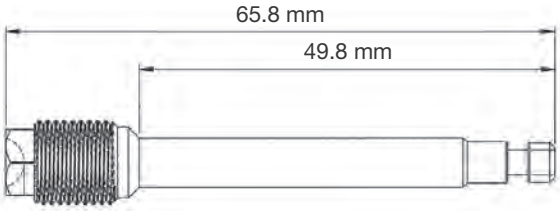

HONDA					
CR	125 R	02 - 07			•
CR	250 R	02 - 07			•
CRF	250 R	04 - 09			•
CRF	250 R Efi	10 - 20			•
CRF	250 X	04 - 14			•
CRF	450 Efi	09 - 12			•
CRF	450 R	02 - 08			•
CRF	450 R Efi	13 - 16			•
CRF	450 RX Efi	17 - 18			•
CRF	450 X	05 - 18			•
SUZUKI					
RM	125	05 - 09			•
RM	250	05 - 09			•
RM-Z	250	08 - 09			•
RM-Z	450	08 - 18			•

SBS 4509

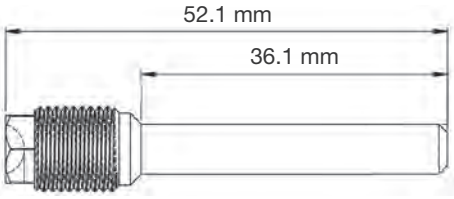

KAWASAKI					
KX	125	97 - 08		•	
KX	250	97 - 08		•	
KX-F	250	04 - 10		•	
KX-F	250 DFI	11 - 18		•	
KX-F	450	06 - 08		•	
KX-F	450 DFI	09 - 18		•	
SUZUKI					
RM-Z	250	04 - 06		•	

Dimensions in mm / Dimensions en mm
1" = 25.4 mm , 1 mm = 0.04"

SBS 4510

HUSQVARNA					
CR	125	05 - 13			•
TC	125	14 - 18			•
TE	125	14 - 18			•
CR	250	05 - 05			•
FC	250	14 - 18			•
FE	250	14 - 18			•
TC	250	04 - 13			•
TC	250	14 - 18			•
TE	250	02 - 13			•
TE	250	14 - 18			•
TE	300	14 - 18			•
FC	350	14 - 18			•
FE	350	14 - 18			•
TC	449	11 - 13			•
FC	450	14 - 18			•
FE	450	14 - 18			•
TE	450	14 - 18			•
FE	501	14 - 18			•
TE	511	11 - 13			•
KTM					
EXC	125 Enduro	04 - 15			•
SX	125	00 - 18			•
SX	144	07 - 08			•
SX	150	09 - 18			•
EXC	200 Enduro	04 - 16			•
SX	200	03 - 04			•
EXC	250 Enduro	04 - 08			•
EXC	250 Enduro 4T	04 - 06			•
EXC-F	250 Enduro	07 - 18			•
SX	250	03 - 18			•
SX-F	250	06 - 18			•
XC	250	06 - 14			•
EXC	300 Enduro	04 - 08			•
XC	300	06 - 14			•
EXC-F	350	11 - 18			•
SX-F	350	11 - 18			•
XC-F	350	12 - 18			•
EXC	400 Racing	00 - 07			•
SX	400 Racing	00 - 02			•
EXC	450 Racing	04 - 18			•
SX-F	450	03 - 18			•
XC-F	450	06 - 18			•
XC-F	505	08 - 09			•
EXC	520 Racing	00 - 02			•
SX-F	520 Racing	00 - 02			•
EXC	525 Racing	03 - 06			•
SX-F	525 Racing	03 - 06			•
XC-F	525	07 - 07			•
EXC	530 Racing	08 - 11			•

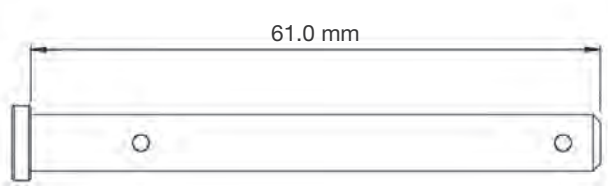

Dimensions in mm / Dimensions en mm
1” = 25.4 mm , 1 mm = 0.04”

Notes

Notes

Notes

Notes

WORLD CHAMPION



SBS 955 DS-1 Dual Sinter

CONGRATULATIONS
Jeffrey Buis

MtM Motoport Kawasaki Racing
WORLD SUPERSPORT 300
2020

#1



Photo Randy van Maasdijk

@sbsbrakes | sbsbrakes.com | #GoAhead

sbs®
GO AHEAD

HI-TECH BRAKE SOLUTIONS MADE IN EUROPE

At SBS, we develop and manufacture hi-tech brake solutions.

Our ranges of brake pads, brake rotors, brake shoes, clutch kits and other important parts cover all relevant motorcycles, scooters and ATV/UTVs on the market, regardless of make and model. SBS is your single source for brake parts and components.

We are a global market leader within brakes for powered two-wheelers. Our R&D department continuously innovates with new materials and technologies to achieve ultimate performance, longer lifetime, higher comfort and more eco-friendly products.

Our products are tested by reality. Dynamometer testing is supplemented with numerous street and race track tests. We work with some of the world's best road racing and motocross riders, when they race towards podium positions.

We create the power to stop you. Made in Europe. You decide where and how to use it. Go Ahead!



6809821100

@sbsbrakes | sbsbrakes.com | #GoAhead